Activity ID: **Orbit** 20 **OAPEL** TV20NANS **SeqNo** 01-

Title UVS/EUV IO TORUS NOON ANSA, C20 OUTBOUND **Instrument** UVS

Requestor UVS-MWG/S.STEPHENS **Team** UVS **Working Group** MWG

Time System CDS **Load ID** 20A **Calendar Date** 05/04/99 Week 70

Start	JEE+CDS 00001393:00:0	99-124/16:29:05.466	JEE+000/23:28:28.666
End	JEE+CDS 00002555:00:0	99-125/12:04:00.133	JEE+001/19:03:23.333
Duration	00001162:00:0	000/19:34:54.667	000/19:34:54.667

Top Label 20TV20NANS01-

Bottom Label (UVS/EUV RTS Io Torus)

Plot Key UVS **Type** SCI

CDS Bytes 1812 **Report Options** BOTH **Scan Platform** Yes

CDS Source OAP **Spin State** DUAL **DMS** No

Observation Objective

EUV MAP OF IO TORUS NOON ANSA, C20 OUTBOUND:
Target: 90 CONE (assumes Earth-pointing); 5.76 Rj ansa ribbon determines CLOCK
From: +8.88 Rj, 124/16:55, GLL-Jup = 17.0 Rj, start EUV torus near Europa ansa
Thru: +6.50 Rj, 125/03:02, GLL-Jup = 21.3 Rj, start UVS (after UVS-AWG JUAURORA)
Thru: +5.78 Rj, 125/05:25, GLL-Jup = 22.6 Rj, ansa ribbon (Sys III W Long xxx)
To: +3.93 Rj, 125/12:08, GLL-Jup = 25.5 Rj, end UVS/EUV (by agreement with HIC)
UVFLUSH STRATEGY (data rate 4.87 bps EUV):
60-RIM UVFLUSHes needed to PACKET EUV
Total bits: 7 UVS + 18 EUV UVFLUSH PACKETs = 0.124 MB UVS + 0.319 MB EUV = 0.443 MB
WAVELENGTHS (A): Emission lines: (S++ 685, S+ 765, O+ 834)
Waiver G-21 for EUVON at 17.0 Rj.

Design Detail

```
PSID     RM:mf    CDS PA
384BA    0        000 COMMNT UVS RIM 0
384BB    1        900 [LOAD PHASE 2 EUVON LIBRARY SEQUENCE]
384BC    7        179 [LOAD PHASE 2 EUVTOR LIBRARY SEQUENCE]
351BB    9         21  EUVCMD [TARGET BODY TORUS]
         9             24EUV,C,3,D9,C,2,18 [STARTING STEP 217, 2 SCANS/SECTOR, 24 SECTORS]
349BA    14:69     28  UVFLUSH [6UVRT, DISCRD, EUV]
349BB    73:69    224  UVFLUSH (28*8) [6UVRT, PACKET, EUV]
...BE,BG...BJ          [Repeat PACKET EUV every 60 RIMs; also 349JX packets the EUV.]
                       [1466:69,1526:69,1586:69,1646:69,1766:69,1826:69,1886:69,1946:69]
349BK     613:69  028  UVFLSH [6UVRT, PACKET, BOTH; UVS part is for the 20JUAURORA01 packet 2]
349BM     673:69  252  UVFLUSH (28*9) [6UVRT, PACKET, BOTH]
...BR,BT,BV            [Repeat PACKET BOTH every 60 RIMs, (349BM & 349BT EUV only)]
                       [2066:69,2126:69,2186:69,2246:69,2306:69,2366:69,2426:69,2486:69,
                       2546:69]
384BE    1156     180 [LOAD PHASE 2 EUVOFF LIBRARY SEQUENCE]

         [removed in EUVOFF for new power profile per engineering request:
         PA2,COMMENT,384YD,PRI,VOF+CDS 1160:00:0
         PA2,UTILITY,20YD,BOTH,VOF+CDS 1160:00:0,+CDS 01:00:0,+00:01:00.666,RSST
         MISC,NOTE,20YD99A,BOTH,VOF+CDS 1160:04:0,,EUV-MWG/K. TOBISKA 3-7742
         CMD,12HAP,20YD3A,PRI,VOF+CDS 1160:04:0,1;
```

Use 217 KES/AIPS

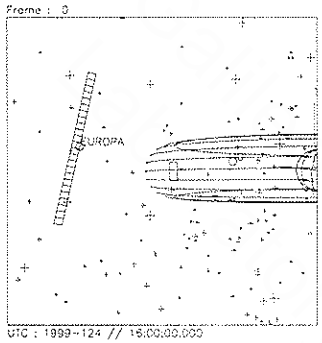

UTC : 1999-124 // 16:00:00.000
SCLK: 1/04980742:28:5:2

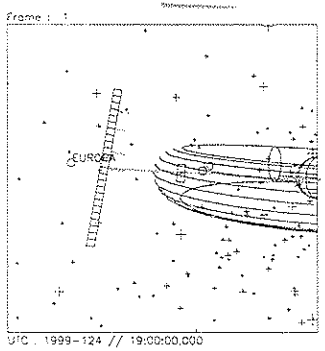

UTC : 1999-124 // 19:00:00.000
SCLK: 1/04980920:30:5:3

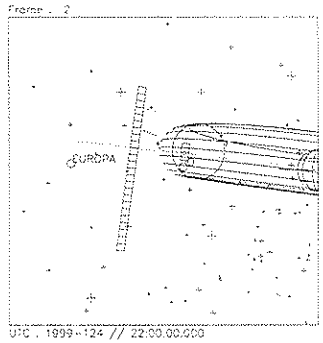

UTC : 1999-124 // 22:00:00.000
SCLK: 1/04981098:32:5:4

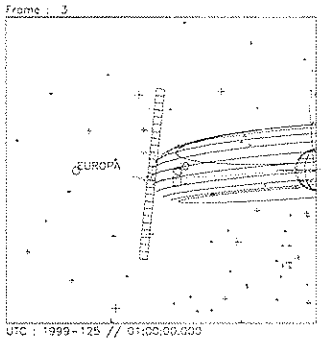

UTC : 1999-125 // 01:00:00.000
SCLK: 1/04981276:34:5:5

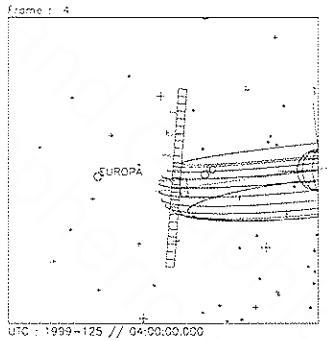

UTC : 1999-125 // 04:00:00.000
SCLK: 1/04981454:36:5:5

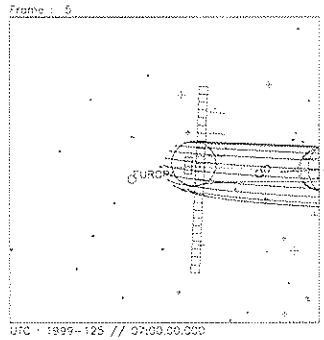

UTC : 1999-125 // 07:00:00.000
SCLK: 1/04981632:38:5:6

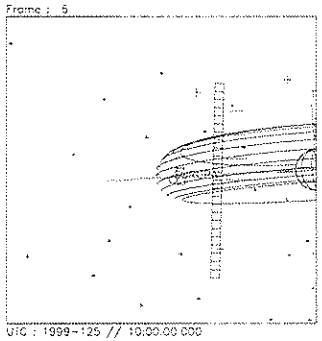

UTC : 1999-125 // 10:00:00.000
SCLK: 1/04981810:40:5:7

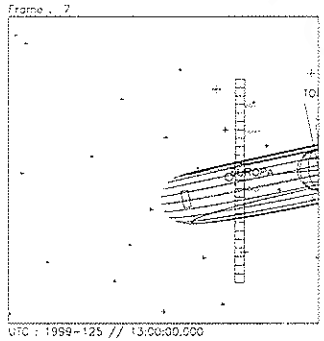

UTC : 1999-125 // 13:00:00.000
SCLK: 1/04981988:42:5:0

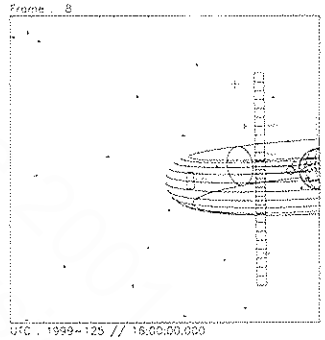

UTC : 1999-125 // 16:00:00.000
SCLK: 1/04982166:44:5:0

Start UTC_TIME : 1999-124 // 16:00:00.000
No End Time :
Start SCLK : 1/04980742:28:5:2

Target Body : JUPITER
Target Ra/Dec : 74.14/ 24.73 Deg
S/C to Body Center : 1196472. Km (16.735741 Rj)
Z-axis Pointing (Ra / Dec) : 198.35 / -3.06 Deg

20TV20NAUS01

Tue Mar 2 21:33:38 1999

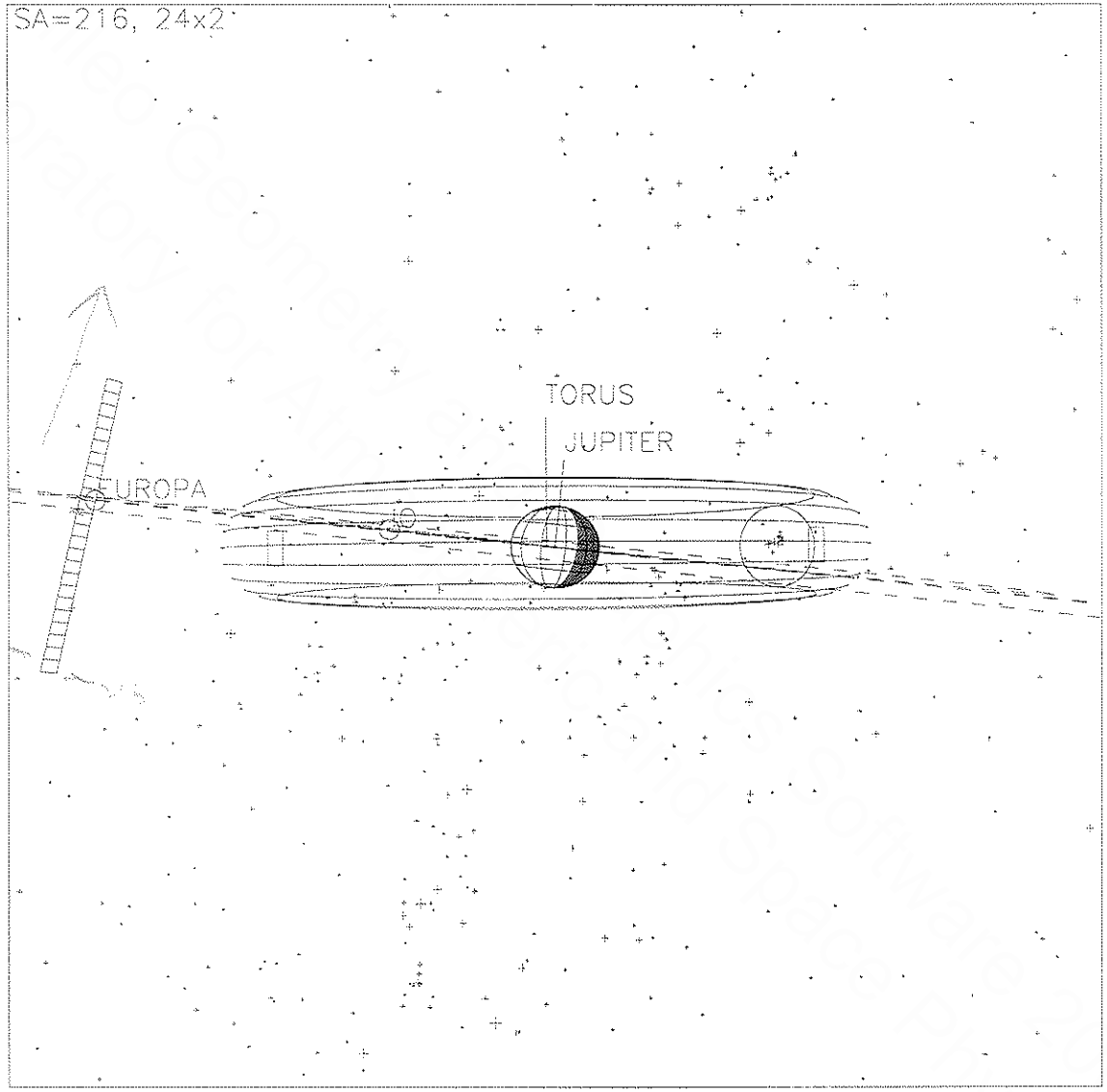

Start UTC_TIME : 1999-124 // 16:00:00.000
No End Time :
Start SCLK : 1/04980742:28:5:2

Target Body : JUPITER
Target Ra/Dec : 74.14/ 24.73 Deg
S/C to Body Center : 1196472. Km (16.735741 RJ)
Z-axis Pointing (Ra / Dec) : 198.35 / -3.06 Deg