*Design & build a Solar instrument**

not a Solar lander

Dave Crotser

dave.crotser@lasp.colorado.edu

303.735.1352

Outline

- What are we trying to measure
  - What are instrument requirements?
  - Where do we perform the measurements?
- Optics of choice - what can we use?
  - Filters, Reflectors, Refractors - oh my!
  - Useful wavelength ranges for each type
- Putting it all together
  - How would you build an X-ray detecting instrument?
  - How about EUV? Visible? All of the above at once?

Specifications…

- Monitor time-dependant Solar irradiance
- Do this at the following wavelengths:
  - 0-10nm (X-ray to soft X-ray)
  - 10-105nm (EUV)
  - 200-2000nm (UV through Visible to IR)
- Calibrate so the measurements are absolute
  - Relative measurements are relatively easy

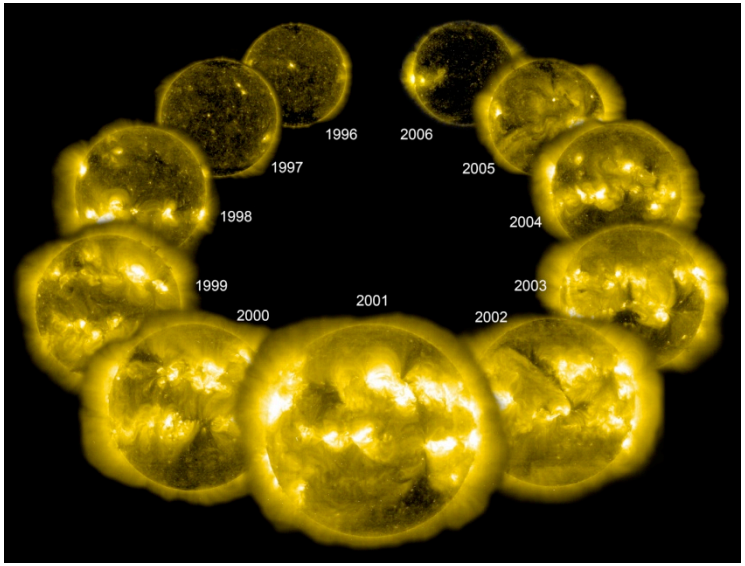

(Steele Hill, SOHO, NASA/ESA)

What are we trying to measure?

- Solar irradiance has large dynamic range as a function of wavelength
- Visible spectrum is ~1E6 times greater than EUV!

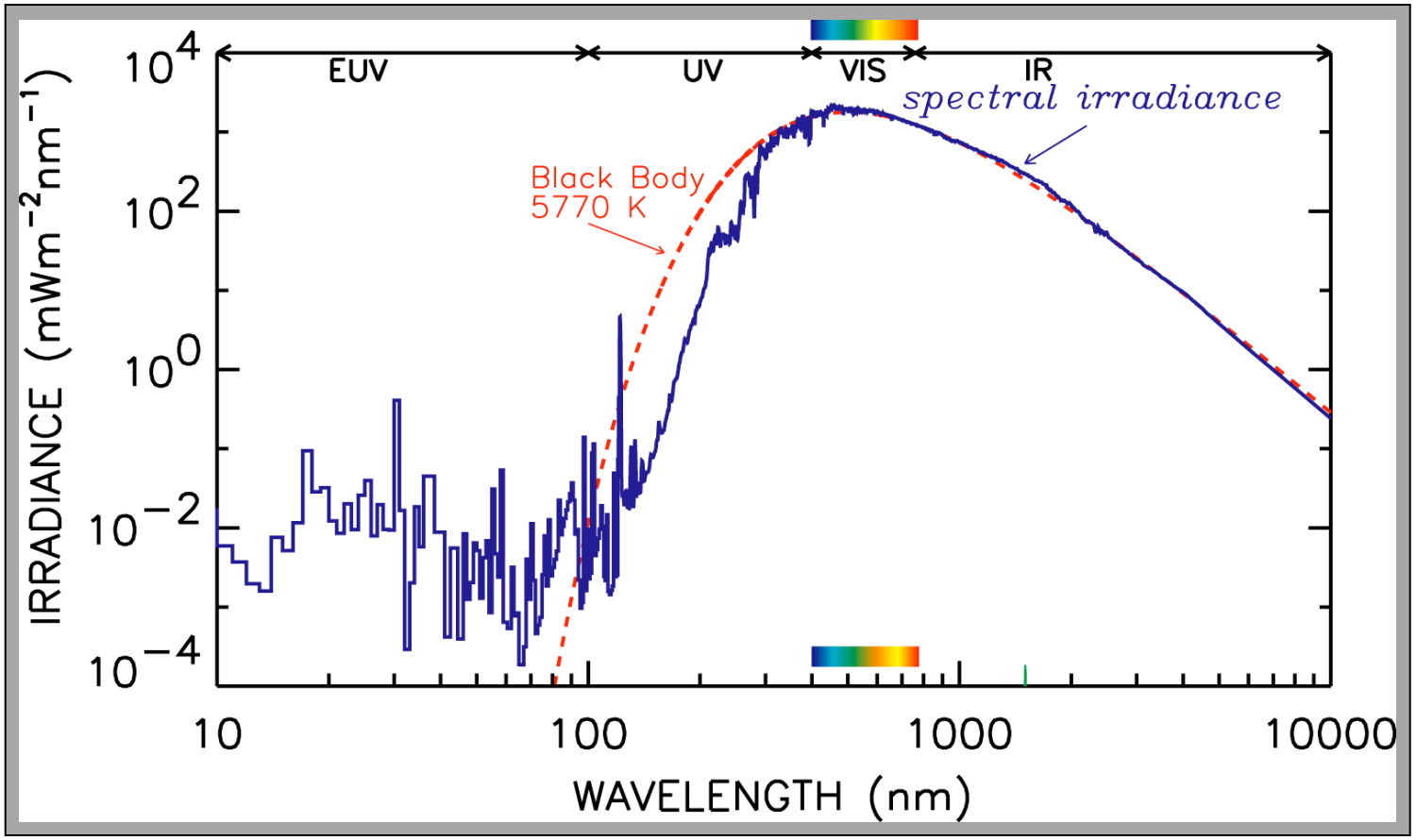

Looking At The Sun

- The Sun looks different at different wavelengths of light

Visible sun

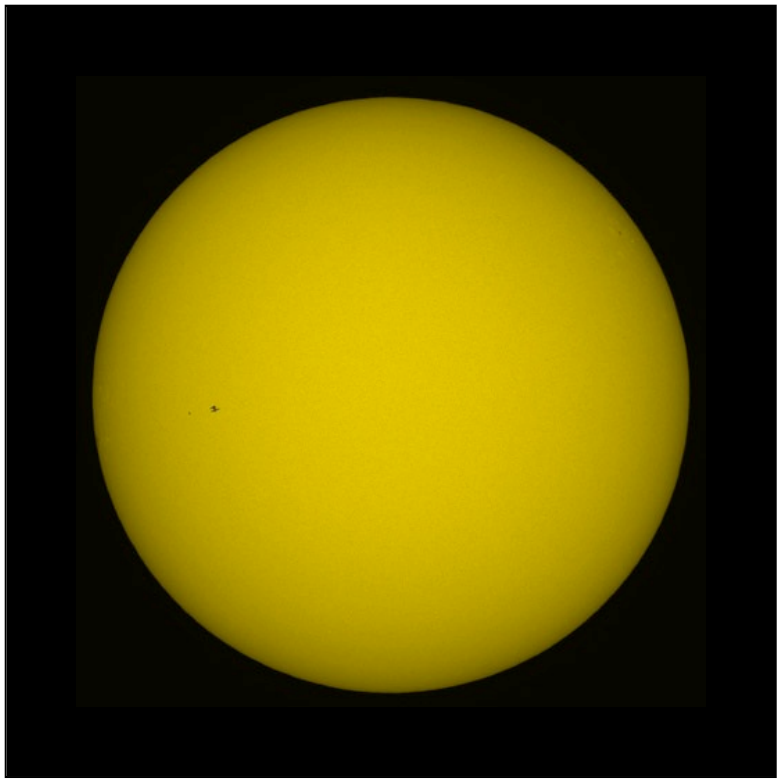

EUV sun

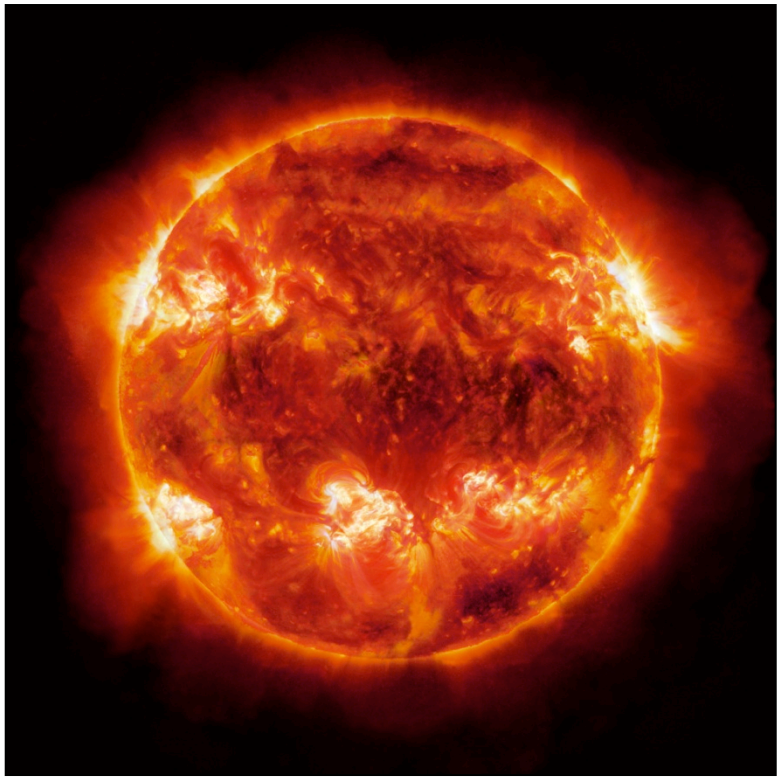

Why not measure from Earth?

- The Atmosphere absorbs lots of Solar energy
- This is good… and bad…

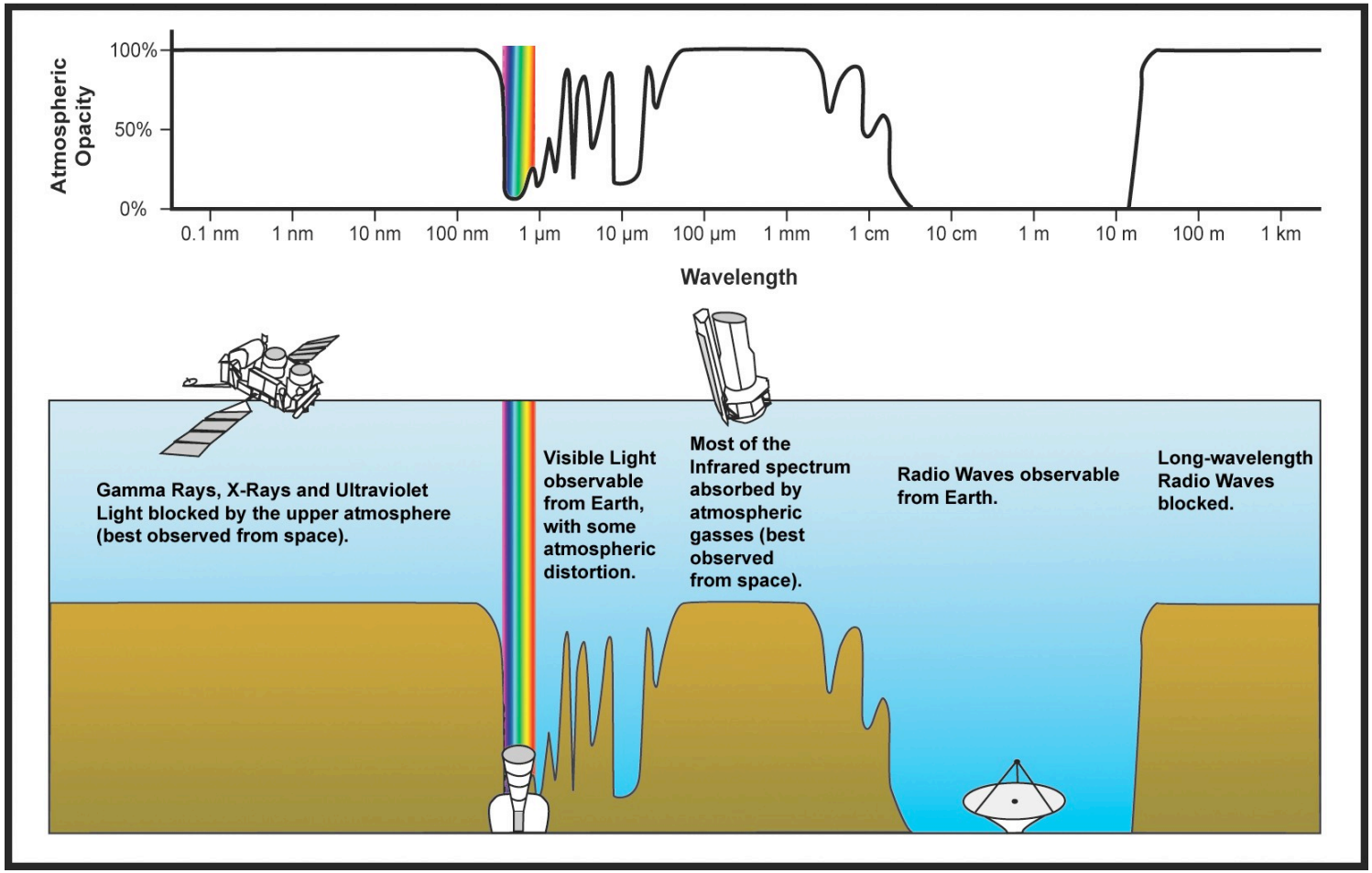

(Wikipedia)

Not all Sunlight reaches us

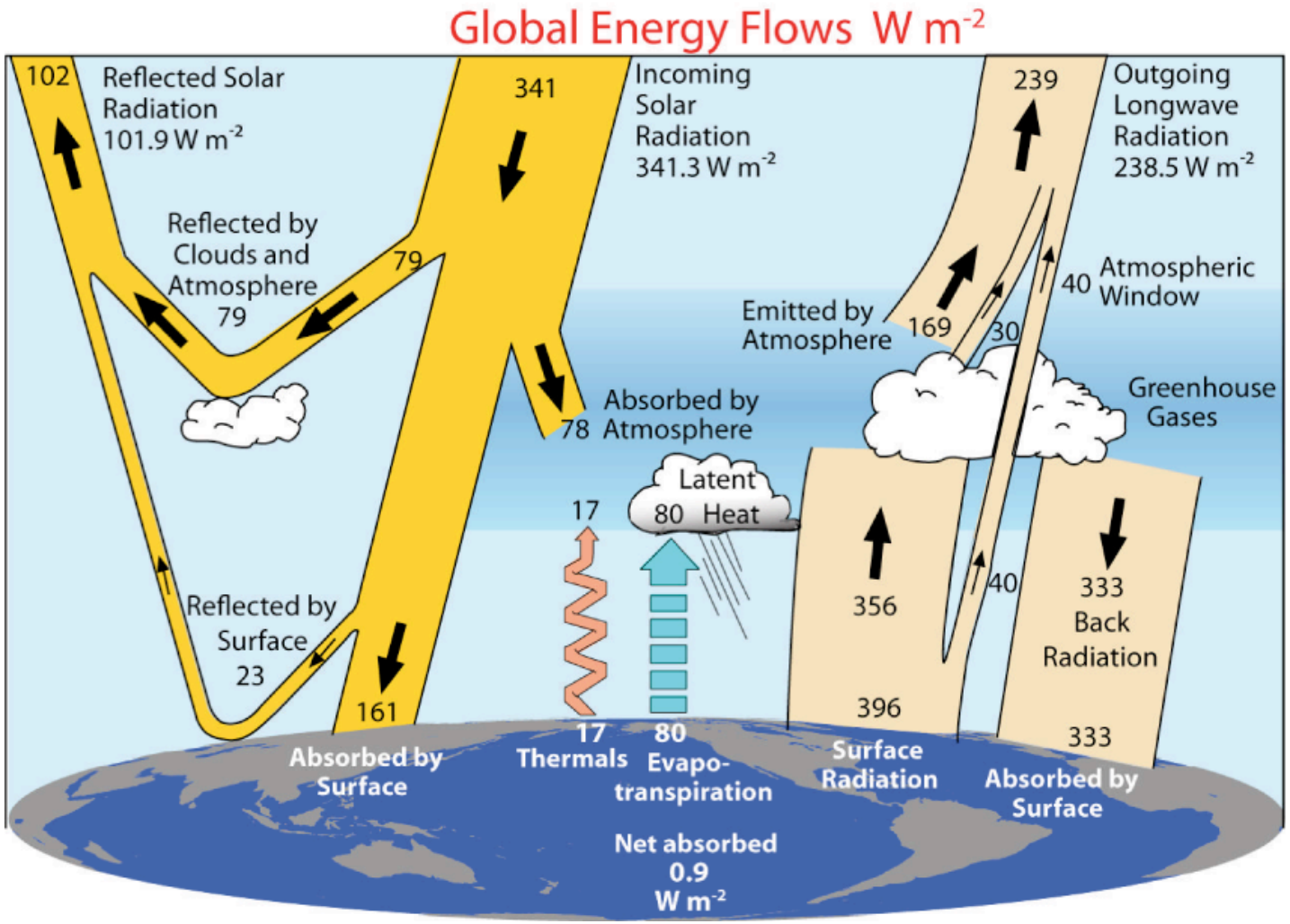

(Wikipedia)

Optics of choice

- What is useful for various wavelengths?
  - Filters
    - (nothing) - good for all wavelengths!
    - Thin foil filters - good for xray and EUV
    - Glass filters - good for UV, visible
  - Reflectors
    - Gratings - split light, EUV-IR
    - Mirrors - good for reflecting / imaging
  - Refractors
    - Lenses - good for UV, visible, near-IR
    - Prisms - split light; good for UV, visible, near-IR
    - Transmission grating: split light; EUV-IR

Thin Foil Filters

- Thin foil (~100nm!) good for X-ray, EUV
- Materials can include
  - Aluminum, Indium, Tin, Carbon, Boron, Silicon, Titanium, Zirconium…

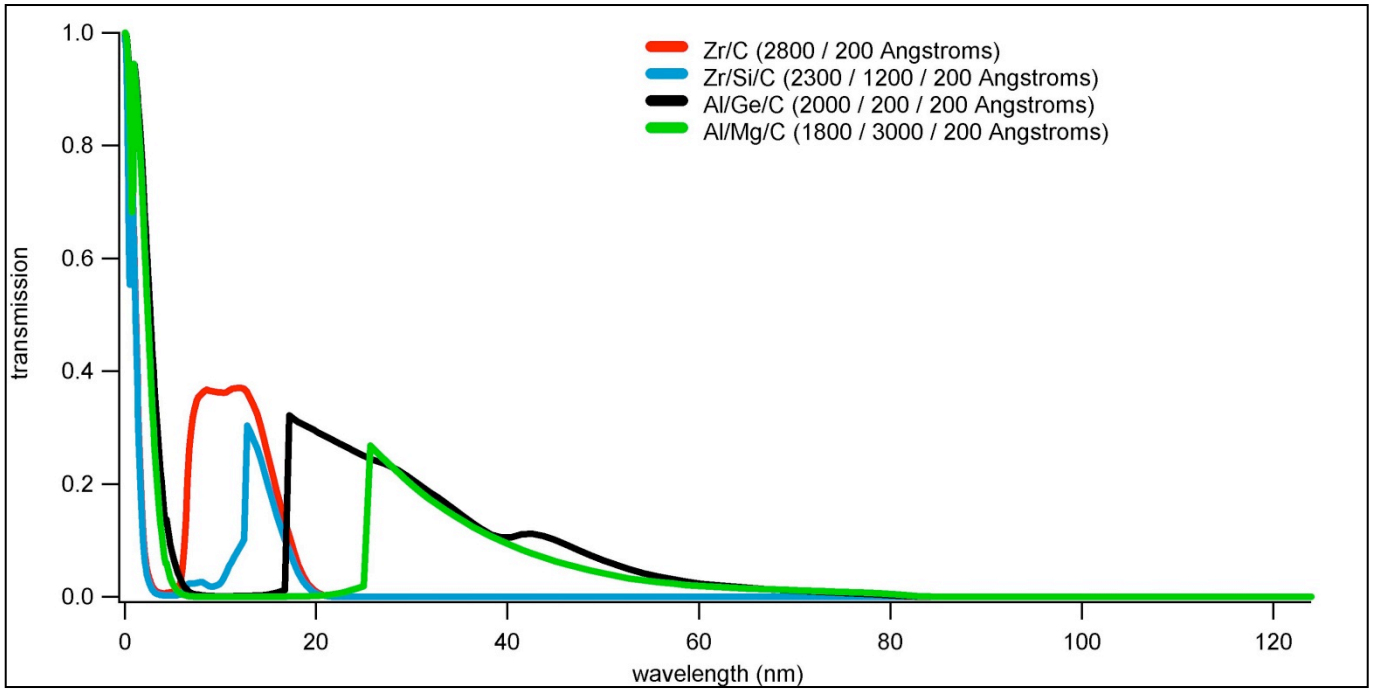

Gratings

"A diffraction grating is a collection of reflecting (or transmitting) elements separated by a distance comparable to the wavelength of light under study. An electromagnetic wave incident upon a gratings will, upon diffraction, have its electric field amplitude, or phase, or both, modified in a predictable manner."

- Reflection gratings are superimposed onto a reflective surface
- Transmission gratings are superimposed onto a transparent material

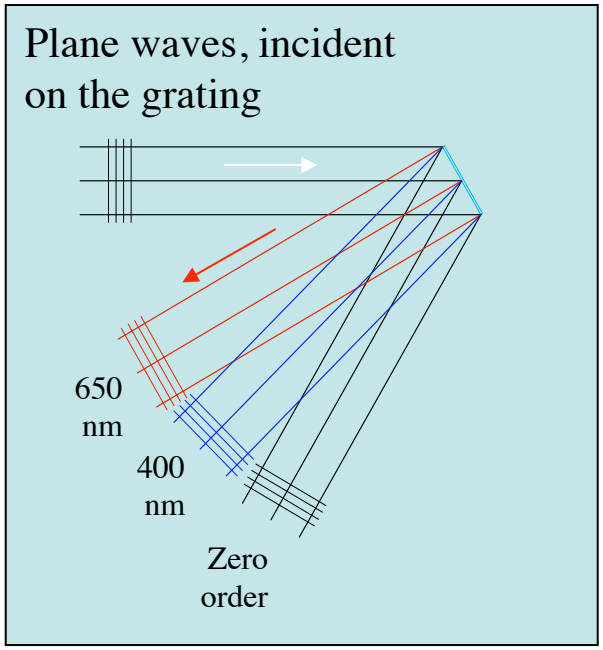

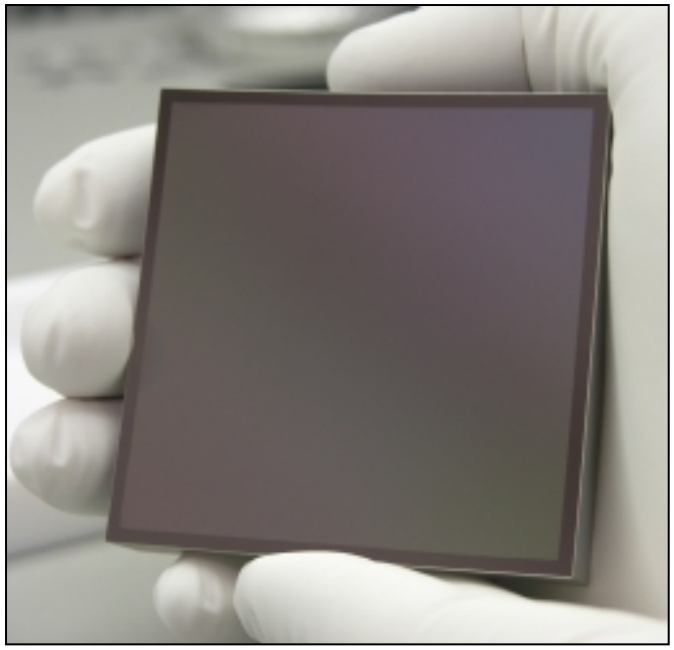

Detectors of choice

- Silicon diodes
  - Sensitive from 0-1100nm
- Germanium
  - Sensitive from 400-1700nm
- Indium-Gallium-Arsenide (InGas)
  - Sensitive from 800-2600nm

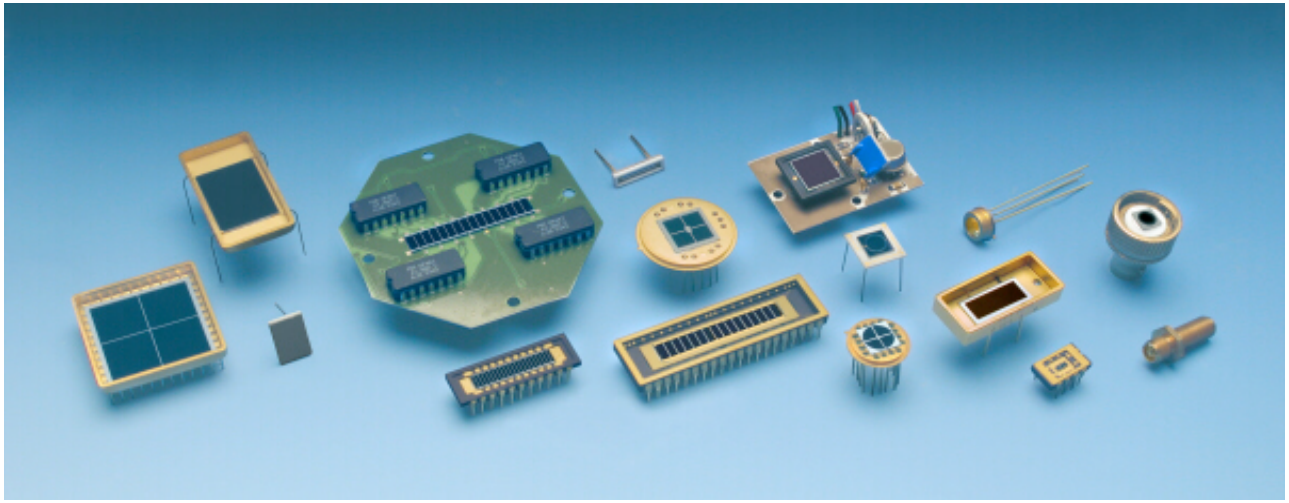

Quiz time!

- We originally set out to measure:
  - 0-10nm (X-ray to soft X-ray)
  - 10-105nm (EUV)
  - 200-2000nm (UV through Visible to IR)

How do we accomplish this?!?

Ex. 1: X-Ray Instrument

X-Ray Instrument

- XRS: X-Ray Spectrometer
  - Uses thin foil filters to select bandpass of interest
    - Filter also blocks visible light!
  - Uses silicon diode to detect photon events

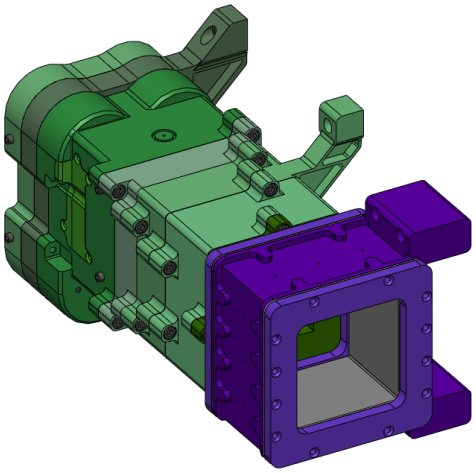

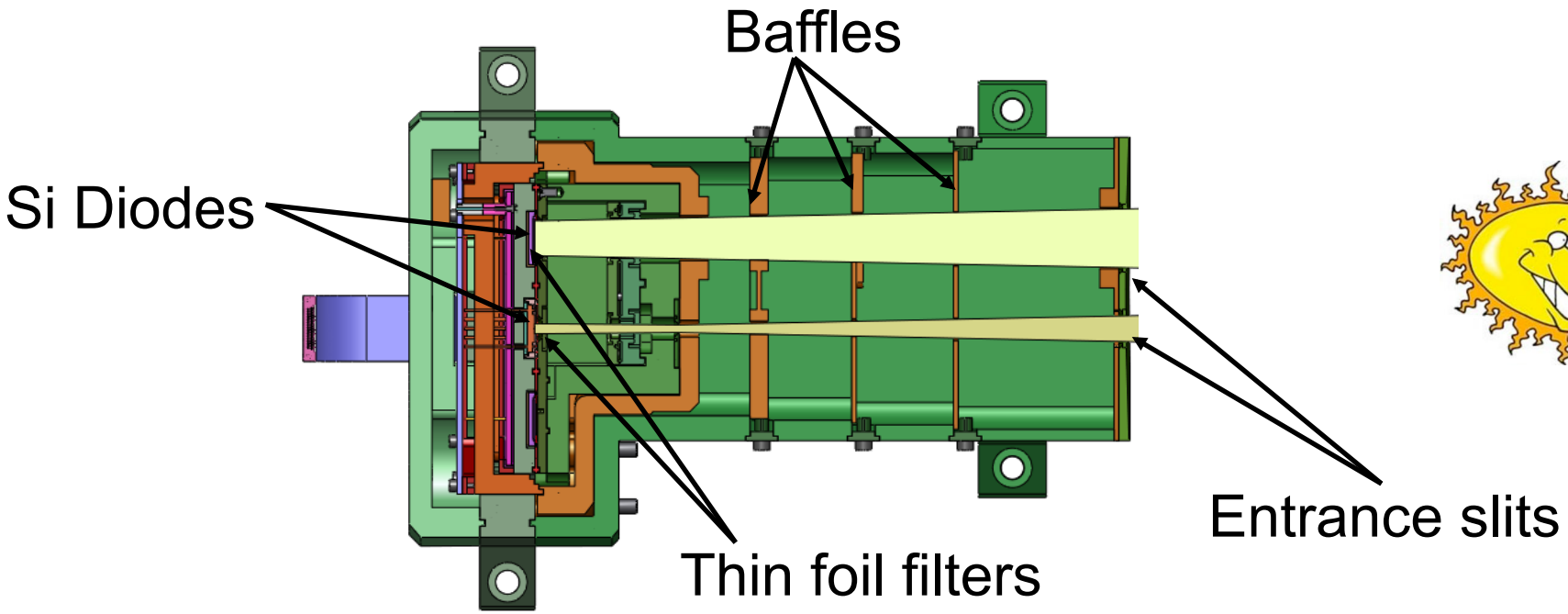

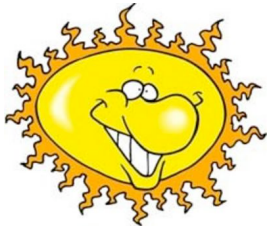

Another X-Ray Instrument

- XPS: X-ray Photometer Sensor
  - 12 separate thin-foil filter and diode pairs
  - Covers larger wavelength range with higher spectral resolution (purity)

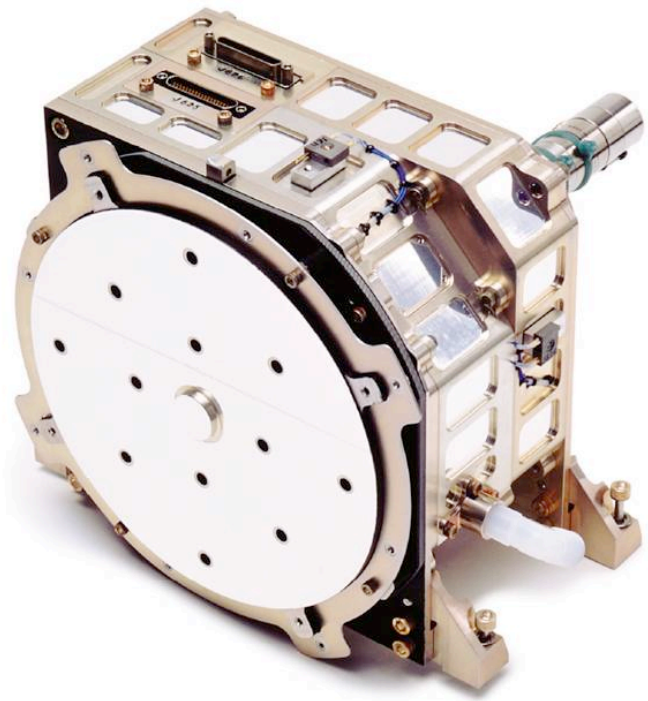

X-ray & EUV

- ESP (EUV Spectro-Photometer)
- Measures 0.1-36nm using transmission grating & Silicon diodes

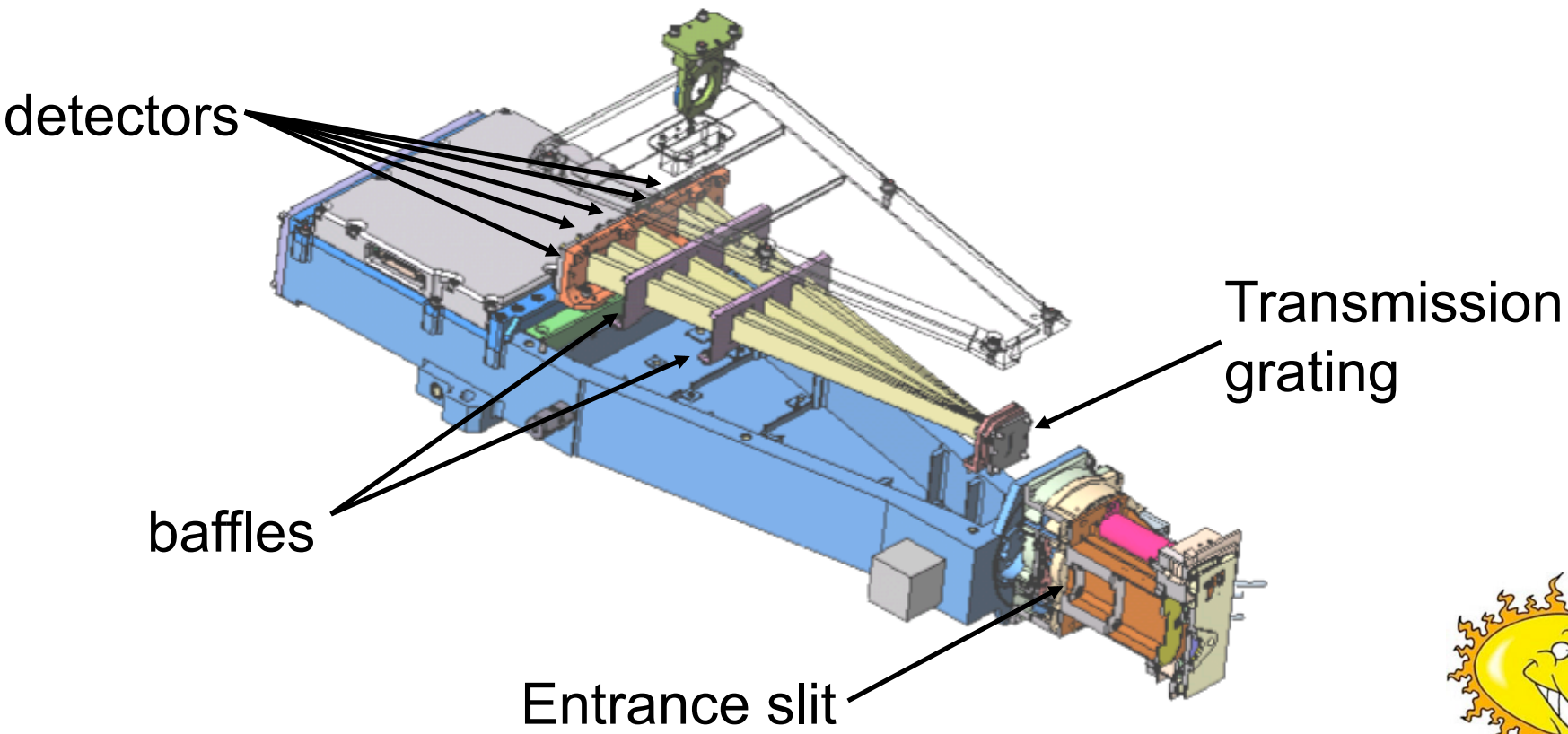

Ex. 2: EUV Instrument

EUV Spectrograph 1

- EGS (EUV Grating Spectrograph)
- Measures 25-195nm using reflection grating

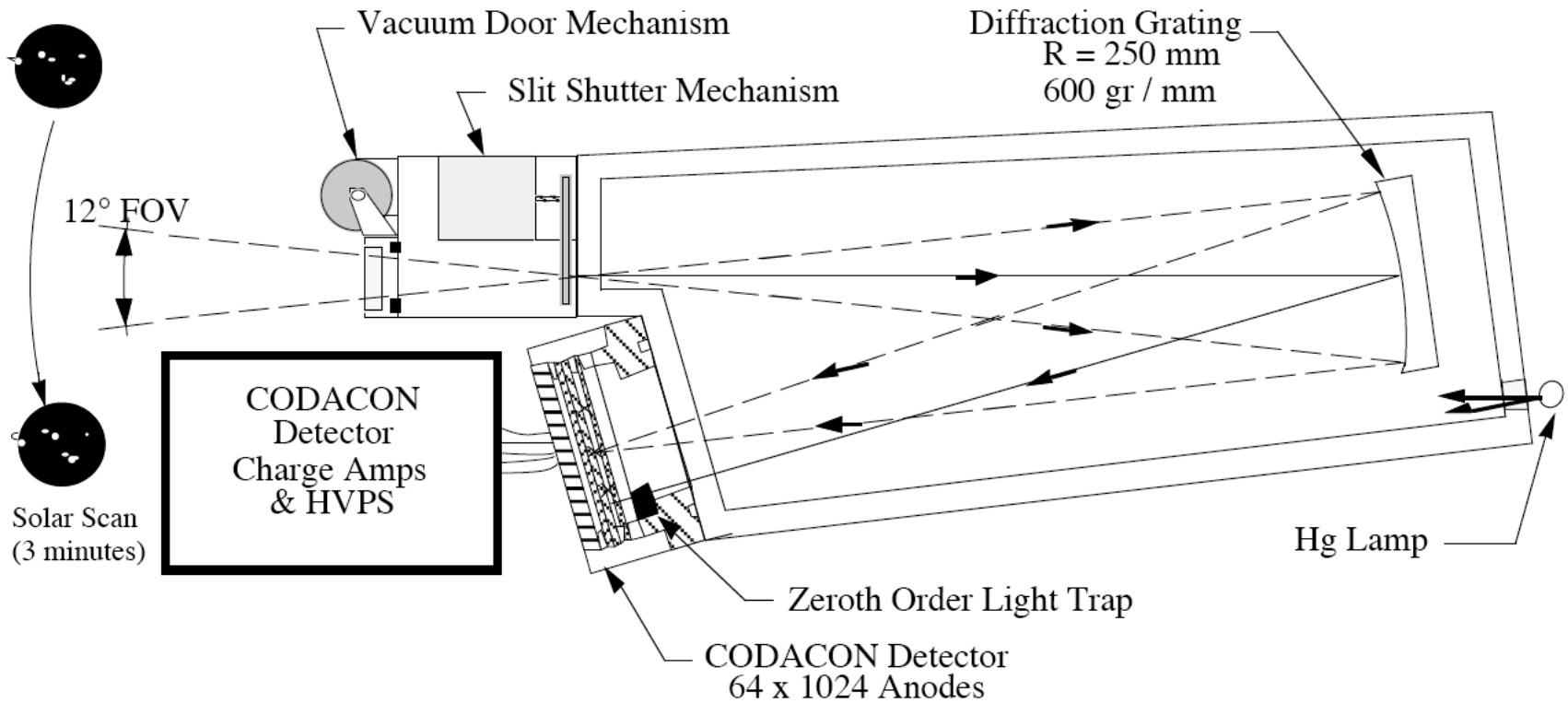

EUV Spectrograph 2

- MEGS: Multiple EUV Grating Spectrograph
- Measures 5-37nm using reflection grating
  - Thin foil filter at entrance slit blocks visible light!

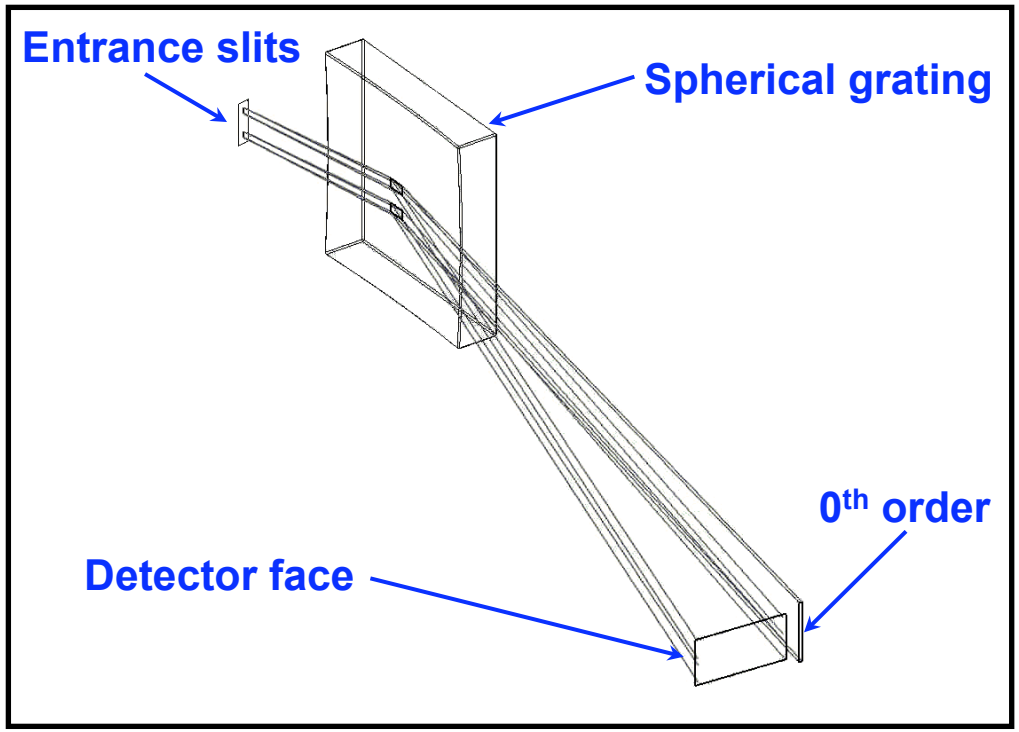

Why so different?

- The EGS implements near-normal incidence at the grating
- MEGS uses a grazing incidence grating layout

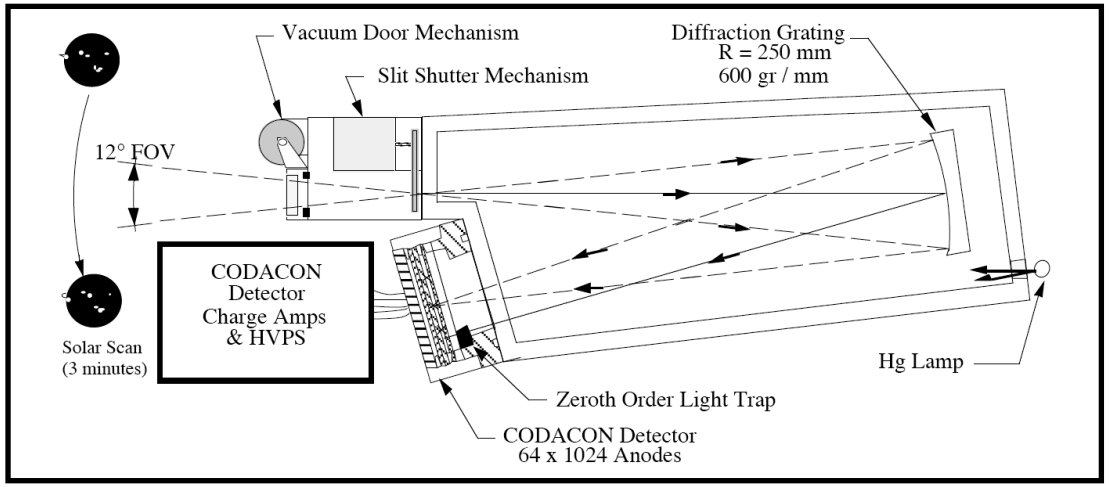

vs.

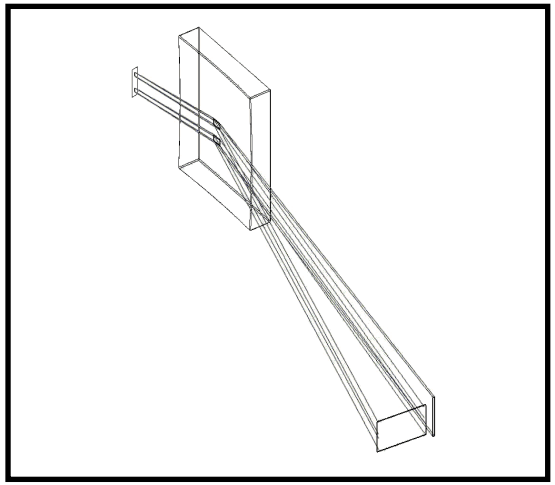

What's the deal?!?

Ex. 3: Visible Instrument

UV-Visible-IR instrument

- SIM: Spectral Irradiance Monitor
  - Measures 200-2000nm
  - Uses a prism to disperse light
  - Back of prism is a mirror!
- Prism advantages over grating
  - No higher-orders to worry about

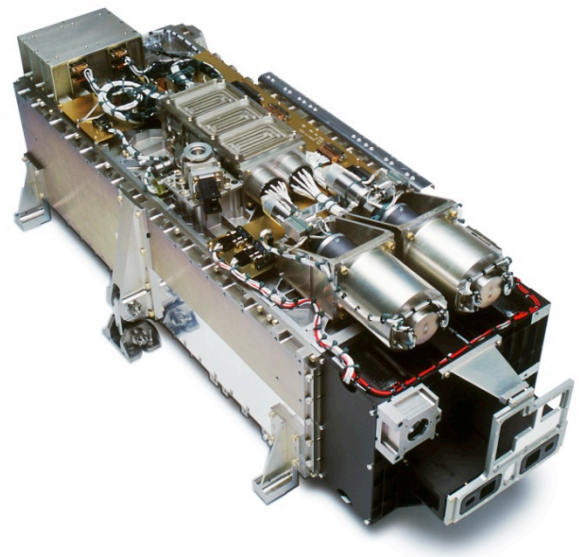

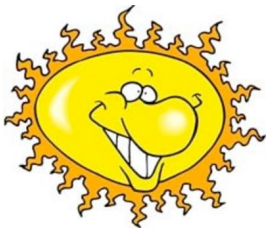

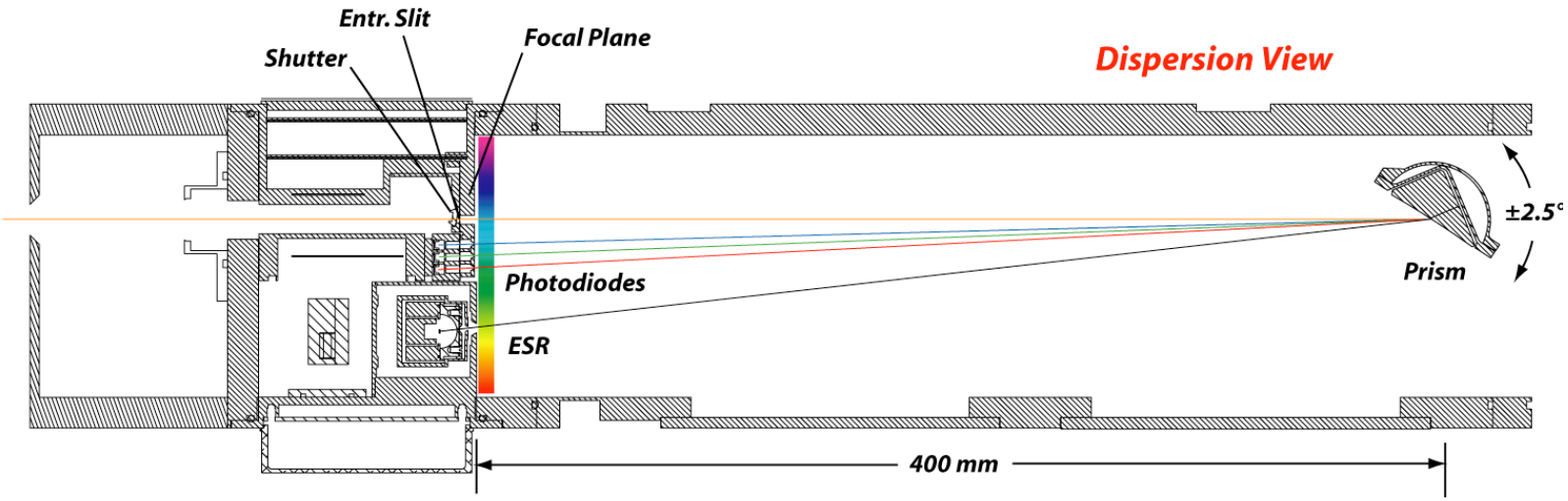

Ex. 4: X-ray through IR and beyond…

Total Irradiance Monitor

- TIM: Total Irradiance Monitor
  - Measures 0-∞nm
- No optics, except for a detector!
  - No spectral information
  - Very accurate!

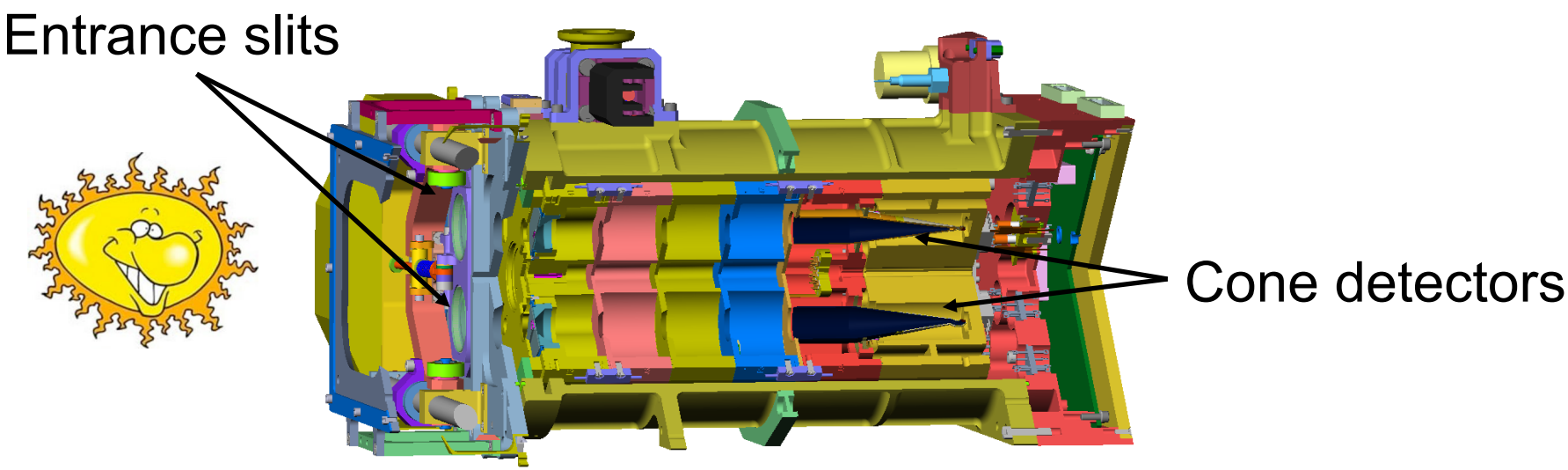

We've built it, now what?

- Once built, we need to test the instrument to understand its performance.
  - Shine in-band light into the instrument
- For visible, this is "easy" - use a flashlight!
- But X-ray and EUV wavelengths are absorbed by atmosphere…

How do we accomplish this?!?

X-ray, EUV calibrations

- First, you need a vacuum chamber to remove the atmosphere

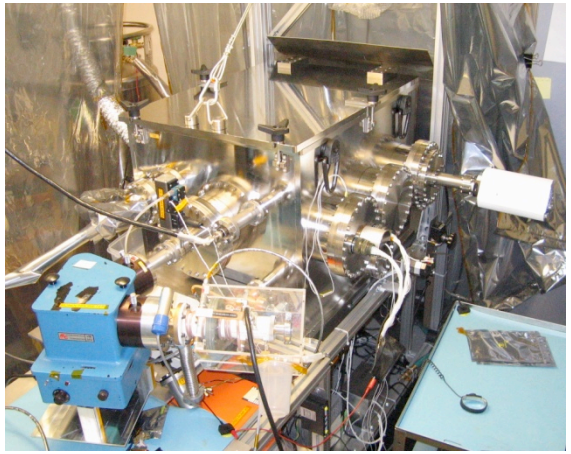

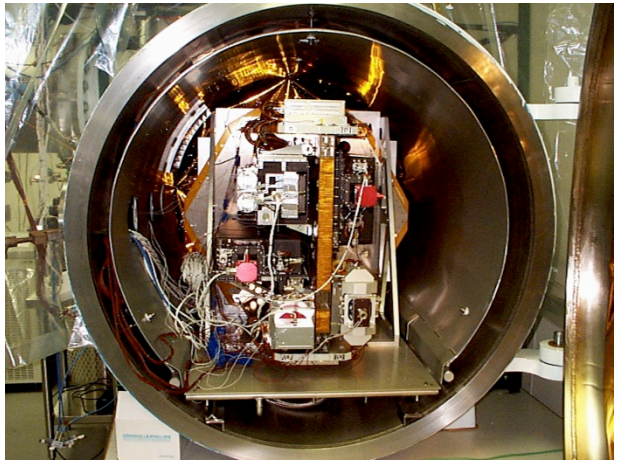

- Second, you need light sources capable of generating in-band light
  - Gas plasma discharge lamps (hollow cathode)
  - X-ray emitter (radioactive source)
  - X-ray, EUV emitter (synchrotron)