Advancements in Dust Accelerators at the Colorado Center for Lunar Dust and Atmospheric Studies

Anthony Shu
University of Colorado
Colorado Center for Lunar Dust and Atmospheric Studies

CAARI 2010

LASP
LABORATORY FOR ATMOSPHERIC AND SPACE PHYSICS
UNIVERSITY OF COLORADO AT BOULDER

Colorado
University of Colorado at Boulder

Outline

- Physics of the Moon and why a dust accelerator
- Overview of dust accelerator facility at the Colorado Center for Lunar Dust and Atmospheric Studies (CCLDAS)
- Fiber optic link into Pelletron SF6 environment
- SIMION Modeling
  - Focusing
  - Jog in beam line for particle selection
- Real Time Filtering using Field Programmable Gate Arrays (FPGAs)

NASA Lunar Science Institute Organization

7 teams within NLSI umbrella:

CU Boulder
Colorado Center for Lunar Dust and Atmospheric Studies

CU Boulder
Lunar University Node for Astrophysics Research

SWRI
Center for Lunar Origin and Evolution

Goddard
Dynamic Response of the Environment at the Moon

LPI Houston
Impact Processes in the Origin and Evolution of the Moon

J. Hopkins
Scientific and Exploration Potential of the Lunar Poles

Brown U.
The Moon as Cornerstone to the Terrestrial Planets

LASP
LABORATORY FOR ATMOSPHERIC AND SPACE PHYSICS
UNIVERSITY OF COLORADO AT BOULDER

Colorado
University of Colorado at Boulder

Lunar Environment

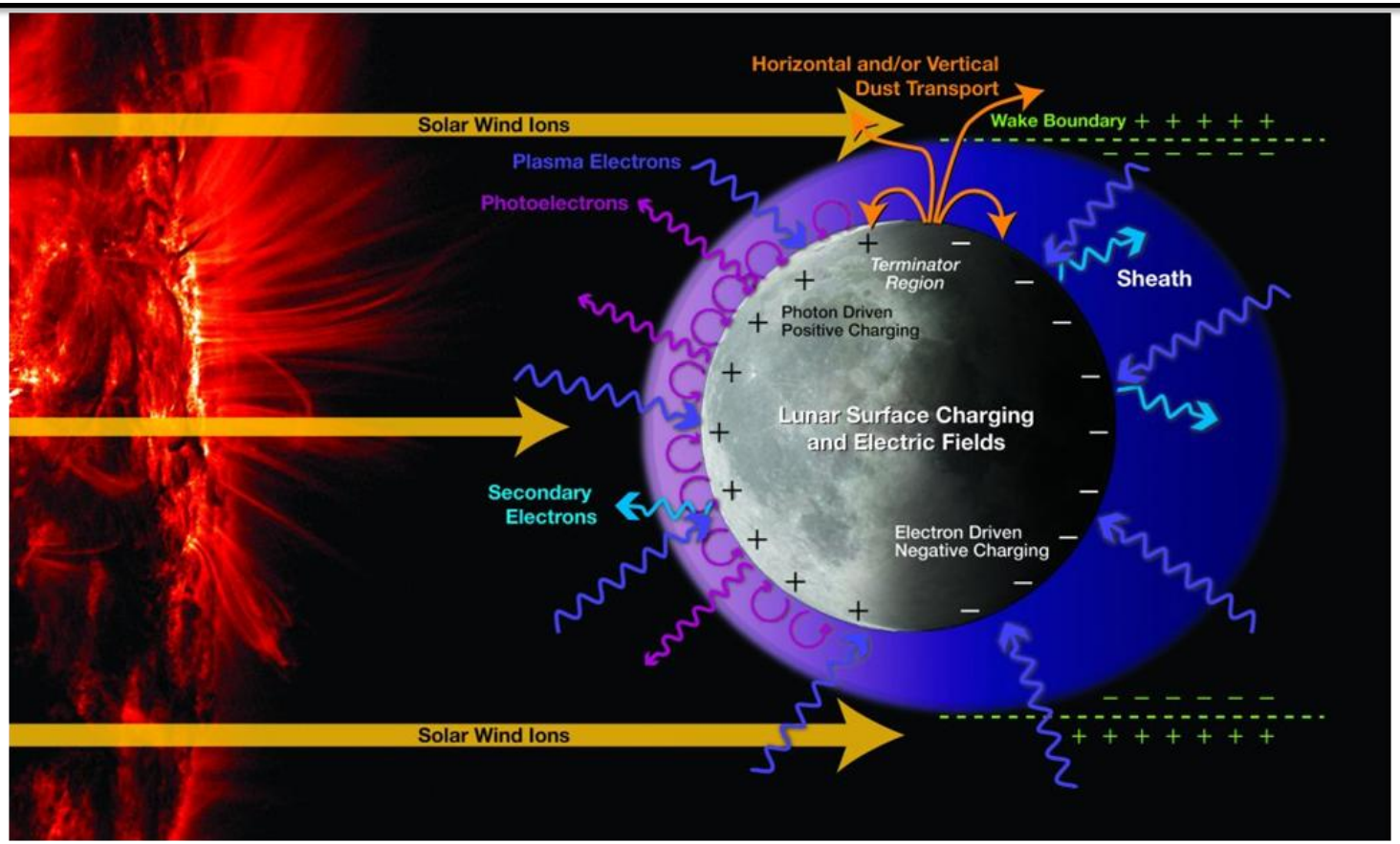

- Can be used to simulate lunar environment
- Study open questions about moon, e.g. Dust levitation, dust hazards
- Calibrate instruments measuring interstellar and lunar dust

Overview

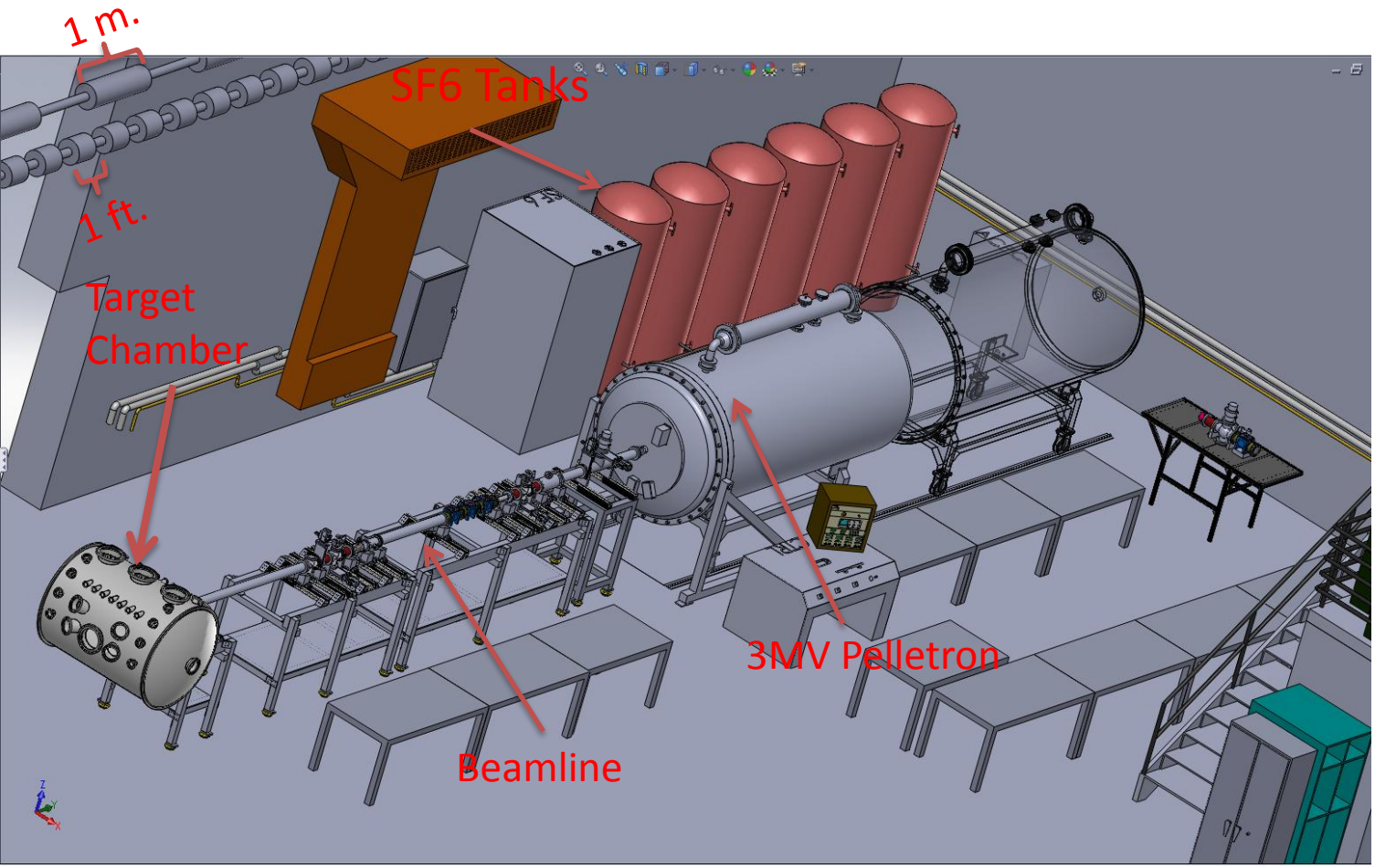

- Pelletron 3 MV Electrostatic Generator
- **Particle velocities: ≤ 100 km/s**
- Active selection of particles (size/velocity)
- Particle materials: Fe, Ag, Latex, ???
- **Particle sizes: 0.2 – 2.5 μm**

Dust Head

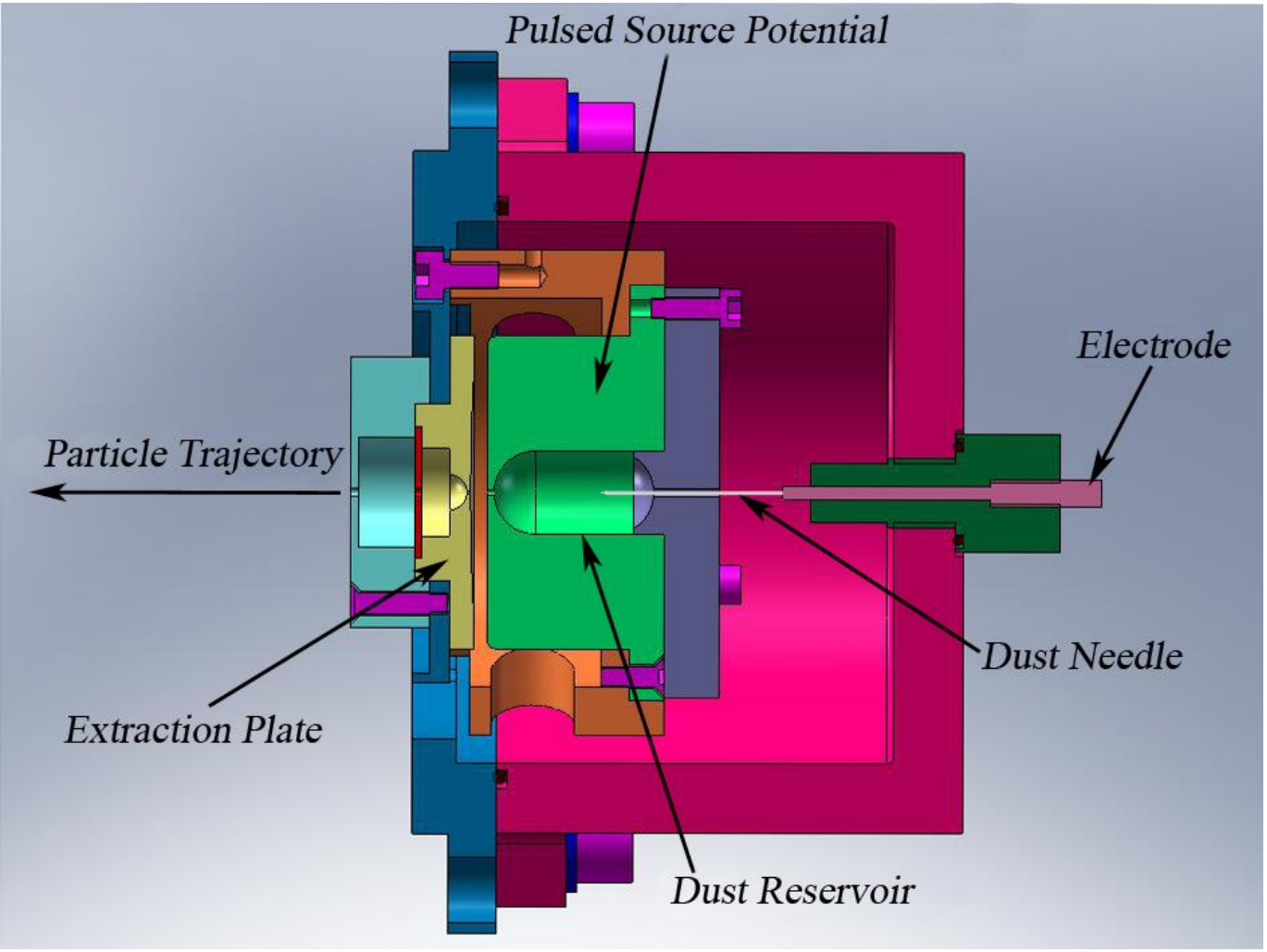

- Pre-accelerator for Pelletron
- Particle charging to surface electric fields of ~3×10^9 V/m (~ 30% of field emission limit)
- Needle kept at 20kV DC
- Reservoir pulsed from 20kV to Ground
- Extraction plate held at ground
- Fires particles at random rate

Fiber Optic Controls

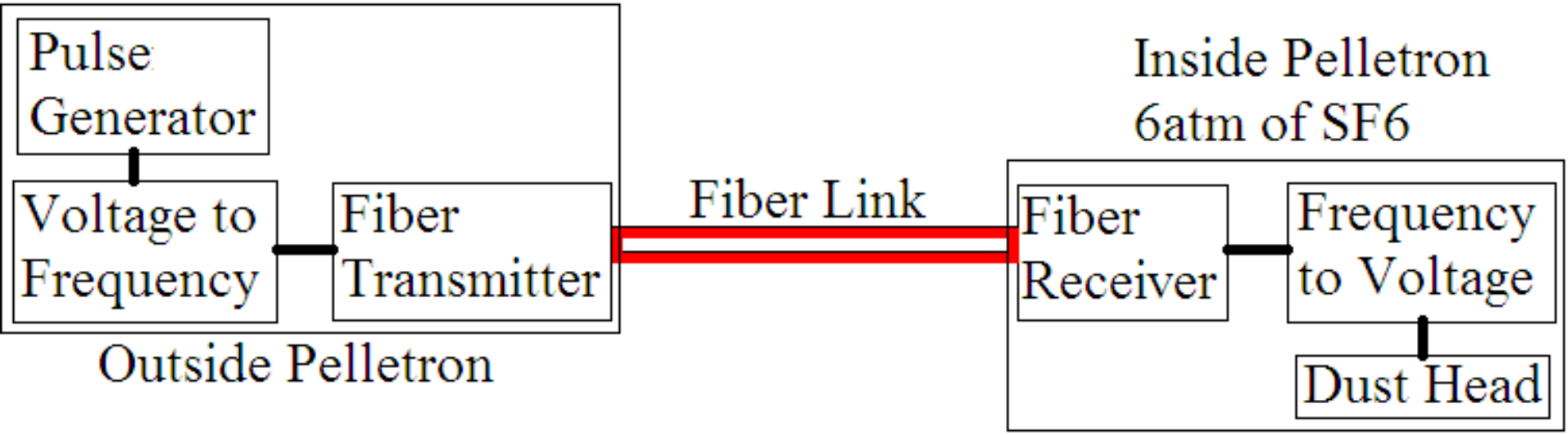

- Built and tested in air
- Can control pulsing characteristics remotely
- Operates from 0-10V
- Pulse Frequency $\leq$ 1.5kHz
- Fiber feedthroughs made by National Electrostatics Corporation
- Still needs to be tested in SF6 Environment

Fiber Response

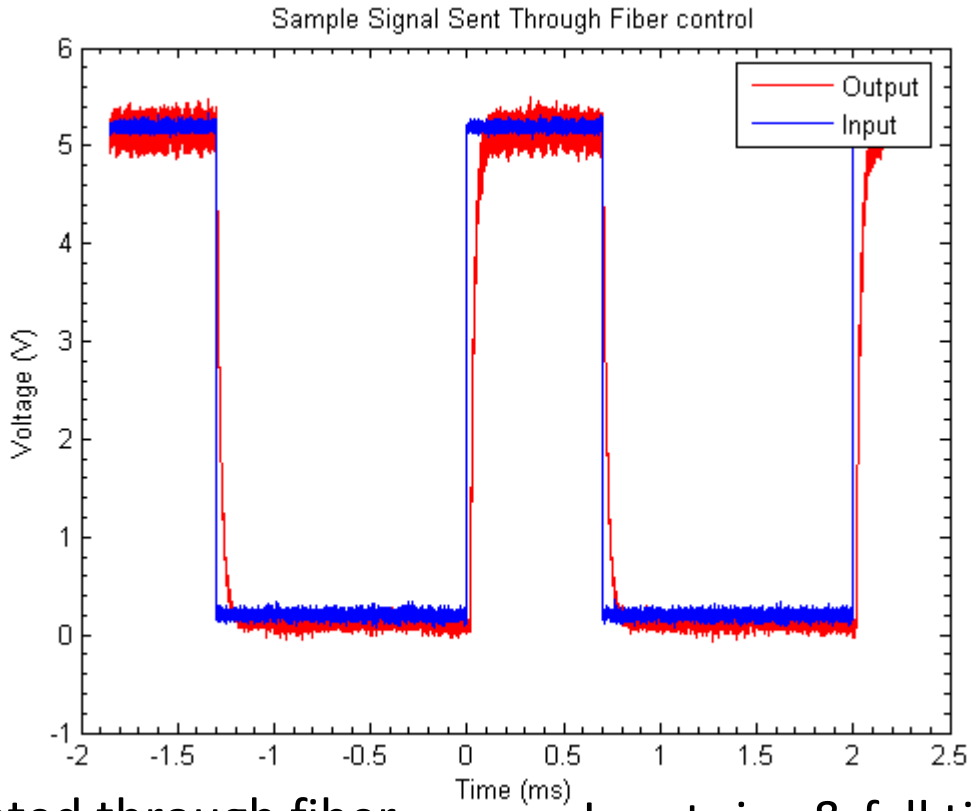

- Pulse is well recreated through fiber
- Frequency: 500Hz
- Input pulse width: 700us
- Input pulse height: 5V
- Input rise & fall time: ~35ns
- Output rise & fall time: ~50us
- ~14% of pulse distorted
- ~300kHz 600mVpp noise

SIMION Modeling

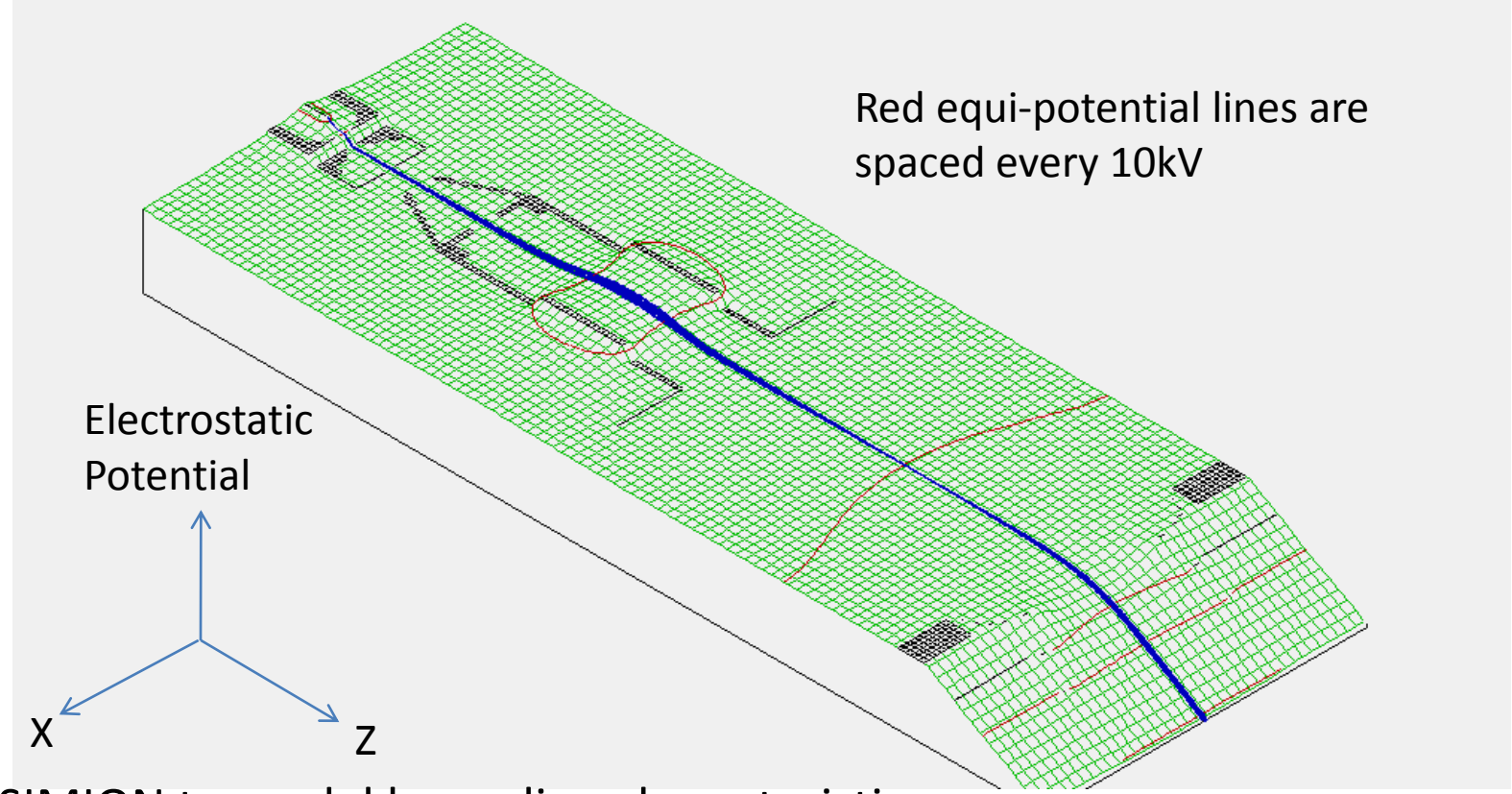

- Using SIMION to model beam line characteristics
- Modeling Dust head pre-accelerator, Einzel focusing lens, Pelletron Accelerator, Sikler Bending lens
- Groundwork for switching from passive to active particle selection

Pre-acceleration with No Focusing

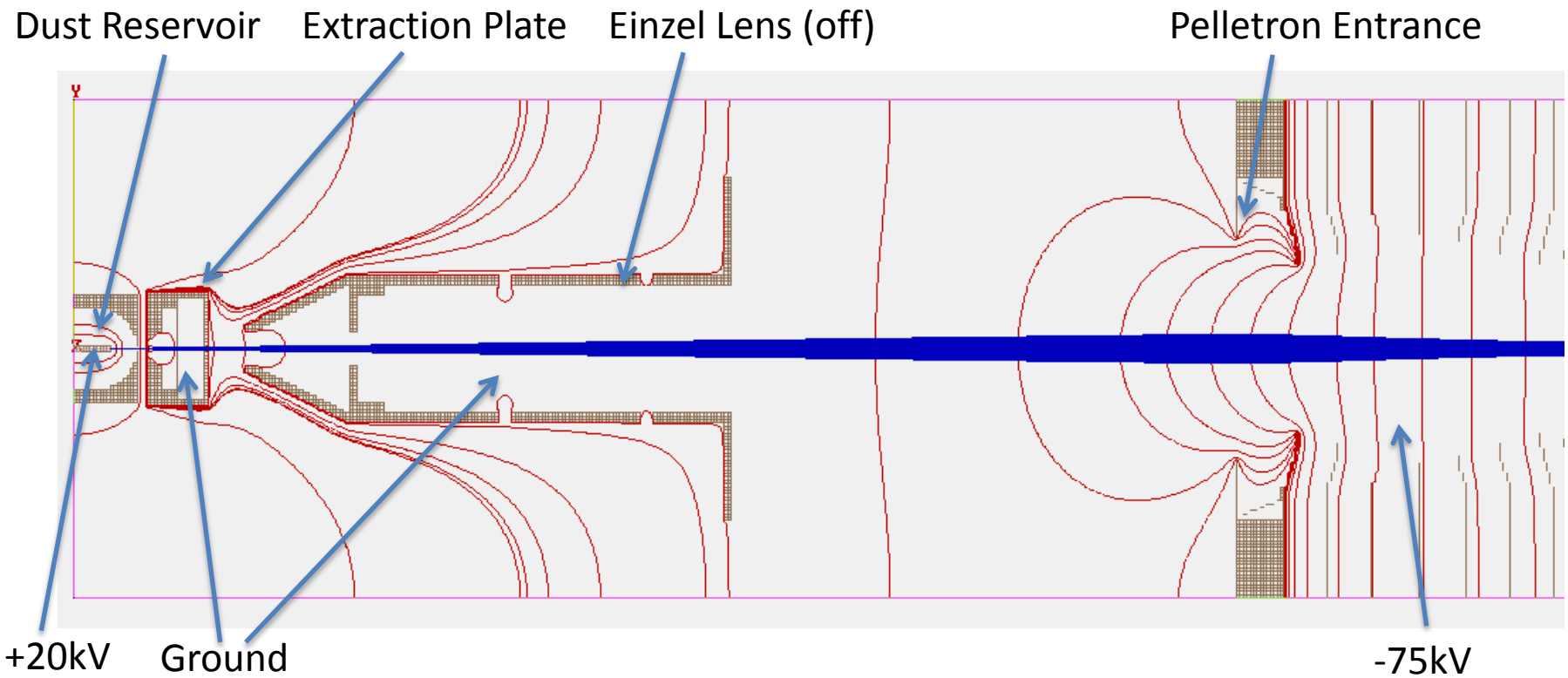

- Einzel focusing lens is turned off
- Red lines are equi-potential lines
- Blue lines are trajectories of dust particles

- Dust is modeled as a point source fired in a 30° cone from tip of needle in dust reservoir
- Charge to Mass Ratio is ~17 C/Kg

Pre-acceleration with Focusing

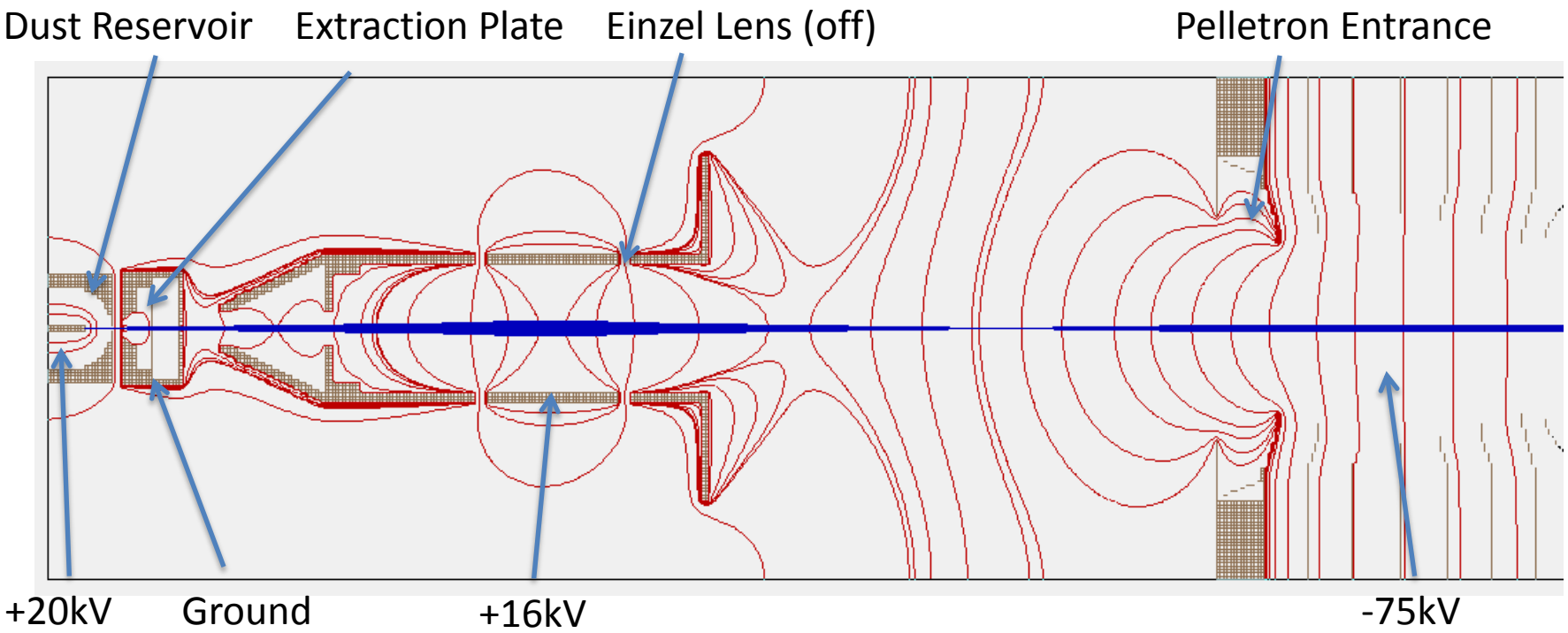

- Einzel focusing lens is turned on
- Red lines are equipotential lines
- Blue lines are trajectories of dust particles
- Charge to Mass Ratio is ~17 C/Kg

- Dust is modeled as a point source fired in a 30° cone from tip of needle in dust reservoir
- Particles are roughly parallel after entering Pelletron

Final Beam Spot

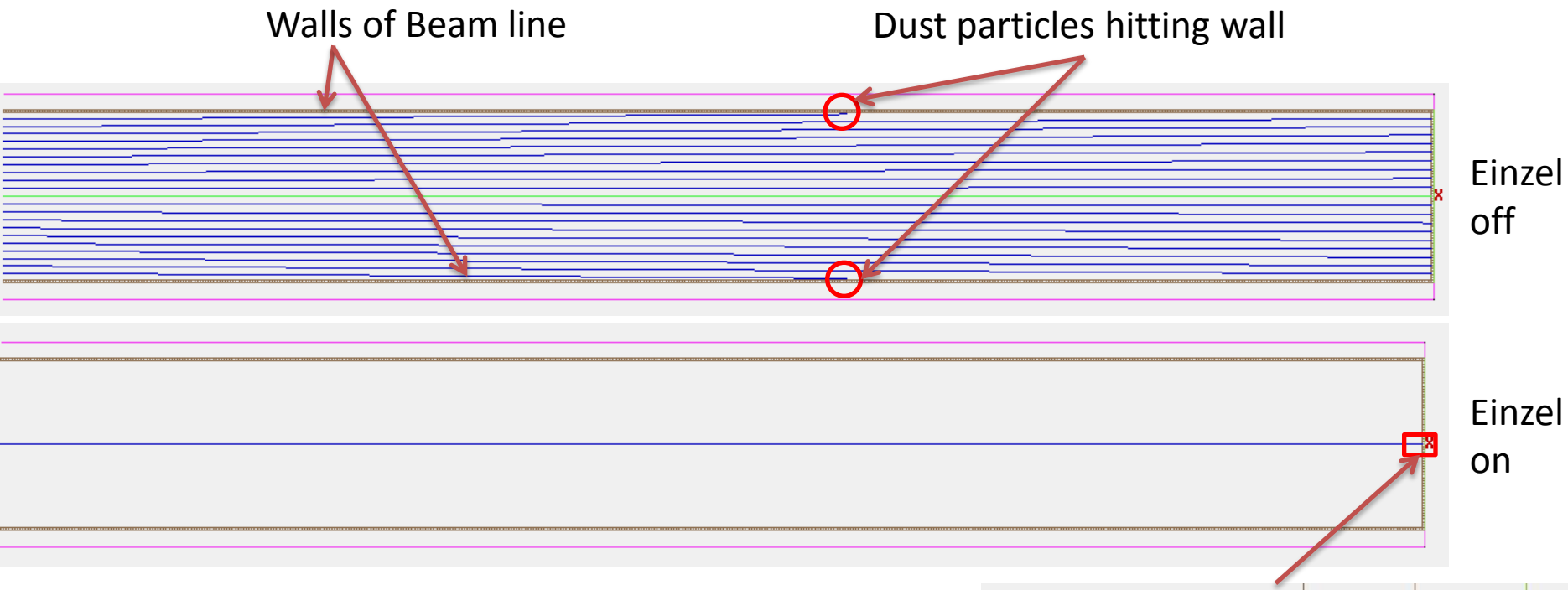

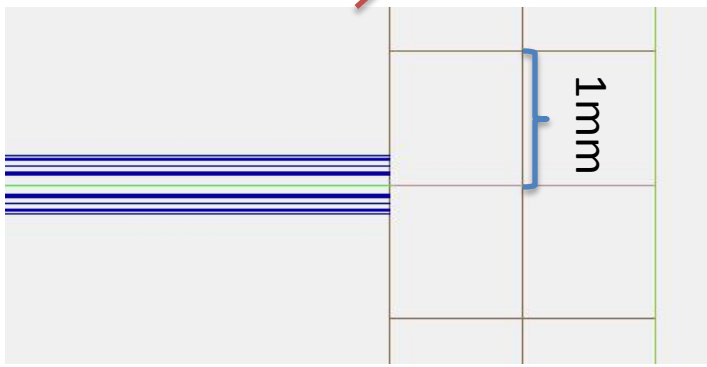

- Without focusing lens, beam is not collimated
- Final spot is larger than size of beam line ~6”
- With lens on, beam is collimated
- Spot size: ~0.5mm diameter

Beamline

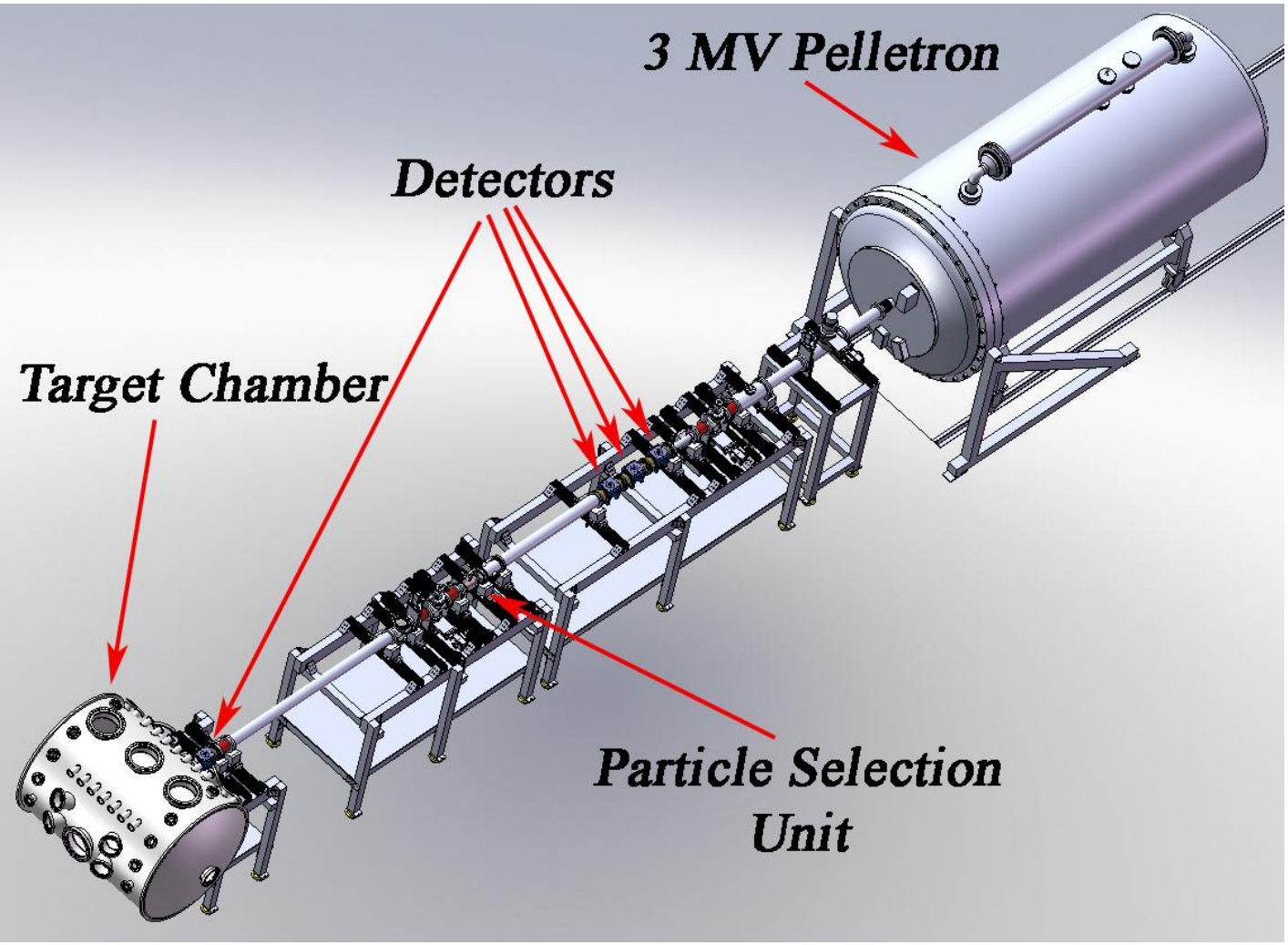

- Current beamline design is straight
- Unwanted Particles are bent out of the beam path using turning plates
- Neutral particles cannot be blocked
- Solution: add a jog in the beamline
- Wanted particles must be bent into the beam path

Contour Map of Sikler Lens

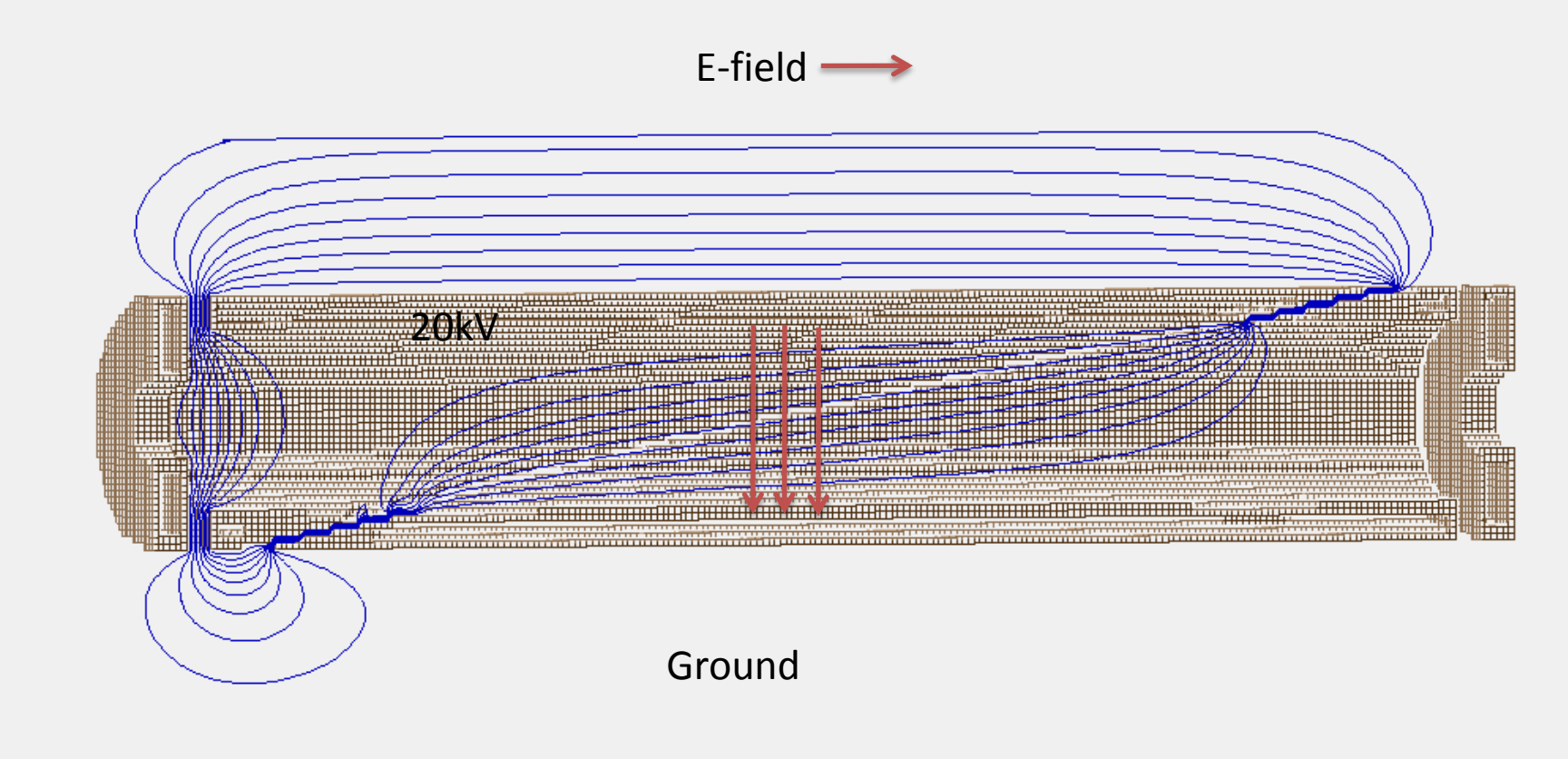

- Equi-potential lines show every 2kV
- Furthest out contour is at ground
- E-field is pointed downwards

Beam Bending /w Sikler Lens

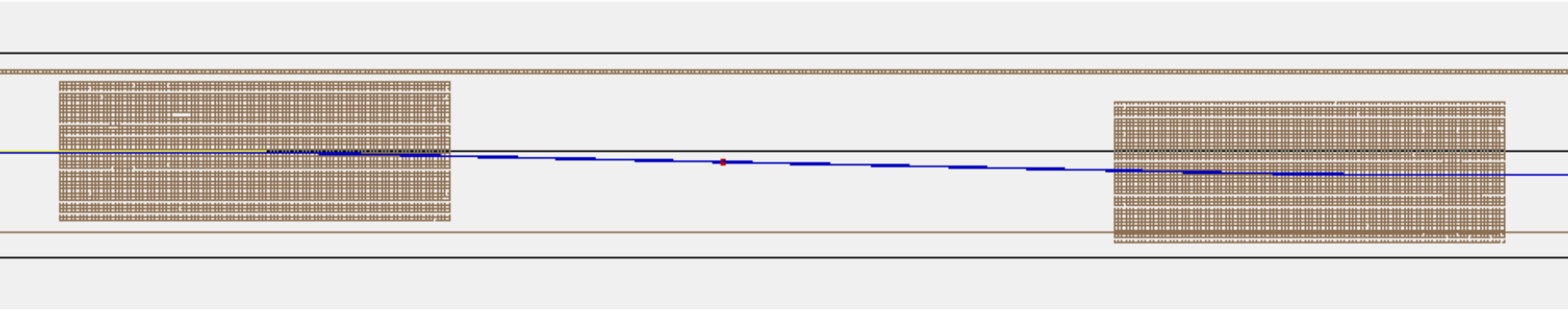

- Beam is bent off axis using a Sikler lens and bent back on axis using a second Sikler lens
- Creates active selection as particles must be moved in order for particles to make it to target chamber
- Current design bends beam ~17mm from original beamline
- Spot size remains ~0.5mm in diameter

Detector

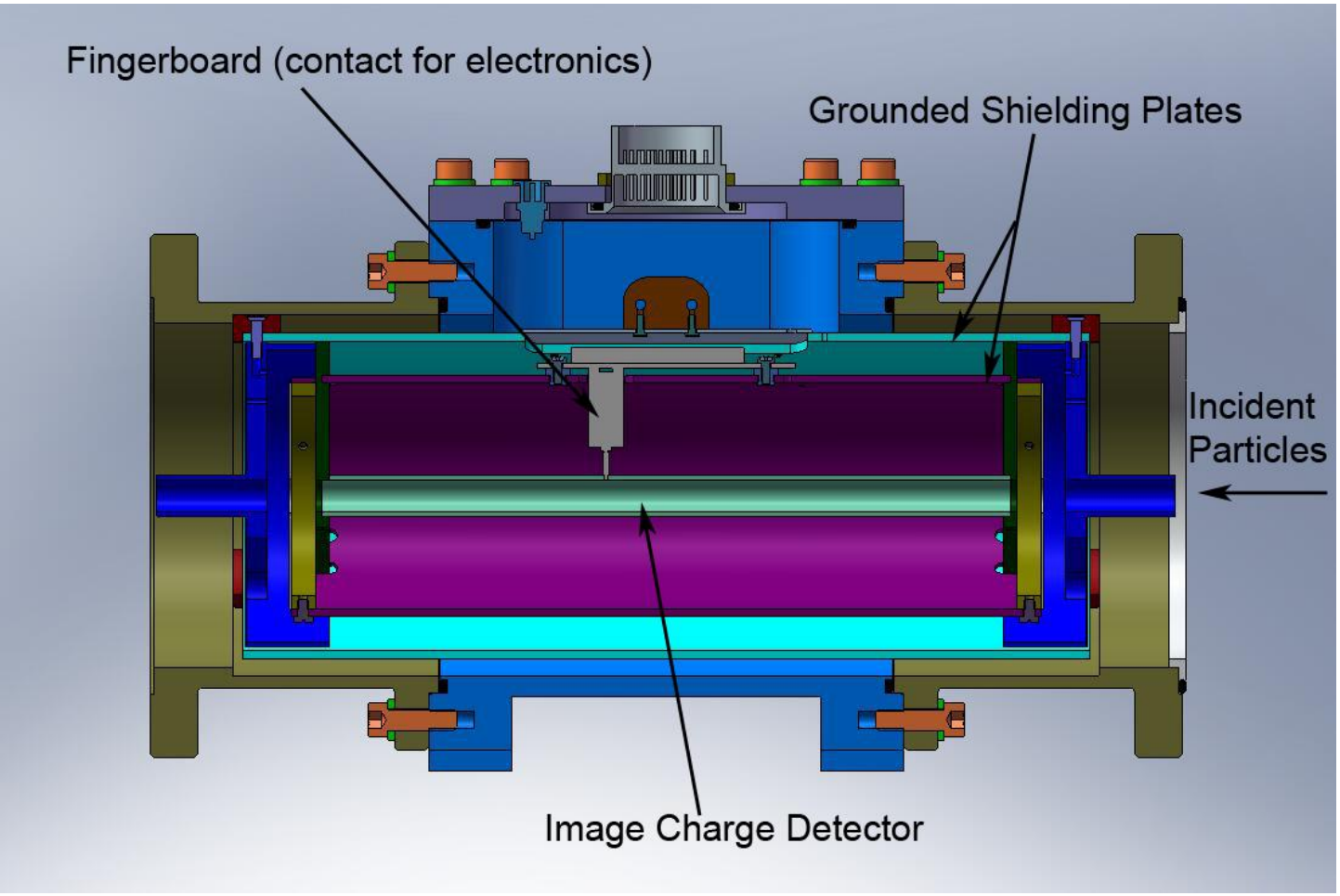

- Passive Detection
- Detect image charge induced on cylinder
- 20 cm detector → 2-200 μs square pulse (SNR≥2.5)
- Smallest and fastest particles can be lost in noise

Detector Signals

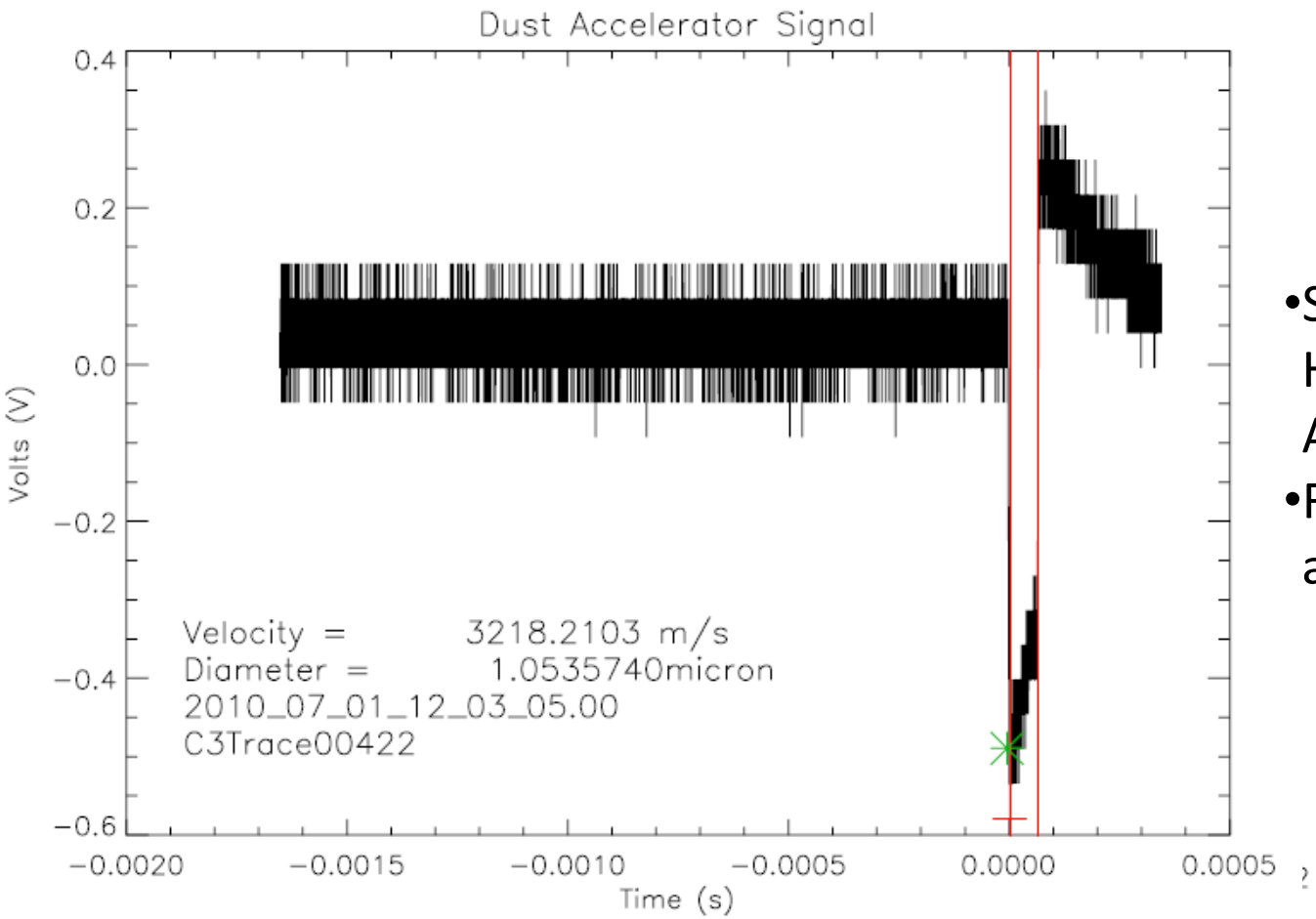

- Sample signal taken in Heidelberg Dust Accelerator Facility
- Faster particles appear as square pulses

Correlation with Square Filters

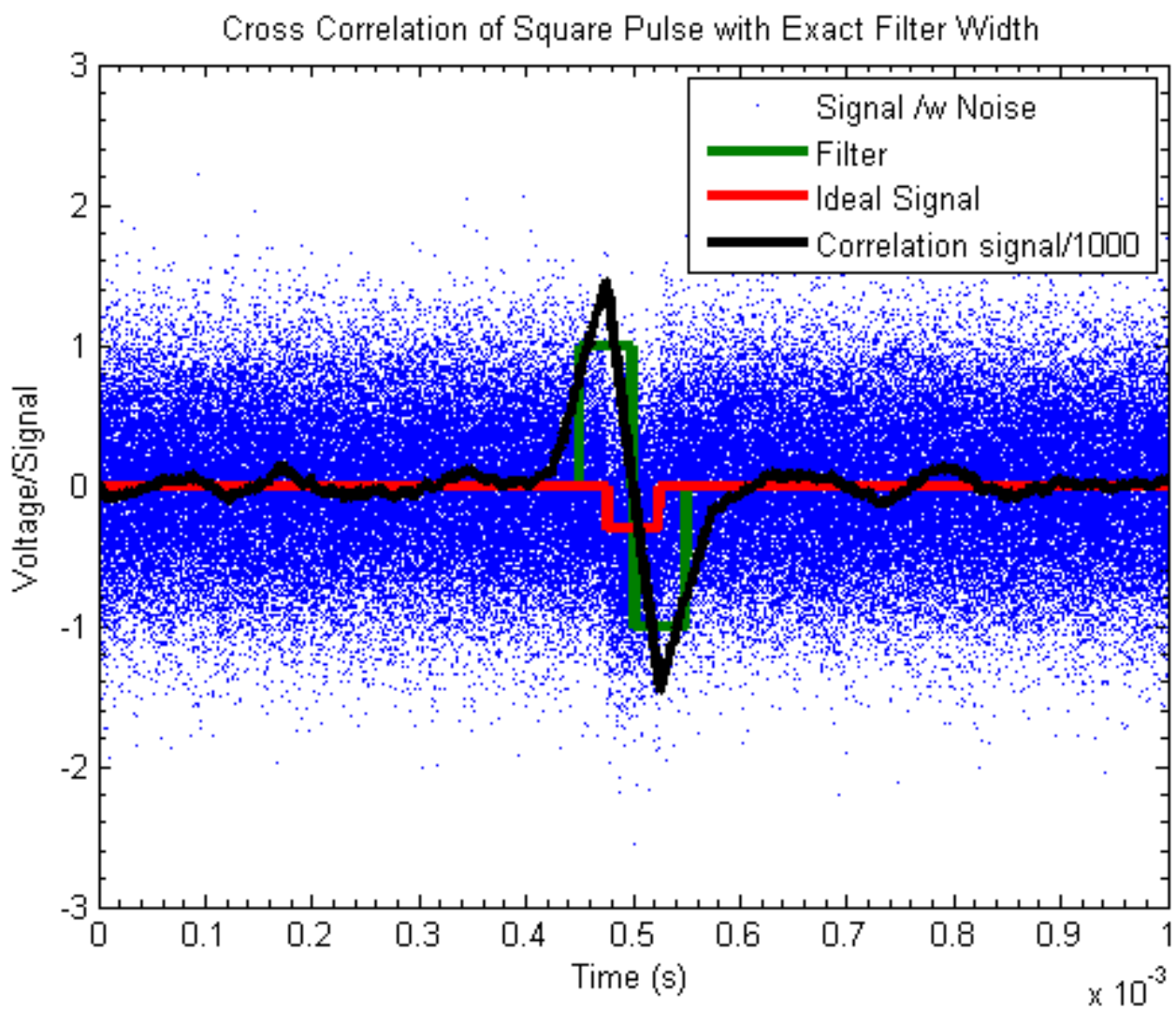

- Signal embedded in noise can be extracted through cross correlation.
- Known signal shape allows precise choice of filter shape
- Maximum of correlation directly proportional to pulse height and width
- Pulse height proportional to charge of particle
- Pulse width proportional to velocity of particle
- Mass can be selected

Multiple Filter Response

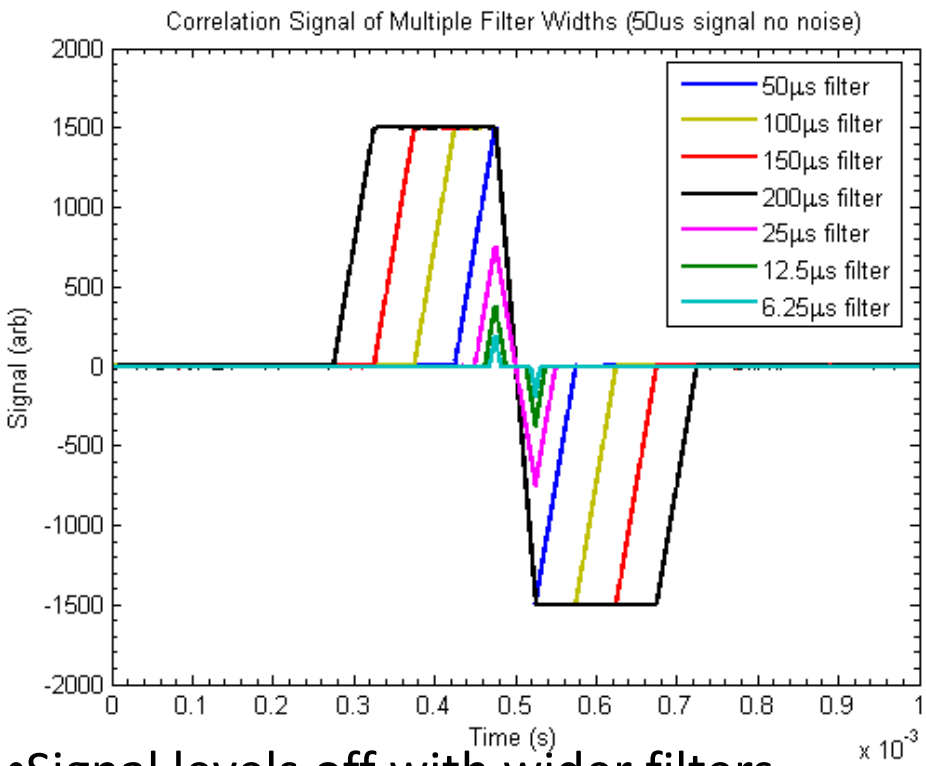

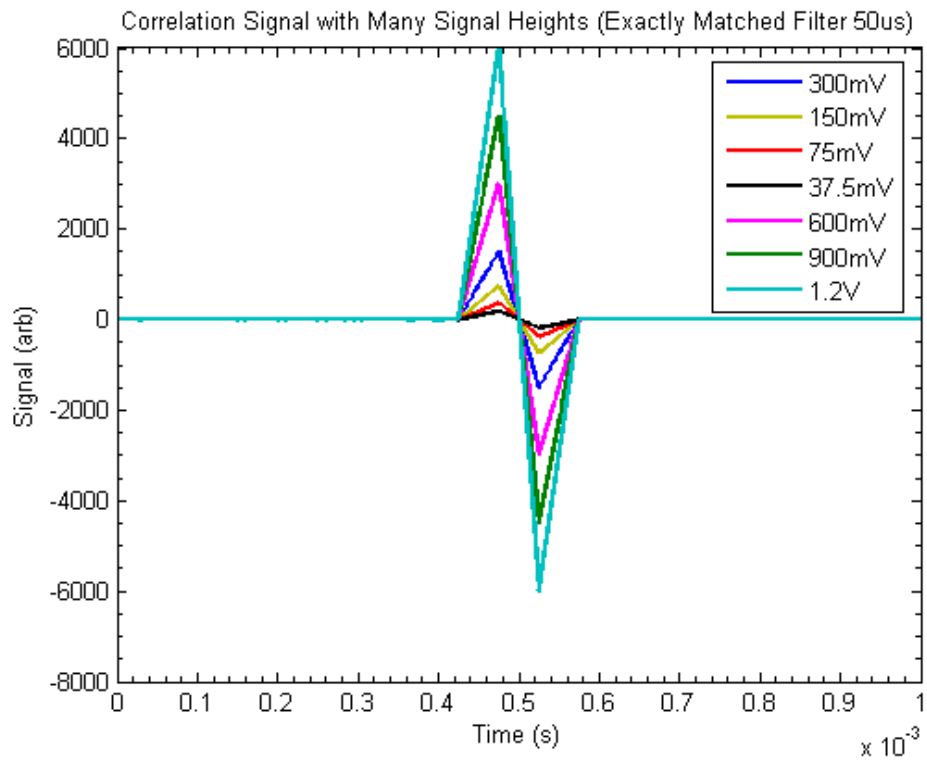

- Signal levels off with wider filters
- Maximum raised with higher signal
- Using many filter widths velocity can be determined by seeing which filters reach maximum and which do not

- Filters slower than particle always reach maximum
- Factoring out velocity allows determination of charge

Multiple Filter Response

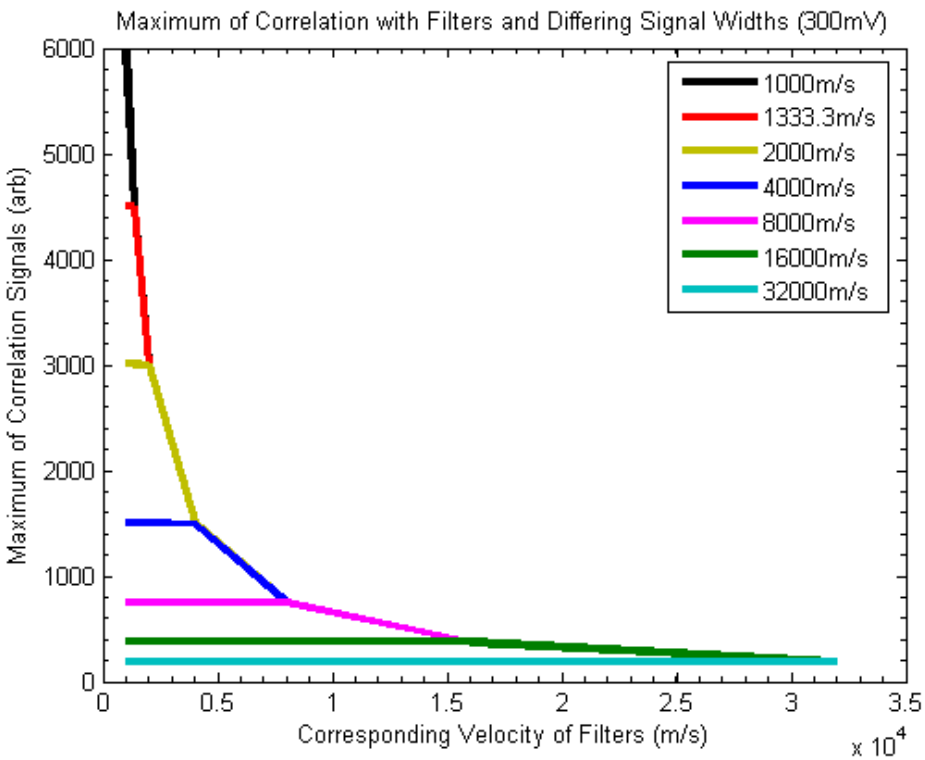

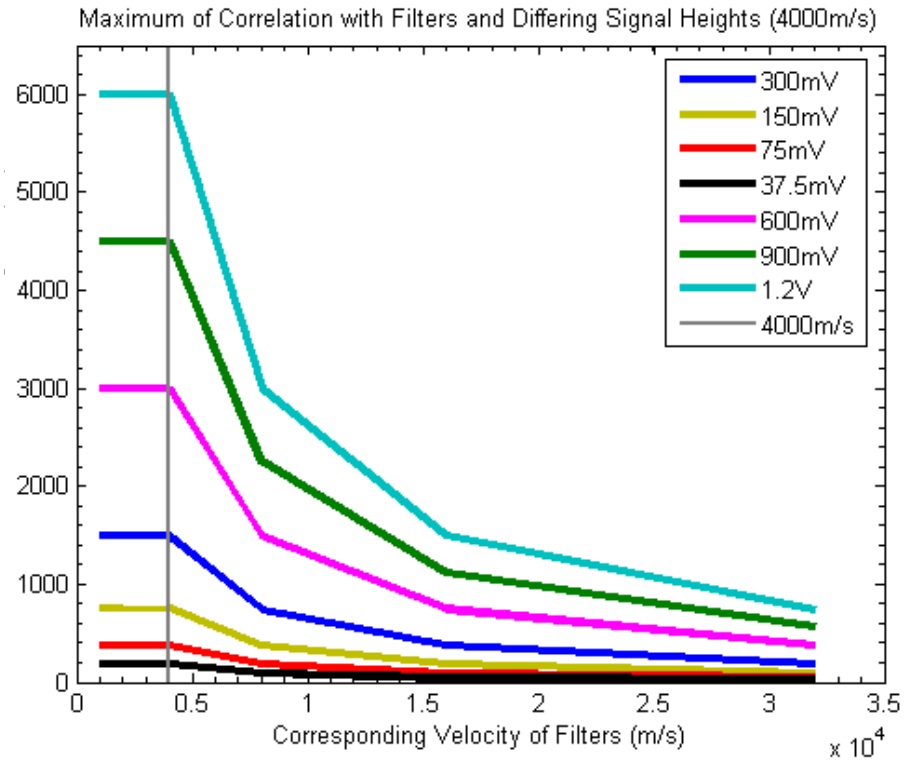

- Where knee occurs determines the velocity of the particles
- Charge can be determined based on where the knee occurs and the height of the plateau
- Using this behavior you can set thresholds based on desired velocity and charge

Current Status of FPGA Work

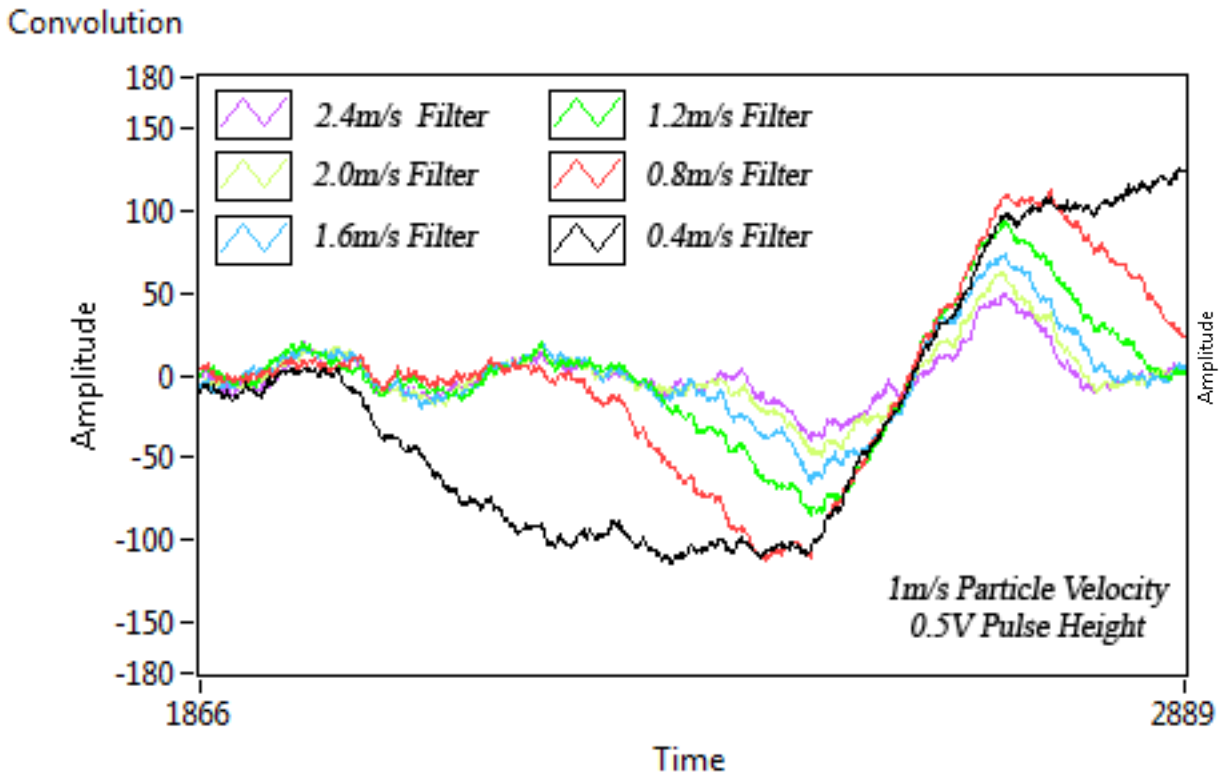

Input Signal

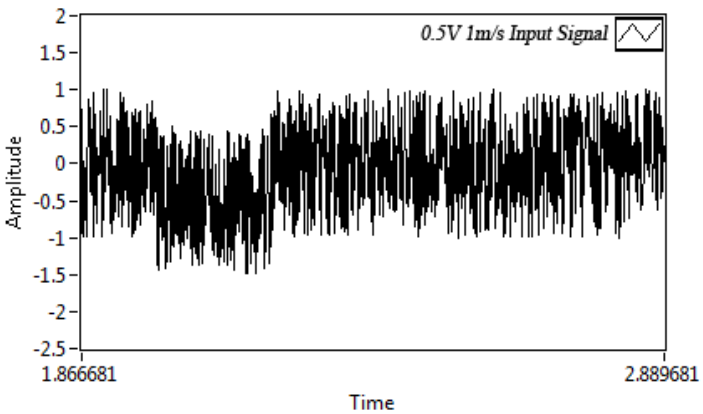

- Using LabVIEW FPGA module to design and simulate working code for FPGA
- Correlation code finished and working
- Working on thresholding algorithms for choosing velocity and charge

Acknowledgements

This work was completed with the help of Michael Wagner, Paige Northway, Evan Thomas, Keith Drake, Tobin Munsat, Mihaly Horanyi and the entire CCLDAS team

Many thanks to Siegfried Auer, Eberhard Grün and Ralf Srama from the Heidelberg Dust Accelerator Facility and the National Electrostatics Corporation