NOTE: SLIT ORIENTATION ON GRAPHICS IS INCORRECT; SLIT CENTER LOCATION IS CORRECT. ALIGN SLIT WITH N/S AXIS.

KES

Activity ID: Orbit 20 OAPEL JUDARKSD SeqNo 01-

Title Darkside Lyman-alpha **Instrument** UVS

Requestor UVS-AWG/W. KENT TOBISKA **Team** UVS **Working Group** AWG

Time System CDS **Load ID** 20A **Calendar Date** 05/04/99 Week 70

Start	JEE+CDS 00001161:00:0	99-124/12:34:30.800	JEE+000/19:33:54.000
End	JEE+CDS 00001195:00:0	99-124/13:08:53.466	JEE+000/20:08:16.666
Duration	00000034:00:0	000/00:34:22.666	000/00:34:22.666

Top Label 20JUDARKSD01-

Bottom Label realtime

Plot Key UVS **Type** SCI

CDS Bytes 286 **Report Options** BOTH **Scan Platform** Yes

CDS Source OAP **Spin State** DUAL **DMS** No

Observation Objective

Observe equatorial Lyman-a on Jupiter's darkside to determine long-term changes as a function of System III longitude from charged particle impact upon thermospheric hydrogen. Without the effect of sunlight, H emission variations result from magnetospheric plasma interaction and dynamical mixing from lower layers. This is a real-time observation for 1/2 hour using a G/G Lyman-a 88 step 2 position miniscan at a distance from Jupiter = 15.2 Rj.

MBTG = 0.017712
26 RIMs integration time

GEM Objective Phase 1 - Magnetospheric interactions

Design Detail

```
PSID  CDS  RIM   COMMAND PARAMETERS
384AA 00   00:00 COMMNT UVS RIM 0
157AA 122  03:00  CMDRS PLAN_DUR = 31 RIMS; EST_UVS_CMDS = 8 (34UVS)
           04:00      1  UVG:DF,FIXED,NORM,NORM,NORM,SAME,0,OFF,OFF,ON,ON,OFF,NOOVR,1,2C,7D,00,2C
           11:00      8  OFF:C1,FIXED,NORM,NORM,NORM,SAME,0,OFF,OFF,ON,OFF,OFF,NOOVR,1,2C,05,00,00
           13:00     10  UVG:DF,FIXED,NORM,NORM,NORM,SAME,0,OFF,OFF,ON,ON,OFF,NOOVR,1,2C,7D,00,2C
           23:00     20  OFF:C1,FIXED,NORM,NORM,NORM,SAME,0,OFF,OFF,ON,OFF,OFF,NOOVR,1,2C,05,00,00
           24:00     21  UVG:DF,FIXED,NORM,NORM,NORM,SAME,0,OFF,OFF,ON,ON,OFF,NOOVR,1,2C,7D,00,2C
           27:00     24  OFF:C1,FIXED,NORM,NORM,NORM,SAME,0,OFF,OFF,ON,OFF,OFF,NOOVR,1,2C,05,00,00
           28:00     25  UVG:DF,FIXED,NORM,NORM,NORM,SAME,0,OFF,OFF,ON,ON,OFF,NOOVR,1,2C,7D,00,2C
           34:00     31  OFF:C1,FIXED,NORM,NORM,NORM,SAME,0,OFF,OFF,ON,OFF,OFF,NOOVR,1,2C,05,00,00
349AA 28   03:69 UVFLSH DISCRD,UVS
165AA 27   04:00 TARGET Lat/Lon = 0/296; (RA/Dec = 63.54/23.36)
165AB 27   13:00 TARGET Lat/Lon = 0/301; (RA/Dec = 63.90/23.42)
165AC 27   24:00 TARGET Lat/Lon = 0/307; (RA/Dec = 64.33/23.49)
165AD 27   28:00 TARGET Lat/Lon = 0/309; (RA/Dec = 64.49/23.52)
349AB 28   33:69 UVFLSH PACKET,UVS
```

Tue Mar 30 16:01:49 1999

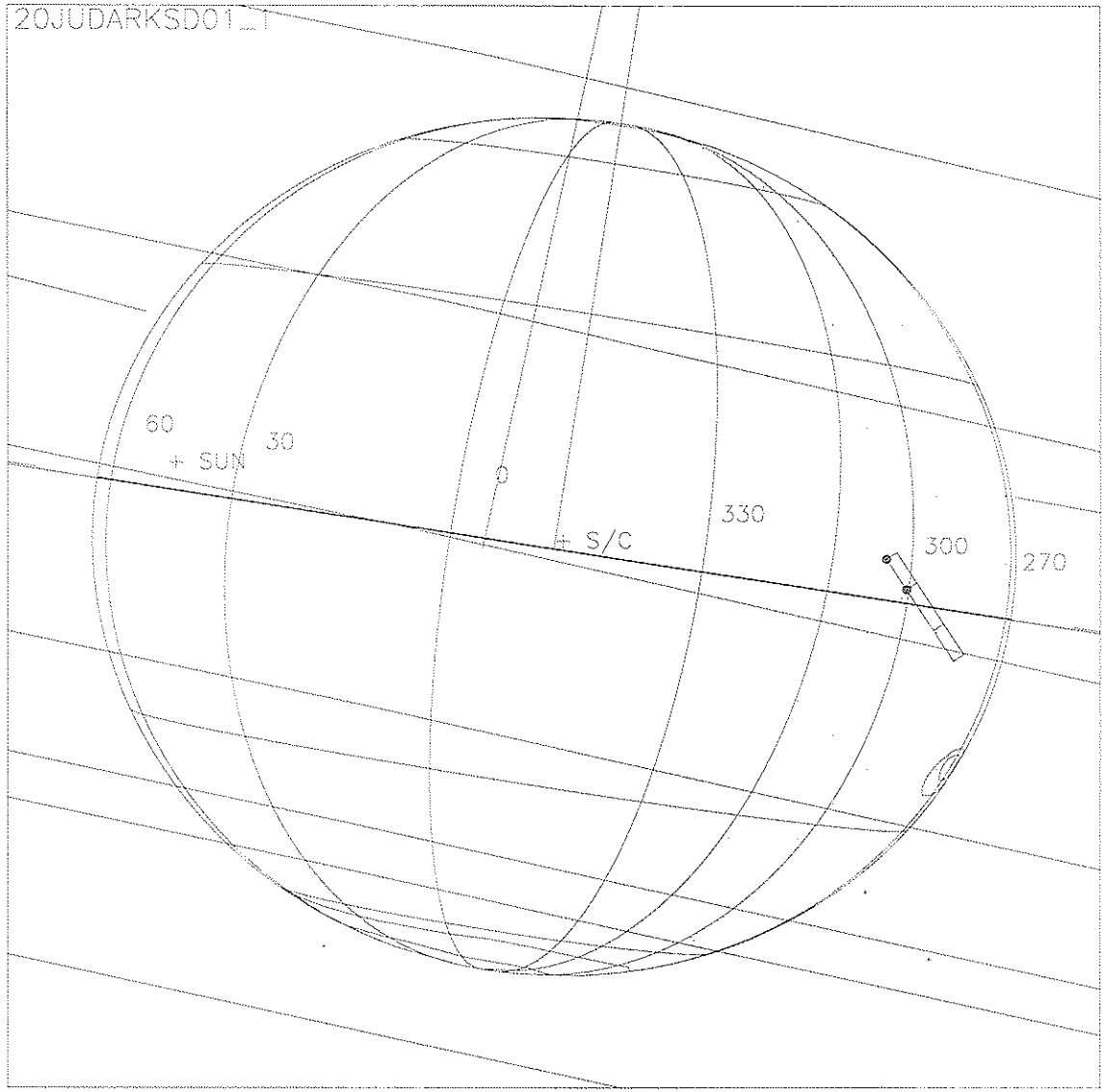

Start UTC_TIME : 1999-124 // 12:38:28.321
No End Time :
Start SCLK : 1/04980543:00:0:0

Target Body : JUPITER
Target Ra/Dec : 66.83/ 23.88 Deg
S/C to Body Center : 1090102. Km (15.247882 Rj)
Z-axis Pointing (Ra / Dec) : 198.35 / -3.06 Deg

Tue Mar 30 16:05:52 1999

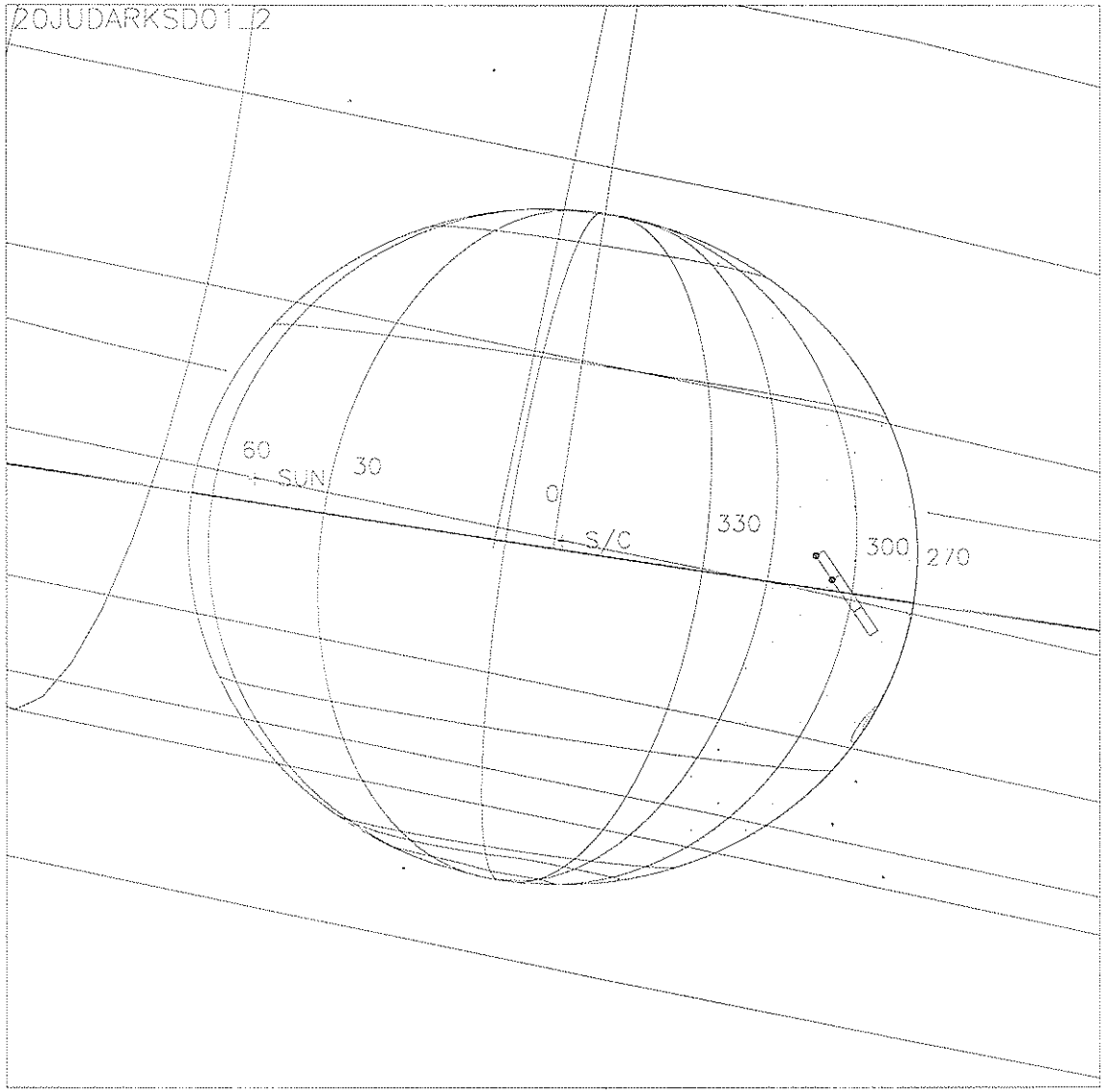

Start UTC_TIME : 1999-124 // 12:47:34.321
No End Time :
Start SCLK : 1/04980552:00:0:0

Target Body : JUPITER
Target Ra/Dec : 67.19/ 23.93 Deg
S/C to Body Center : 1094866. Km (15.314527 Rj)
Z-axis Pointing (Ra / Dec) : 198.55 / -3.08 Deg

Tue Mar 30 16:07:14 1999

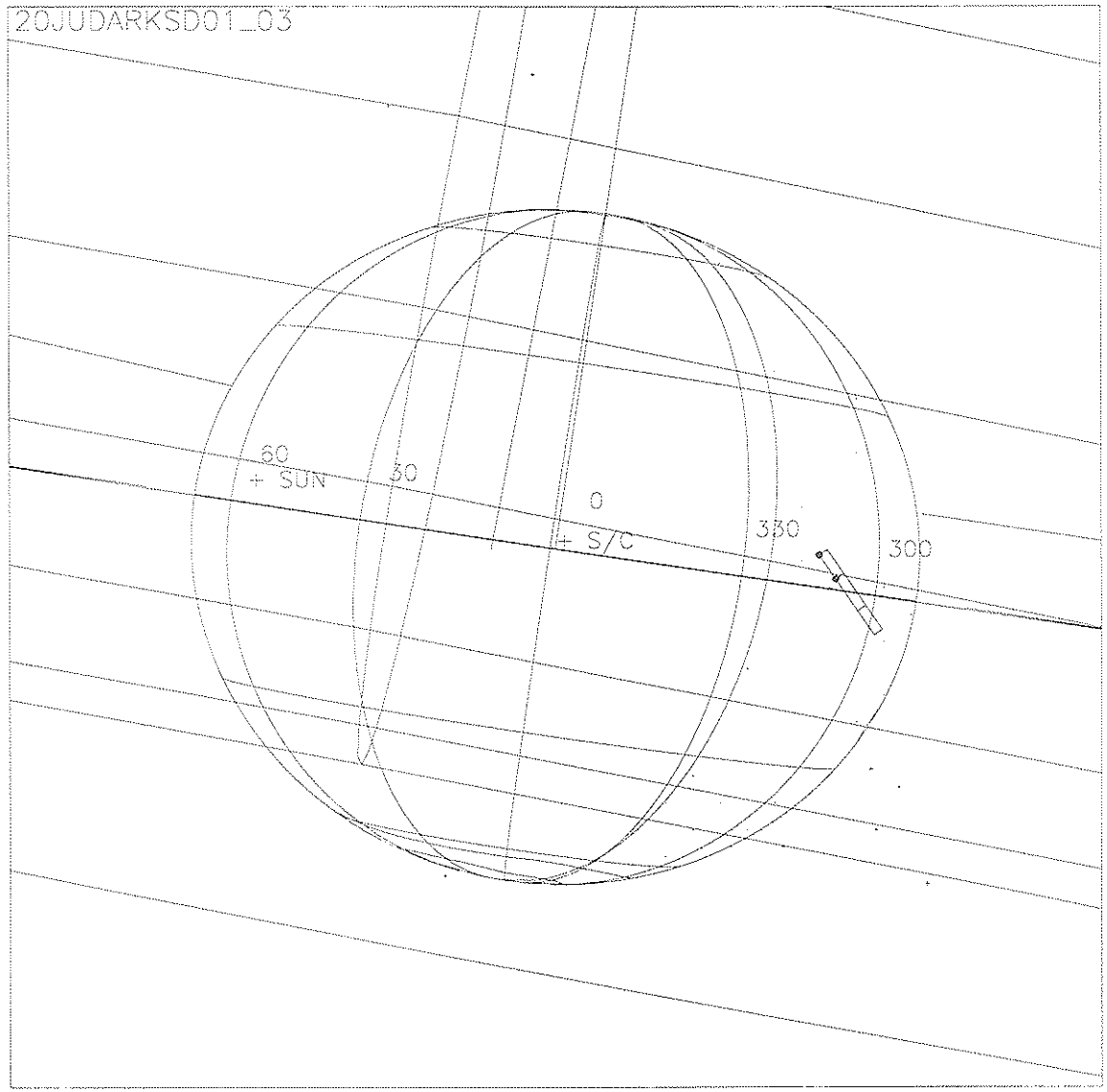

Start UTC_TIME : 1999-124 // 12:58:41.654
No End Time :
Start SCLK : 1/04980563:00:0:0

Target Body : JUPITER
Target Ra/Dec : 67.62/ 23.99 Deg
S/C to Body Center : 1100696. Km (15.396075 Rj)
Z-axis Pointing (Ra / Dec) : 198.55 / -3.06 Deg

Tue Mar 30 16:08:23 1999

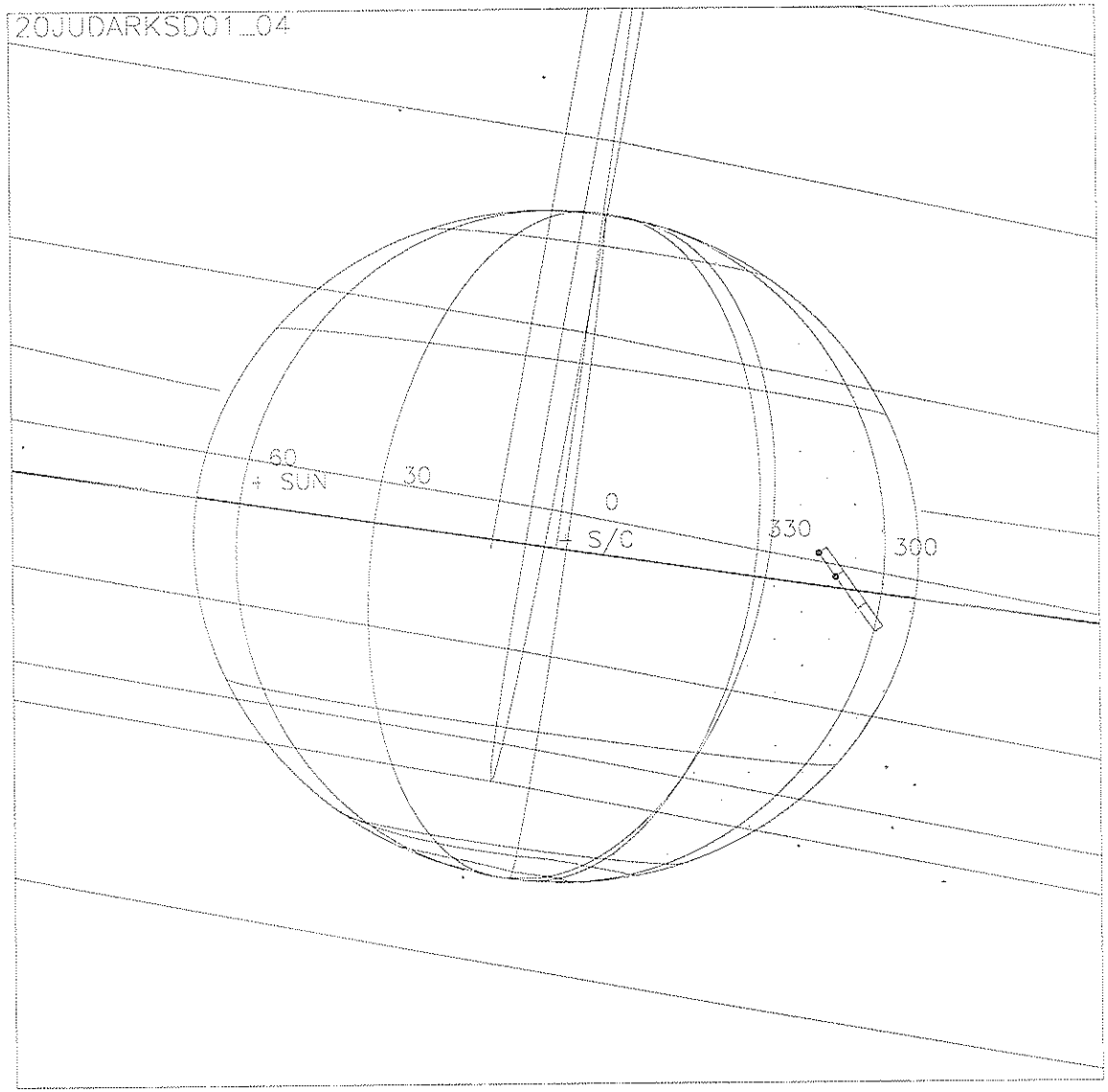

Start UTC_TIME : 1999-124 // 13:02:44.320
No End Time :
Start SCLK : 1/04980567:00:0:0

Target Body : JUPITER
Target Ra/Dec : 67.78/ 24.01 Deg
S/C to Body Center : 1102818. Km (15.425752 Rj)
Z-axis Pointing (Ra / Dec) : 198.35 / -3.06 Deg

Activity ID:	Orbit 20	OAPEL	JUWAVTRK	SeqNo	03-
Title	UVS AWG feature track			Instrument	UVS
Requestor	UVS-AWG/W. KENT TOBISKA	Team	UVS	Working Group	AWG

Time System	CDS	Load ID	20A	Calendar Date	05/04/99	Week	70

Start	JEE+CDS 00001195:00:0	99-124/13:08:53.466	JEE+000/20:08:16.666
End	JEE+CDS 00001199:00:0	99-124/13:12:56.133	JEE+000/20:12:19.333
Duration	00000004:00:0	000/00:04:02.667	000/00:04:02.667

Top Label	20JUWAVTRK03-				
Bottom Label	realtime				
Plot Key	UVS	Type	SCI		
CDS Bytes	66	Report Options	BOTH	Scan Platform	Yes
CDS Source	OAP	Spin State	DUAL	DMS	Yes

Observation Objective

20JUWAVTRK03: AWG feature track with SSI to look at equatorial waves.

Rj = 15.3
UVS configuration: full F/F scans.

MBTG = 0.017712

Design Detail

```
PSID  CDS  RIM   COMMAND PARAMETERS
384AC 00   00:00 COMMNT UVS RIM 0
157AC 38   00:00  CMDRS PLAN_DUR = 4 RIMS; EST_UVS_CMDS = 2 (34UVS)
           01:00      1   UVF:07,SCAN,NORM,NORM,NORM,SAME,0,ON,OFF,OFF,ON,OFF,NOOVR,1,00,9C,00,00
           04:00      4   OFF:C1,FIXED,NORM,NORM,NORM,SAME,0,OFF,OFF,ON,OFF,OFF,NOOVR,1,2C,05,00,00
349AB 00  -00:69 UVFLSH (previous observation zeros buffer)
165KY 00   01:00 TARGET Lat/Lon = 0/43.5; use SSI target
349JB 28   03:69 UVFLSH PACKET,UVS
```

Tue Mar 30 16:10:00 1999

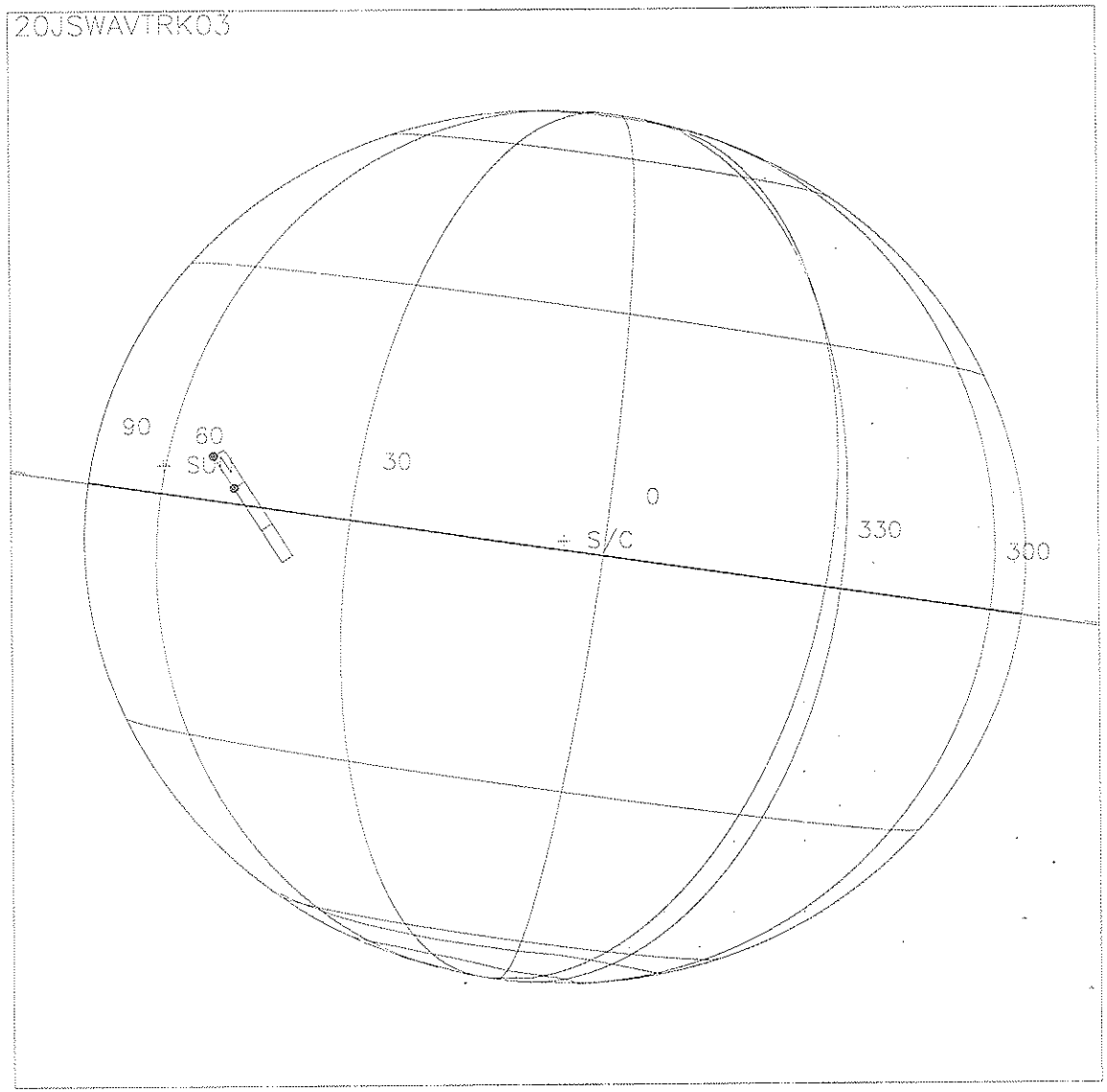

Start UTC_TIME : 1999-124 // 13:09:48.987
No End Time :
Start SCLK : 1/04980574:00:0:0

Target Body : JUPITER
Target Ra/Dec : 68.05/ 24.05 Deg
S/C to Body Center : 1106533. Km (15.477718 Rj)
Z-axis Pointing (Ra / Dec) : 198.35 / -3.06 Deg

Activity ID:	Orbit 20	OAPEL	JUWAVTRK	SeqNo	13-
Title	UVS AWG feature track			Instrument	UVS
Requestor	UVS-AWG/W. KENT TOBISKA	Team	UVS	Working Group	AWG

Time System	CDS	Load ID	20A	Calendar Date	05/04/99	Week	70

Start	JEE+CDS 00001210:00:0	99-124/13:24:03.466	JEE+000/20:23:26.666
End	JEE+CDS 00001214:00:0	99-124/13:28:06.133	JEE+000/20:27:29.333
Duration	00000004:00:0	000/00:04:02.667	000/00:04:02.667

Top Label	20JUWAVTRK13-				
Bottom Label	realtime				
Plot Key	UVS	Type	SCI		
CDS Bytes	94	Report Options	BOTH	Scan Platform	Yes
CDS Source	OAP	Spin State	DUAL	DMS	Yes

Observation Objective

20JUWAVTRK13: AWG feature track with SSI to look at equatorial waves.

Rj = 15.4
UVS configuration: full F/F scans.

MBTG = 0.017712

Design Detail

```
PSID   CDS   RIM   COMMAND PARAMETERS
384AD  00    00:00 COMMNT UVS RIN 0
157AD  38    00:00  CMDRS PLAN_DUR = 4 RIMS; EST_UVS_CMDS = 2 (34UVS)
             01:00      1  UVF:07,SCAN,NORM,NORM,NORM,SAME,0,ON,OFF,OFF,ON,OFF,NOOVR,1,00,9C,00,00
             04:00      4  OFF:C1,FIXED,NORM,NORM,NORM,SAME,0,OFF,OFF,ON,OFF,OFF,NOOVR,1,2C,05,00,00
349JC  28    00:69 UVFLSH DISCRD,UVS
165LY  00    01:00 TARGET Lat/Lon = 0/43.43; use SSI target
349JD  28    03:69 UVFLSH PACKET.UVS
```

Tue Mar 30 16:12:26 1999

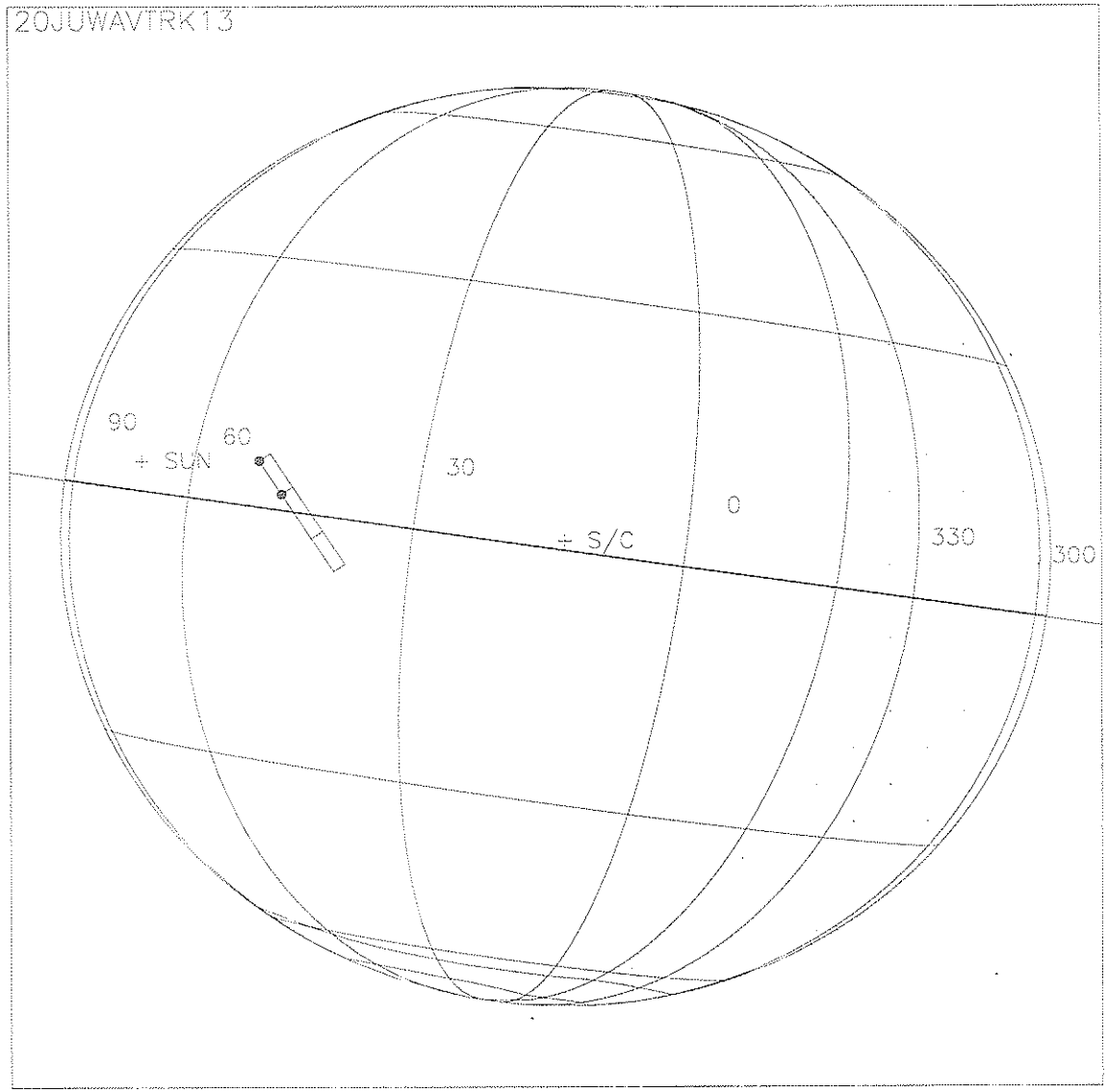

Start UTC_TIME : 1999-124 // 13:24:58.986
No End Time :
Start SCLK : 1/04980589:00:0:0

Target Body : JUPITER
Target Ra/Dec : 68.63/ 24.12 Deg
S/C to Body Center : 1114503. Km (15.589196 Rj)
Z-axis Pointing (Ra / Dec) : 198.35 / -3.05 Deg

Activity ID: Orbit 20 **OAPEL** JUWAVTRK **SeqNo** 23-

Title UVS AWG feature track **Instrument** UVS

Requestor UVS-AWG/W. KENT TOBISKA **Team** UVS **Working Group** AWG

Time System CDS **Load ID** 20A **Calendar Date** 05/04/99 **Week** 70

Start	JEE+CDS 00001225:00:0	99-124/13:39:13.466	JEE+000/20:38:36.666
End	JEE+CDS 00001229:00:0	99-124/13:43:16.133	JEE+000/20:42:39.333
Duration	00000004:00:0	000/00:04:02.667	000/00:04:02.667

Top Label 20JUWAVTRK23-

Bottom Label realtime

Plot Key UVS **Type** SCI

CDS Bytes 94 **Report Options** BOTH **Scan Platform** Yes

CDS Source OAP **Spin State** DUAL **DMS** Yes

Observation Objective

20JUWAVTRK23: AWG feature track with SSI to look at equatorial waves.

Rj = 15.5
UVS configuration: full F/F scans.

MBTG = 0.017712

Design Detail

```
PSID   CDS   RIM   COMMAND PARAMETERS
384AE  00   00:00  COMMNT UVS RIM 0
157AE  38   00:00   CMDRS PLAN_DUR = 4 RIMS; EST_UVS_CMDS = 2 (34UVS)
            01:00       1   UVF:07,SCAN,NORM,NORM,NORM,SAME,0,ON,OFF,OFF,ON,OFF,NOOVR,1,00,9C,00,00
            04:00       4   OFF:C1,FIXED,NORM,NORM,NORM,SAME,0,OFF,OFF,ON,OFF,OFF,NOOVR,1,2C,05,00,00
349JE  28   00:69  UVFLSH DISCRD,UVS
165LD  00   01:00  TARGET Lat/Lon = 0/43.36; use SSI target
349JF  28   03:69  UVFLSH PACKET,UVS
```

Tue Mar 30 16:14:08 1999

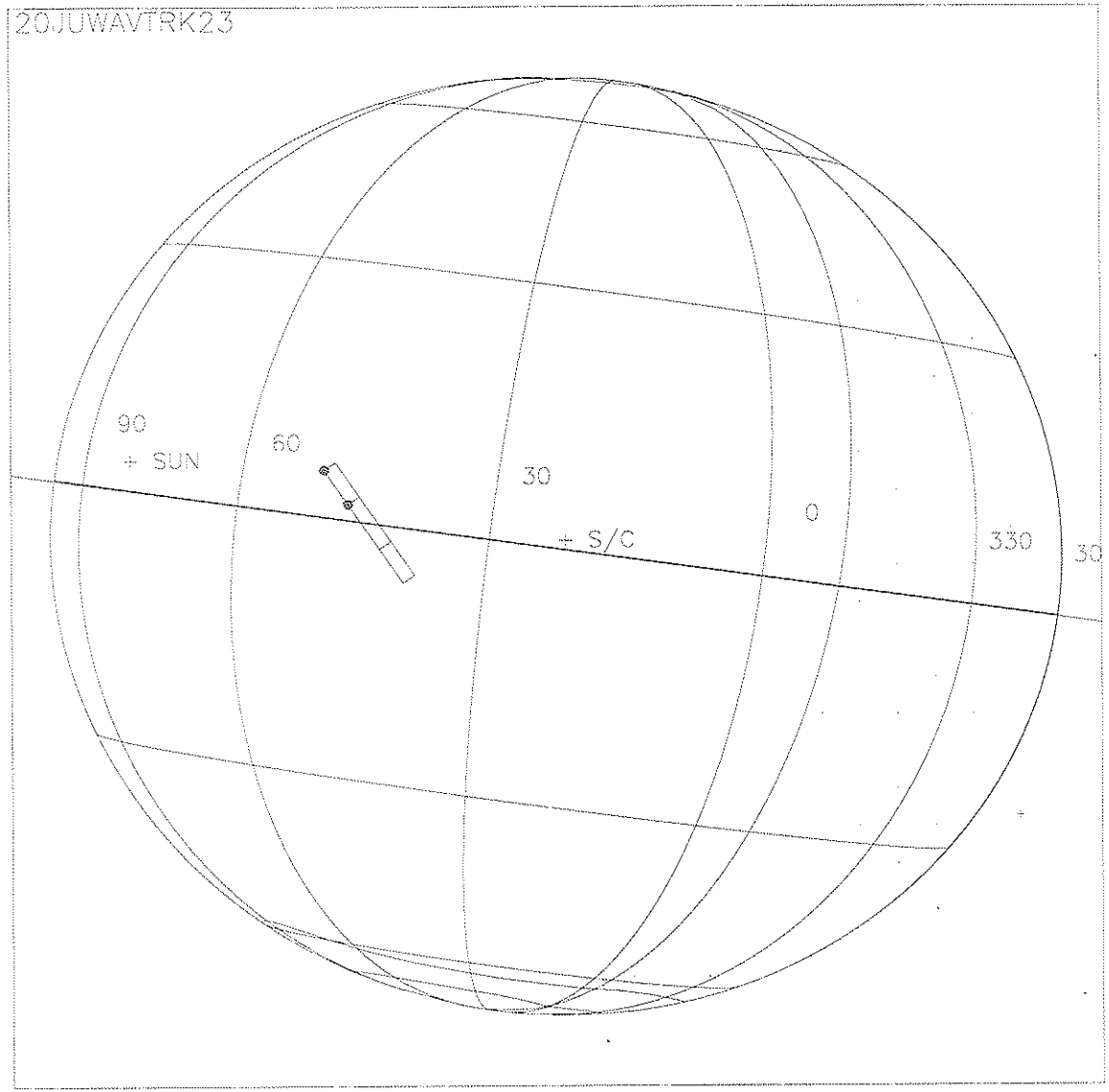

Start UTC_TIME : 1999-124 // 13:40:08.985
No End Time :
Start SCLK : 1/04980604:00:0:0

Target Body : JUPITER
Target Ra/Dec : 69.20/ 24.20 Deg
S/C to Body Center : 1122484. Km (15.700832 Rj)
Z-axis Pointing (Ra / Dec) : 198.35 / -3.06 Deg

Activity ID: Orbit 20 **OAPEL** JUJETTRK **SeqNo** 01-

Title UVS AWG feature track **Instrument** UVS

Requestor UVS-AWG/W. KENT TOBISKA **Team** UVS **Working Group** AWG

Time System CDS **Load ID** 20A **Calendar Date** 05/04/99 **Week** 70

Start	JEE+CDS 00001311:00:0	99-124/15:06:10.800	JEE+000/22:05:34.000
End	JEE+CDS 00001315:00:0	99-124/15:10:13.466	JEE+000/22:09:36.666
Duration	00000004:00:0	000/00:04:02.666	000/00:04:02.666

Top Label 20JUJETTRK01-

Bottom Label realtime

Plot Key UVS **Type** SCI

CDS Bytes 94 **Report Options** BOTH **Scan Platform** Yes

CDS Source OAP **Spin State** DUAL **DMS** Yes

Observation Objective

```
20JUJETTRK01:  AWG feature track with SSI to look at high speed jets.

Rj = 16.2
UVS configuration: full F/F scans.

MBTG = 0.017712
```

Design Detail

```
PSID  CDS  RIM   COMMAND PARAMETERS
384AH 00   00:00 COMMNT UVS RIM 0
157AH 38   00:00  CMDRS PLAN_DUR = 4 RIMS; EST_UVS_CMDS = 2 (34UVS)
           01:00      1  UVF:07,SCAN,NORM,NORM,NORM,SAME,0,ON,OFF,OFF,ON,OFF,NOOVR,1,00,9C,00,00
           04:00      4  OFF:C1,FIXED,NORM,NORM,NORM,SAME,0,OFF,OFF,ON,OFF,OFF,NOOVR,1,2C,05,00,00
349JG 28   00:69 UVFLSH DISCRD,UVS
165KS 00   01:00 TARGET Lat/Lon = 23.8/91.4; (RA/Dec = TBD); use SSI target
349JH 28   03:69 UVFLSH PACKET,UVS
```

Tue Mar 30 20:01:15 1999

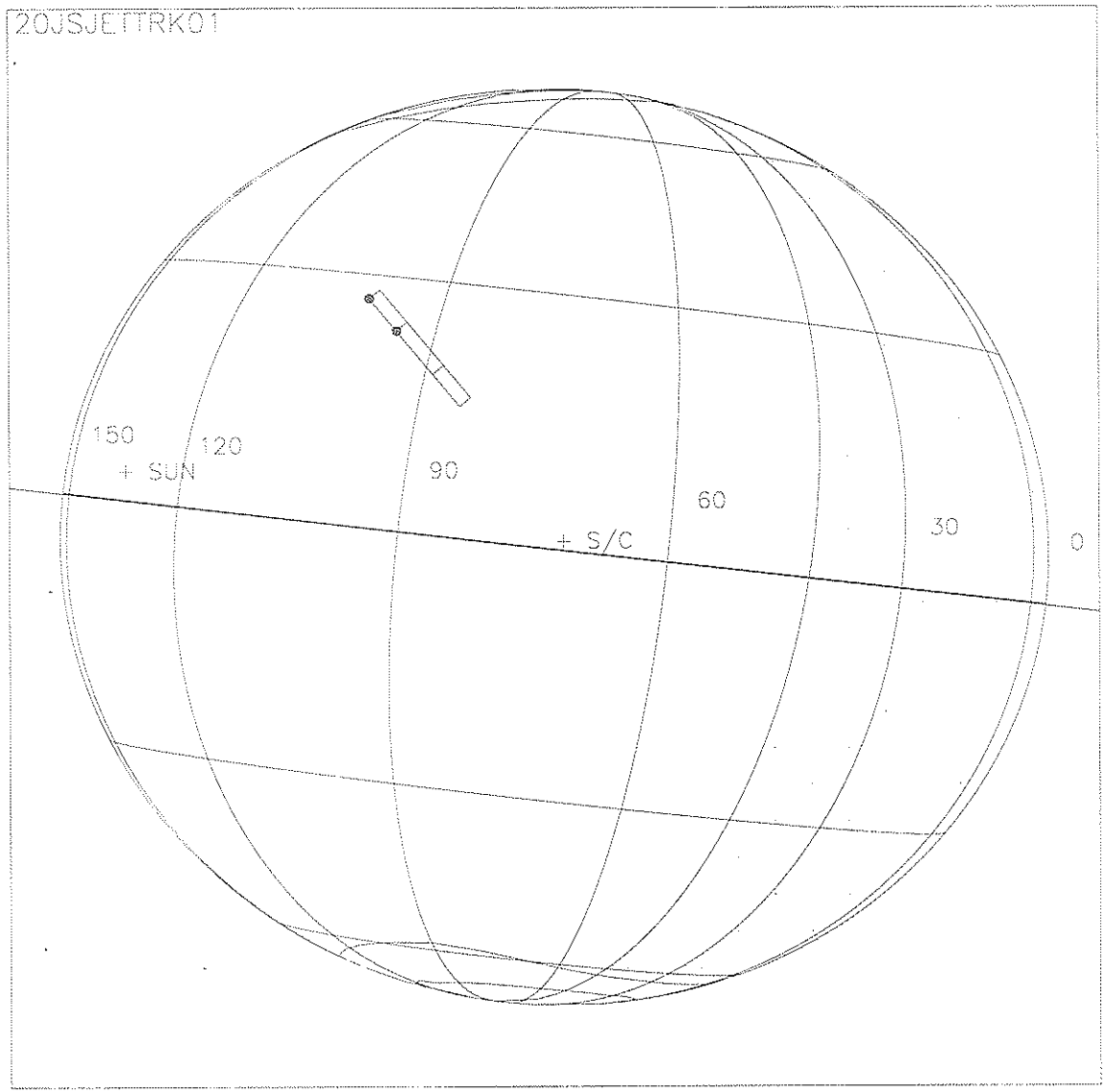

Start UTC_TIME : 1999-124 // 15:07:06.316
No End Time :
Start SCLK : 1/04980690:00:0:0

Target Body : JUPITER
Target Ra/Dec : 72.34/ 24.56 Deg
S/C to Body Center : 116841:. Km (16.343365 Rj)
Z-axis Pointing (Ra / Dec) : 198.35 / -3.06 Deg

Activity ID: Orbit 20 **OAPEL** JUBRITSD **SeqNo** 03-

Title Brightside hydrocarbons **Instrument** UVS

Requestor UVS-AWG/W. KENT TOBISKA **Team** UVS **Working Group** AWG

Time System CDS **Load ID** 20A **Calendar Date** 05/04/99 **Week** 70

Start	JEE+CDS 00001319:00:0	99-124/15:14:16.133	JEE+000/22:13:39.333
End	JEE+CDS 00001349:00:0	99-124/15:44:36.133	JEE+000/22:43:59.333
Duration	00000030:00:0	000/00:30:20.000	000/00:30:20.000

Top Label 20JUBRITSD03-

Bottom Label realtime

Plot Key UVS **Type** SCI

CDS Bytes 360 **Report Options** BOTH **Scan Platform** Yes

CDS Source OAP **Spin State** DUAL **DMS** No

Observation Objective

Observe brightside hydrocarbon emissions to develop a statistically significant acetylene and ammonia spectrum at four latitudes. This study will help understand minor species chemistry related to dynamics in Jupiter's stratosphere/upper troposphere. Low photon count rates require substantial integration time. This is a realtime observation for 6.13 hours during the feature track window using either a G/G 176 step miniscan covering 1496-1755 Å or a G/G full scan at a distance from Jupiter = 16.4 Rj. 4 observation latitudes are north high and mid lat, south mid and high lat. The lighting and view geometry is designed so that 1/mu + 1/mu_0 = 3.88.

MBTG = 0.017712; 26 RIMs integration time
north high latitude; full-scans G/G
GEM Objective Phase 2 - Jupiter atm. dynamics

Design Detail

```
PSID   CDS   RIM   COMMAND  PARAMETERS
384AI  00   00:00  COMMNT  UVS RIM 0
157AI  122  00:00   CMDRS  PLAN_DUR = 30 RIMS; EST_UVS_CMDS = 8 (34UVS)
            01:00      1   UVG:07,SCAN,NORM,NORM,NORM,SAME,0,OFF,OFF,ON,ON,OFF,NOOVR,1,2C,9D,00,00
            11:00     11   OFF:C1,FIXED,NORM,NORM,NORM,SAME,0,OFF,OFF,ON,OFF,OFF,NOOVR,1,2C,05,00,00
            12:00     12   UVG:07,SCAN,NORM,NORM,NORM,SAME,0,OFF,OFF,ON,ON,OFF,NOOVR,1,2C,9D,00,00
            15:00     15   OFF:C1,FIXED,NORM,NORM,NORM,SAME,0,OFF,OFF,ON,OFF,OFF,NOOVR,1,2C,05,00,00
            16:00     16   UVG:07,SCAN,NORM,NORM,NORM,SAME,0,OFF,OFF,ON,ON,OFF,NOOVR,1,2C,9D,00,00
            26:00     26   OFF:C1,FIXED,NORM,NORM,NORM,SAME,0,OFF,OFF,ON,OFF,OFF,NOOVR,1,2C,05,00,00
            27:00     27   UVG:07,SCAN,NORM,NORM,NORM,SAME,0,OFF,OFF,ON,ON,OFF,NOOVR,1,2C,9D,00,00
            30:00     30   OFF:C1,FIXED,NORM,NORM,NORM,SAME,0,OFF,OFF,ON,OFF,OFF,NOOVR,1,2C,05,00,00
349KE  28   00:69  UVFLSH  DISCRD,UVS
165AW  27   01:00  TARGET  Lat/Lon = 48/85.8 (RA/Dec = 72.70/27.06) [3.8779]
117AW  37   02:00  CSMOS   #_strip=2; obs_slw_rt=0.02; repo_dur=0:46; strip_dur=3:45; cn_del_s=-2.1
165AX  27   12:00  TARGET  Lat/Lon = 48/91.6 (RA/Dec = 73.10/27.08) [3.8840]
165AY  27   16:00  TARGET  Lat/Lon = 48/94.0 (RA/Dec = 73.24/27.09) [3.8869]
117AY  37   17:00  CSMOS   #_strip=2; obs_slw_rt=0.02; repo_dur=0:46; strip_dur=3:45; cn_del_s=-2.1
165AZ  27   27:00  TARGET  Lat/Lon = 48/100.6 (RA/Dec = 73.64/27.12) [3.8931]
349KF  28   29:69  UVFLSH  PACKET,UVS
```

Tue Mar 30 20:13:24 1999

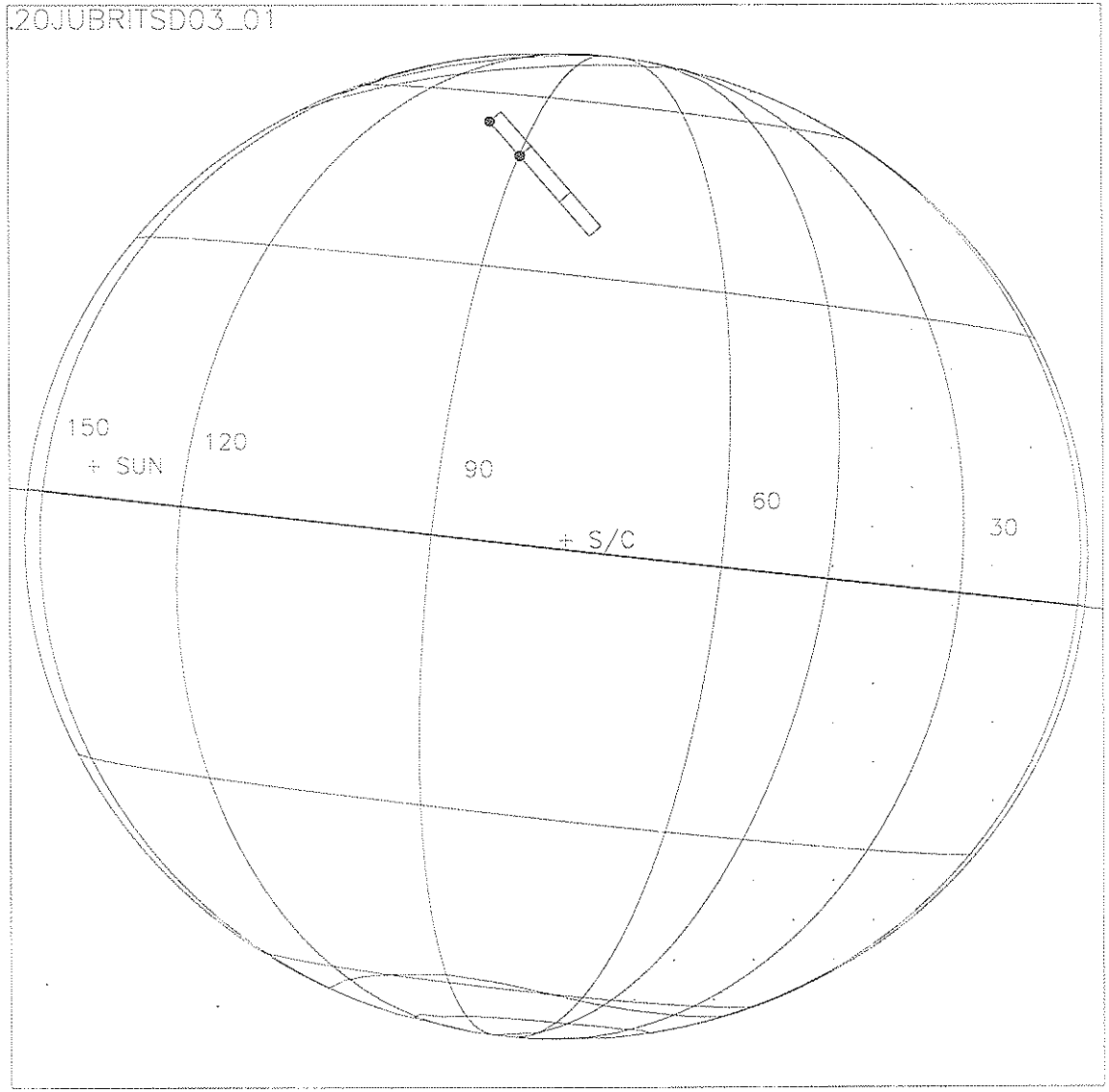

Start UTC_TIME : 1999-124 // 15:15:11.649
No End Time :
Start SCLK : 1/04980698:00:0:0

Target Body : JUPITER
Target Ra/Dec : 72.62/ 24.58 Deg
S/C to Body Center : 1172705. Km (16.403310 Rj)
Z-axis Pointing (Ra / Dec) : 198.35 / -3.06 Deg

Tue Mar 30 20:15:38 1999

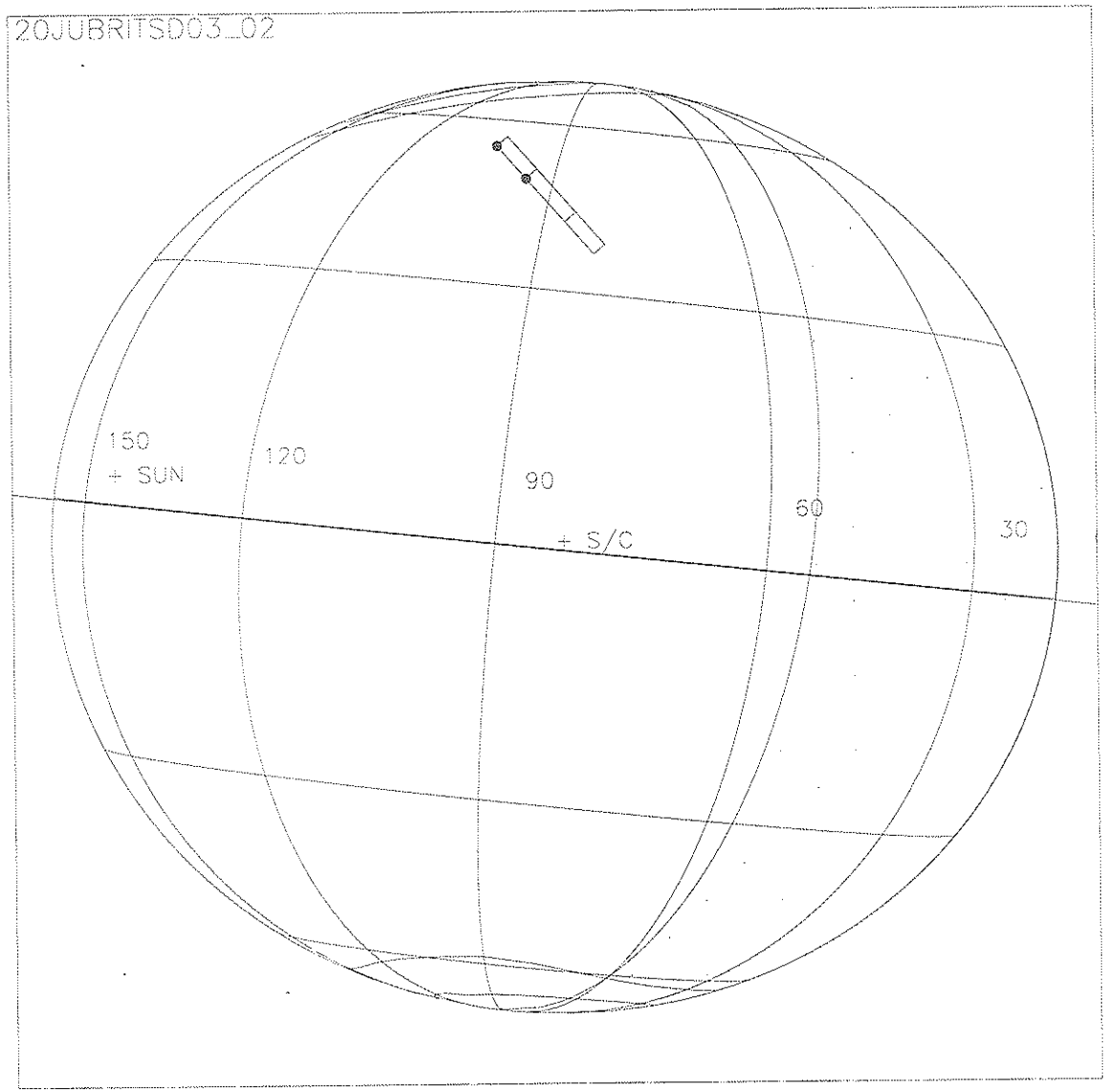

Start UTC_TIME : 1999-124 // 15:26:18.982
No End Time :
Start SCLK : 1/04980709:00:0:0

Target Body : JUPITER
Target Ra/Dec : 73.01/ 24.62 Deg
S/C to Body Center : 1178601. Km (16.485771 Rj)
Z-axis Pointing (Ra / Dec) : 198.35 / -3.06 Deg

Tue Mar 30 20:20:26 1999

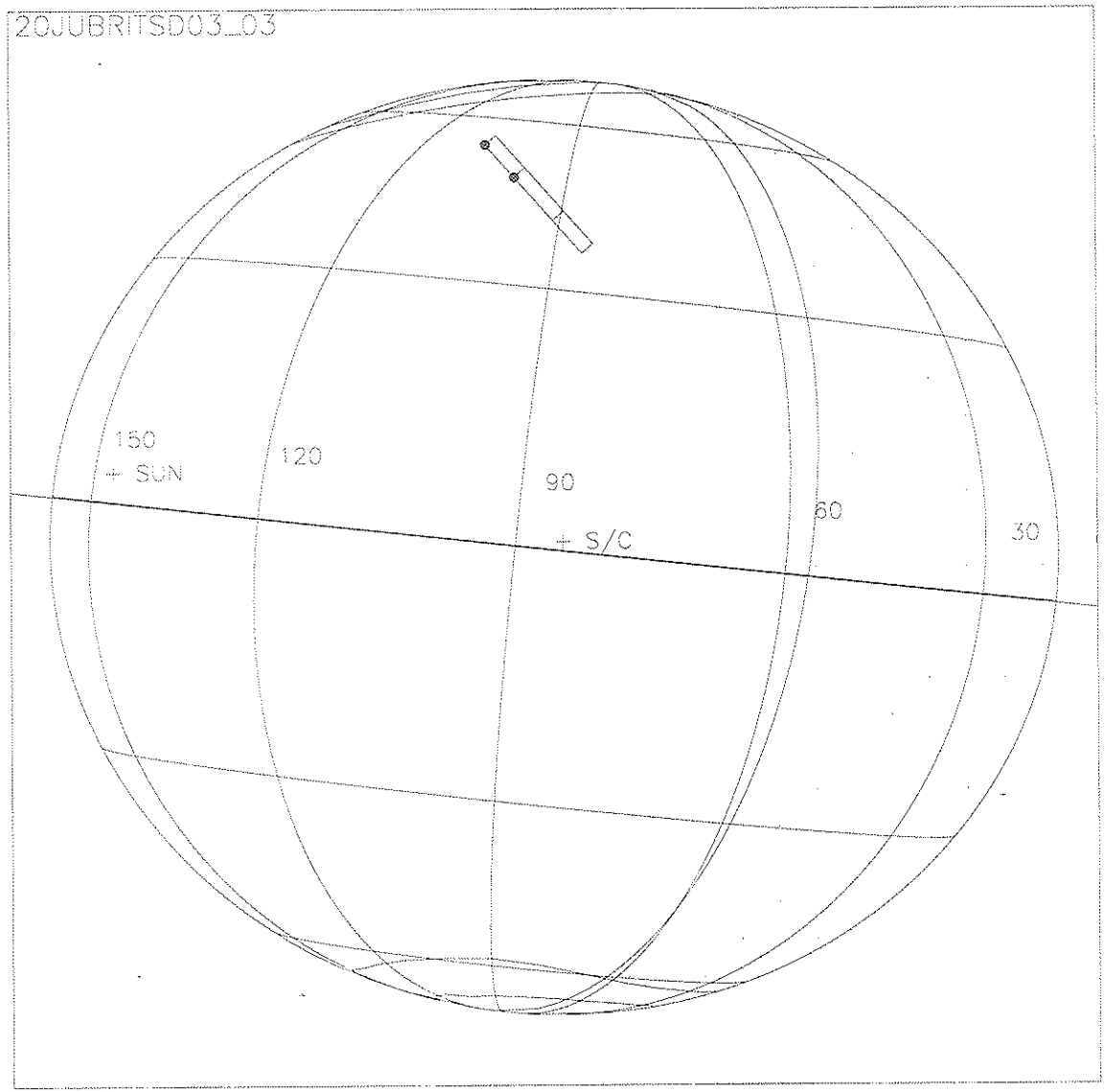

Start UTC_TIME : 1999-124 // 15:30:21.649
No End Time :
Start SCLK : 1/04980713:00:0:0

Target Body : JUPITER
Target Ra/Dec : 73.14/ 24.64 Deg
S/C to Body Center : 1180745. Km (16.515767 Rj)
Z-axis Pointing (Ra / Dec) : 198.35 / -3.06 Deg

Tue Mar 30 20:21:37 1999

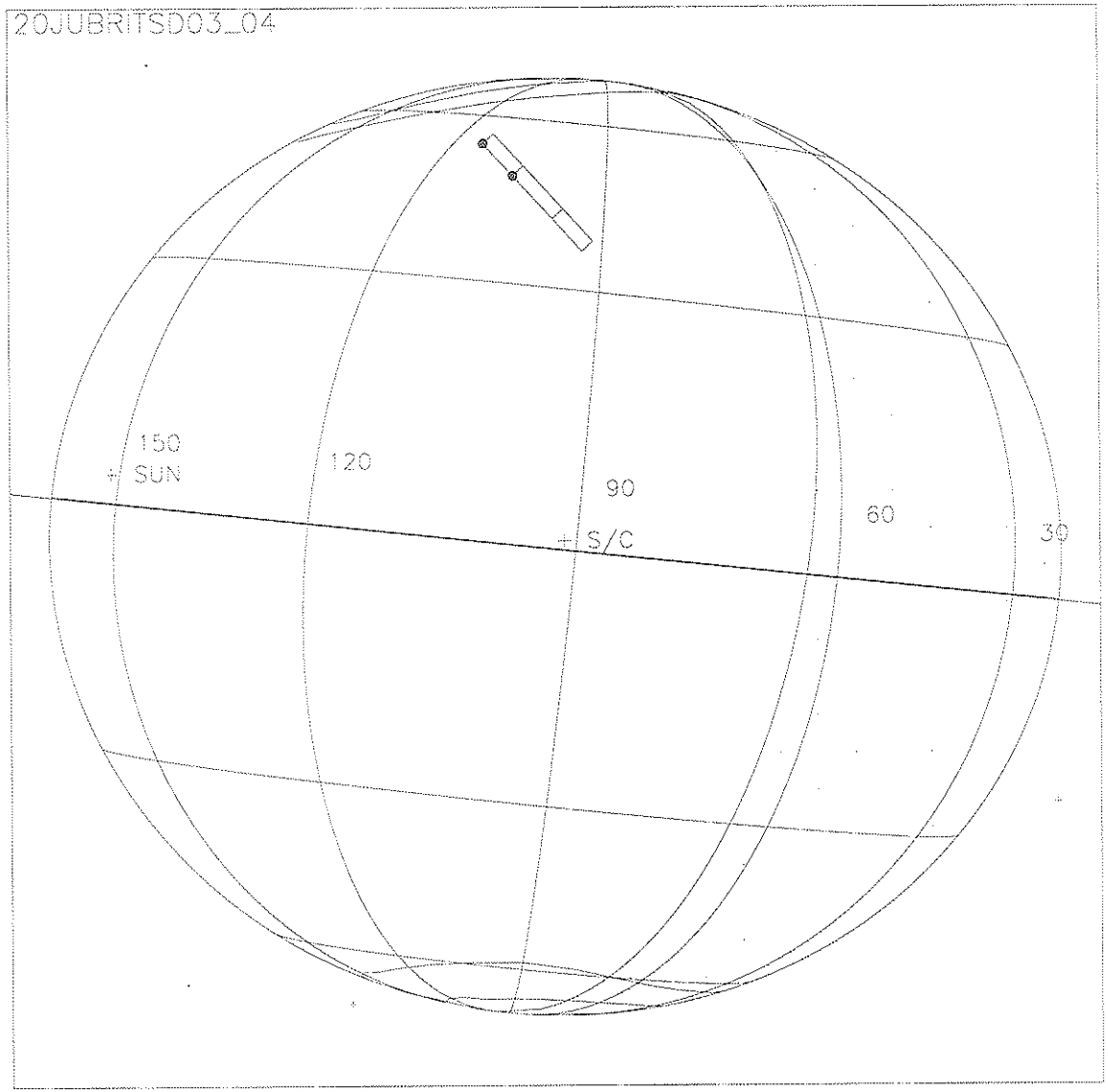

Start UTC_TIME : 1999-124 // 15:41:28.981
No End Time :
Start SCLK : 1/04980724:00:0:0

Target Body : JUPITER
Target Ra/Dec : 73.52/ 24.67 Deg
S/C to Body Center : 1185644. Km (16.598284 Rj)
Z-axis Pointing (Ra / Dec) : 198.35 / -3.06 Deg

Activity ID: Orbit 20 **OAPEL** JUBRITSD **SeqNo** 04-

Title Brightside hydrocarbons **Instrument** UVS

Requestor UVS-AWG/W. KENT TOBISKA **Team** UVS **Working Group** AWG

Time System CDS **Load ID** 20A **Calendar Date** 05/04/99 **Week** 70

Start	JEE+CDS 00001360:00:0	99-124/15:55:43.466	JEE+000/22:55:06.666
End	JEE+CDS 00001388:00:0	99-124/16:24:02.133	JEE+000/23:23:25.333
Duration	00000028:00:0	000/00:28:18.667	000/00:28:18.667

Top Label 20JUBRITSD04-

Bottom Label realtime

Plot Key UVS **Type** SCI

CDS Bytes 158 **Report Options** BOTH **Scan Platform** Yes

CDS Source OAP **Spin State** DUAL **DMS** No

Observation Objective

Observe brightside hydrocarbon emissions to develop a statistically significant acetylene and ammonia spectrum at four latitudes. This study will help understand minor species chemistry related to dynamics in Jupiter's stratosphere/upper troposphere. Low photon count rates require substantial integration time. This is a realtime observation for 6.13 hours during the feature track window using either a G/G 176 step miniscan covering 1496-1755 Å or a G/G full scan at a distance from Jupiter = 16.7 Rj. 4 observation latitudes are north high and mid lat, south mid and high lat. The lighting and view geometry is designed so that 1/mu + 1/mu_0 = 3.88.

MBTG = 0.017712; 27 RIMs integration time
north high latitude; 176-step mini-scan G/G
GEM Objective Phase 2 - Jupiter atm. dynamics

Design Detail

```
PSID  CDS  RIM   COMMAND PARAMETERS
384AK 00   00:00 COMMNT UVS RIM 0
157AK 38   00:00  CMDRS PLAN_DUR = 28 RIMS; EST_UVS_CMDS = 2 (34UVS)
           01:00      1  UVG:E3,FIXED,NORM,NORM,NORM,SAME,0,OFF,OFF,ON,ON,OFF,NOOVR,1,1A,8E,00,00
           28:00     28  OFF:C1,FIXED,NORM,NORM,NORM,SAME,0,OFF,OFF,ON,OFF,OFF,NOOVR,1,2C,05,00,00
349KG 28   00:69 UVFLSH DISCRD,UVS
165CB 27   01:00 TARGET Lat/Lon = 48/110.2 (RA/Dec = 74.20/27.15) [3.8752]
117CB 37   02:00 CSMOS  #_strip=6; obs_slw_rt=0.02; repo_dur=0:46; strip_dur=3:45; cn_del_s=-2.3
349KH 28   27:69 UVFLSH PACKET,UVS
```

Thu Apr 1 00:30:52 1999

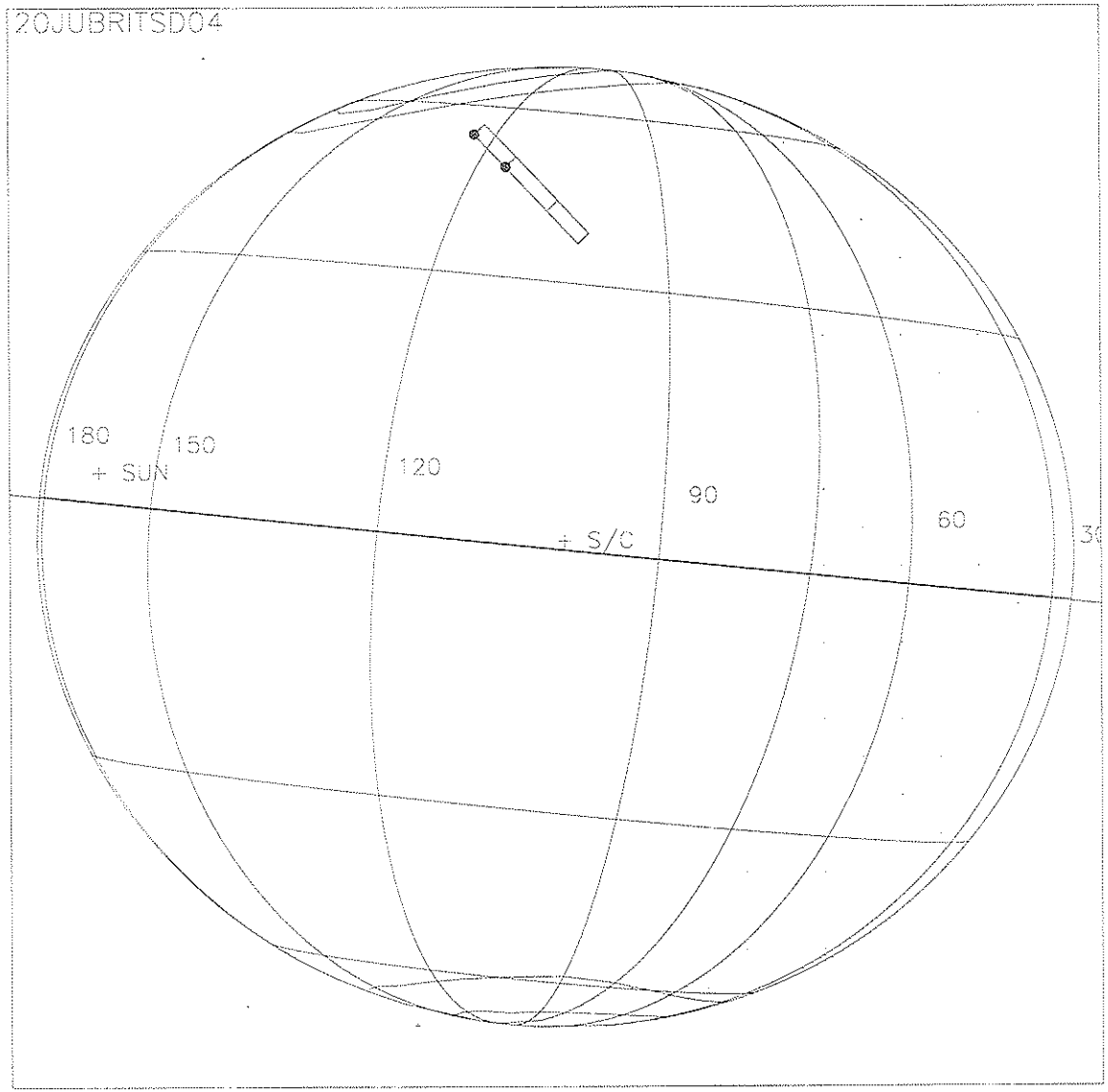

Start UTC_TIME : 1999-124 // 15:56:38.981
No End Time :
Start SCLK : 1/04980739:00:0:0

Target Body : JUPITER
Target Ra/Dec : 74.03/ 24.72 Deg
S/C to Body Center : 1194693. Km (16.710864 Rj)
Z-axis Pointing (Ra / Dec) : 198.35 / -3.06 Deg

Activity ID: Orbit 20 **OAPEL** JUNEBTRK **SeqNo** 03-

Title UVS AWG feature track **Instrument** UVS

Requestor UVS-AWG/W. KENT TOBISKA **Team** UVS **Working Group** AWG

Time System CDS **Load ID** 20A **Calendar Date** 05/04/99 **Week** 70

Start	JEE+CDS 00001438:00:0	99-124/17:14:35.466	JEE+001/00:13:58.666
End	JEE+CDS 00001442:00:0	99-124/17:18:38.133	JEE+001/00:18:01.333
Duration	00000004:00:0	000/00:04:02.667	000/00:04:02.667

Top Label 20JUNEBTRK03-

Bottom Label realtime

Plot Key UVS **Type** SCI

CDS Bytes 94 **Report Options** BOTH **Scan Platform** Yes

CDS Source OAP **Spin State** DUAL **DMS** Yes

Observation Objective

20JUNEBTRK03: AWG feature track with SSI to look at north equatorial belt.

Rj = 17.2
UVS configuration: full F/F scans.

MBTG = 0.017712

Design Detail

```
PSID   CDS   RIM   COMMAND  PARAMETERS
384AM  00   00:00  COMMNT  UVS RIM 0
157AM  38   00:00   CMDRS  PLAN_DUR = 4 RIHS; EST_UVS_CMDS = 2 (34UVS)
            01:00       1   UVF:07,SCAN,NORM,NORM,NORM,SAME,0,ON,OFF,OFF,ON,OFF,NOOVR,1,00,9C,00,00
            04:00       4   OFF:C1,FIXED,NORM,NORM,NORM,SAME,0,OFF,OFF,ON,OFF,OFF,NOOVR,1,2C,05,00,00
349JK  28   00:69  UVFLSH  DISCRD,UVS
165JJ  00  -01:00  TARGET  Lat/Lon = 10.38/187.6; use SSI target
349JL  28   03:69  UVFLSH  PACKET,UVS
```

Thu Apr 1 16:35:44 1999

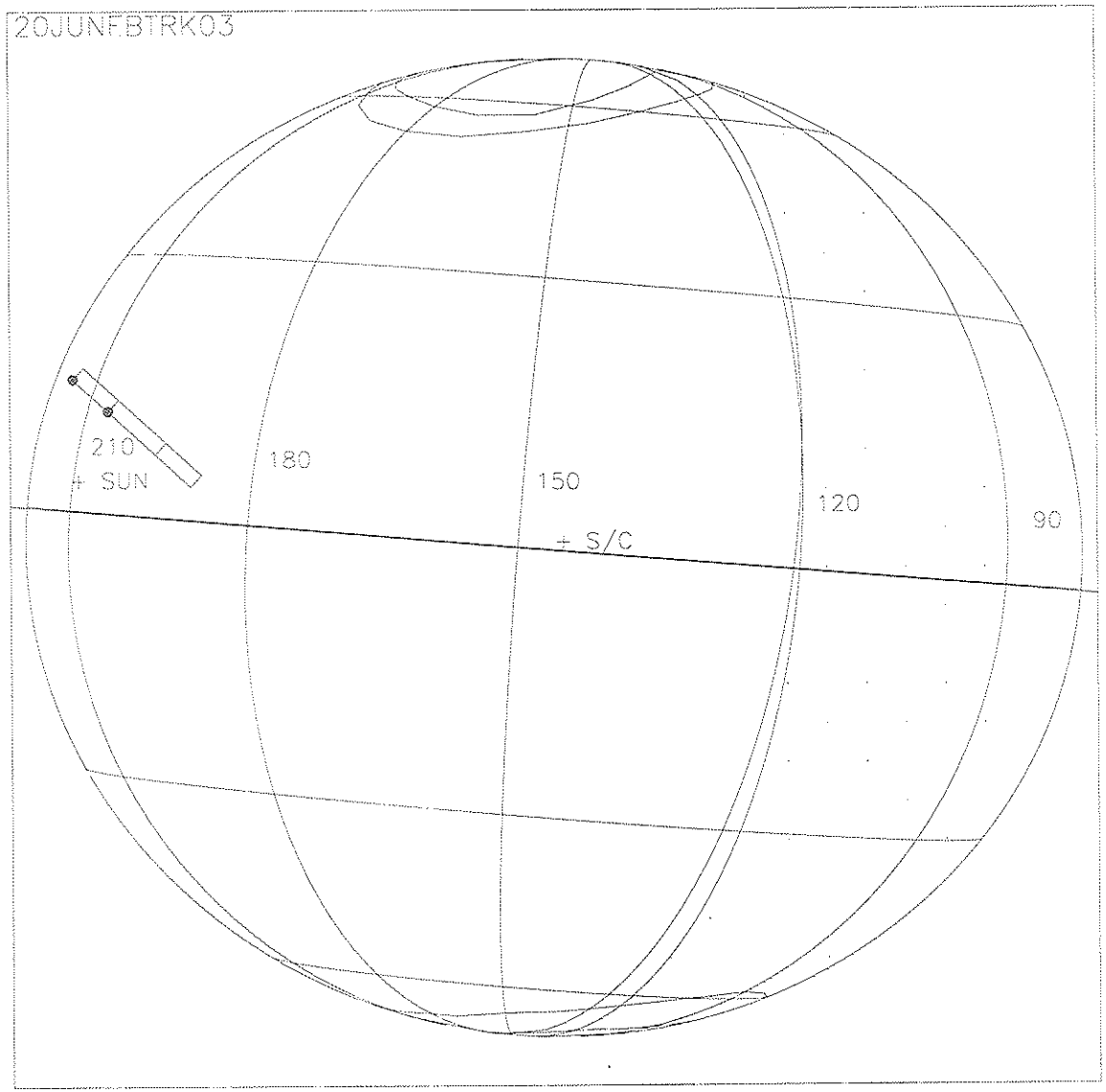

Start UTC_TIME : 1999-124 // 17:15:30.978
No End Time :
Start SCLK : 1/04980817:00:0:0

Target Body : JUPITER
Target Ra/Dec : 76.58/ 24.94 Deg
S/C to Body Center : 1236601. Km (17.297056 Rj)
Z-axis Pointing (Ra / Dec) : 198.35 / -3.06 Deg

Activity ID: Orbit 20 **OAPEL** JUBRITSD **SeqNo** 06-

Title Brightside hydrocarbons **Instrument** UVS

Requestor UVS-AWG/W. KENT TOBISKA **Team** UVS **Working Group** AWG

Time System CDS **Load ID** 20A **Calendar Date** 05/04/99 **Week** 70

Start	JEE+CDS 00001442:00:0	99-124/17:18:38.133	JEE+001/00:18:01.333
End	JEE+CDS 00001476:00:0	99-124/17:53:00.800	JEE+001/00:52:24.000
Duration	00000034:00:0	000/00:34:22.667	000/00:34:22.667

Top Label 20JUBRITSD06-

Bottom Label realtime

Plot Key UVS **Type** SCI

CDS Bytes 277 **Report Options** BOTH **Scan Platform** Yes

CDS Source OAP **Spin State** DUAL **DMS** No

Observation Objective

Observe brightside hydrocarbon emissions to develop a statistically significant acetylene and ammonia spectrum at four latitudes. This study will help understand minor species chemistry related to dynamics in Jupiter's stratosphere/upper troposphere. Low photon count rates require substantial integration time. This is a realtime observation for 6.13 hours during the feature track window using either a G/G 176 step miniscan covering 1496-1755 Å or a G/G full scan at a distance from Jupiter = 17.4 Rj. 4 observation latitudes are north high and mid lat, south mid and high lat. The lighting and view geometry is designed so that 1/mu + 1/mu_0 = 3.88.

MBTG = 0.017712; 27 RIMs integration time
north mid latitude; 176-step mini-scan G/G
GEM Objective Phase 2 - Jupiter atm. dynamics

Design Detail

```
PSID  CDS  RIM   COMMAND PARAMETERS
384AN 00   00:00 COMMNT UVS RIM 0
157AN 94   00:00  CMDRS PLAN_DUR = 34 RIMS; EST_UVS_CMDS = 6 (34UVS)
           01:00      1  UVG:E3,FIXED,NORM,NORM,NORM,SAME,0,OFF,OFF,ON,ON,OFF,NOOVR,1,1A,8E,00,00
           13:00     13  OFF:C1,FIXED,NORM,NORM,NORM,SAME,0,OFF,OFF,ON,OFF,OFF,NOOVR,1,2C,05,00,00
           16:00     16  UVG:E3,FIXED,NORM,NORM,NORM,SAME,0,OFF,OFF,ON,ON,OFF,NOOVR,1,1A,8E,00,00
           18:00     18  OFF:C1,FIXED,NORM,NORM,NORM,SAME,0,OFF,OFF,ON,OFF,OFF,NOOVR,1,2C,05,00,00
           21:00     21  UVG:E3,FIXED,NORM,NORM,NORM,SAME,0,OFF,OFF,ON,ON,OFF,NOOVR,1,1A,8E,00,00
           34:00     34  OFF:C1,FIXED,NORM,NORM,NORM,SAME,0,OFF,OFF,ON,OFF,OFF,NOOVR,1,2C,05,00,00
349JL 00  -00:69 UVFLSH (previous observation zeros buffer)
165CH 27   01:00 TARGET Lat/Lon = 18.5/144.3 (RA/Dec = 76.34/25.89) [3.8768]
117CH 37   02:00 CSMOS   #_strip=2; obs_slw_rt=0.02; repo_dur=0:46; strip_dur=3:45; cn_del_s=-2.0
165CI 27   16:00 TARGET Lat/Lon = 18.5/153.5 (RA/Dec = 76.84/25.92) [3.8722]
165CJ 27   21:00 TARGET Lat/Lon = 18.5/156.5 (RA/Dec = 77.00/25.93) [3.8785]
117CJ 37   21:00 CSMOS   #_strip=3; obs_slw_rt=0.02; repo_dur=0:46; strip_dur=3:45; cn_del_s=-2.0
                 (BS=45)
349KL 28   33:69 UVFLSH PACKET,UVS
```

Thu Apr 1 16:37:06 1999

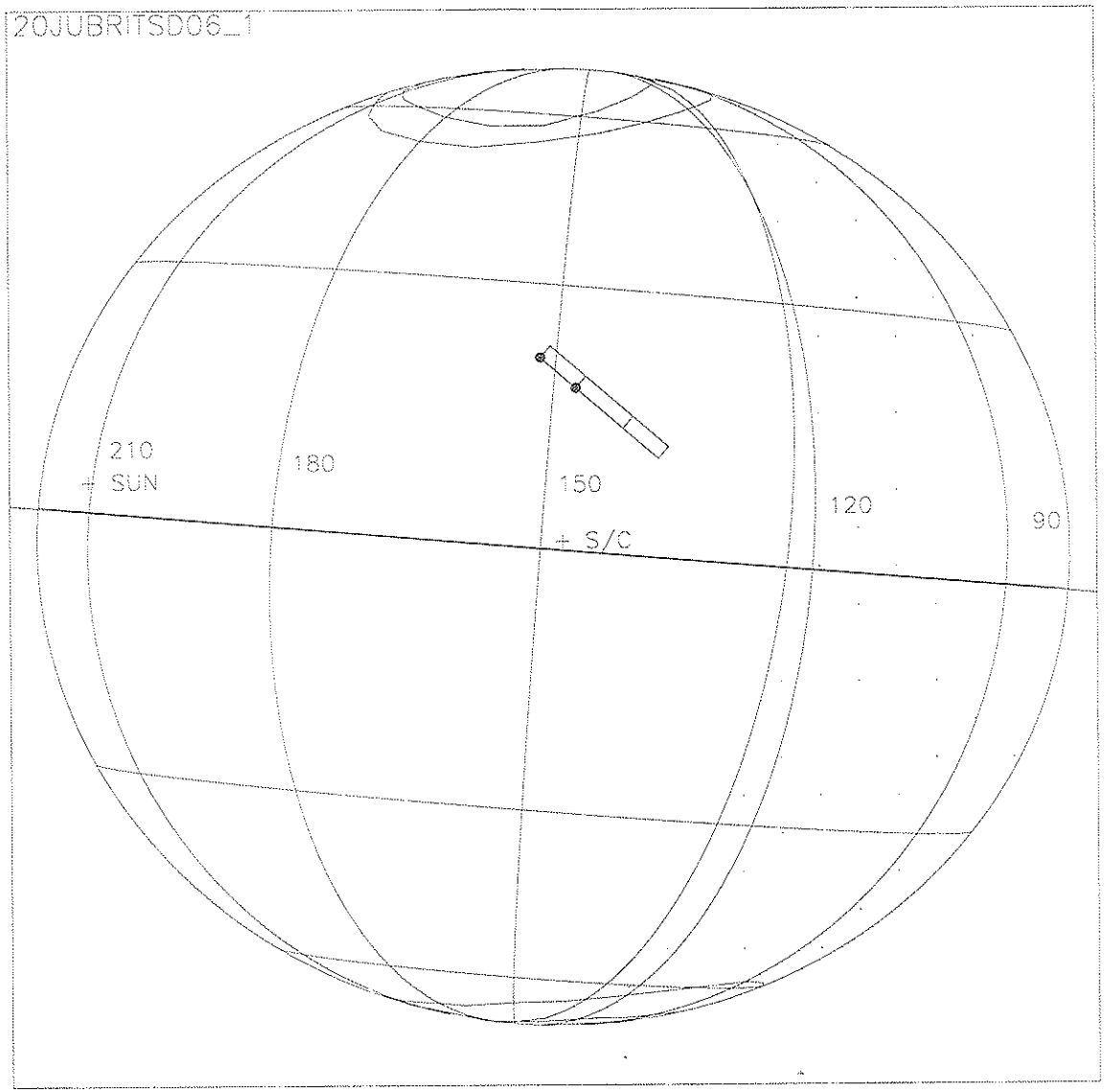

Start UTC_TIME : 1999-124 // 17:19:33.645
No End Time :
Start SCLK : 1/04980821:00:0:0

Target Body : JUPITER
Target Ra/Dec : 76.70/ 24.95 Deg
S/C to Body Center : 1238752. Km (17.527140 RJ)
Z-axis Pointing (Ra / Dec) : 198.35 / -3.06 Deg

Thu Apr 1 16:38:14 1999

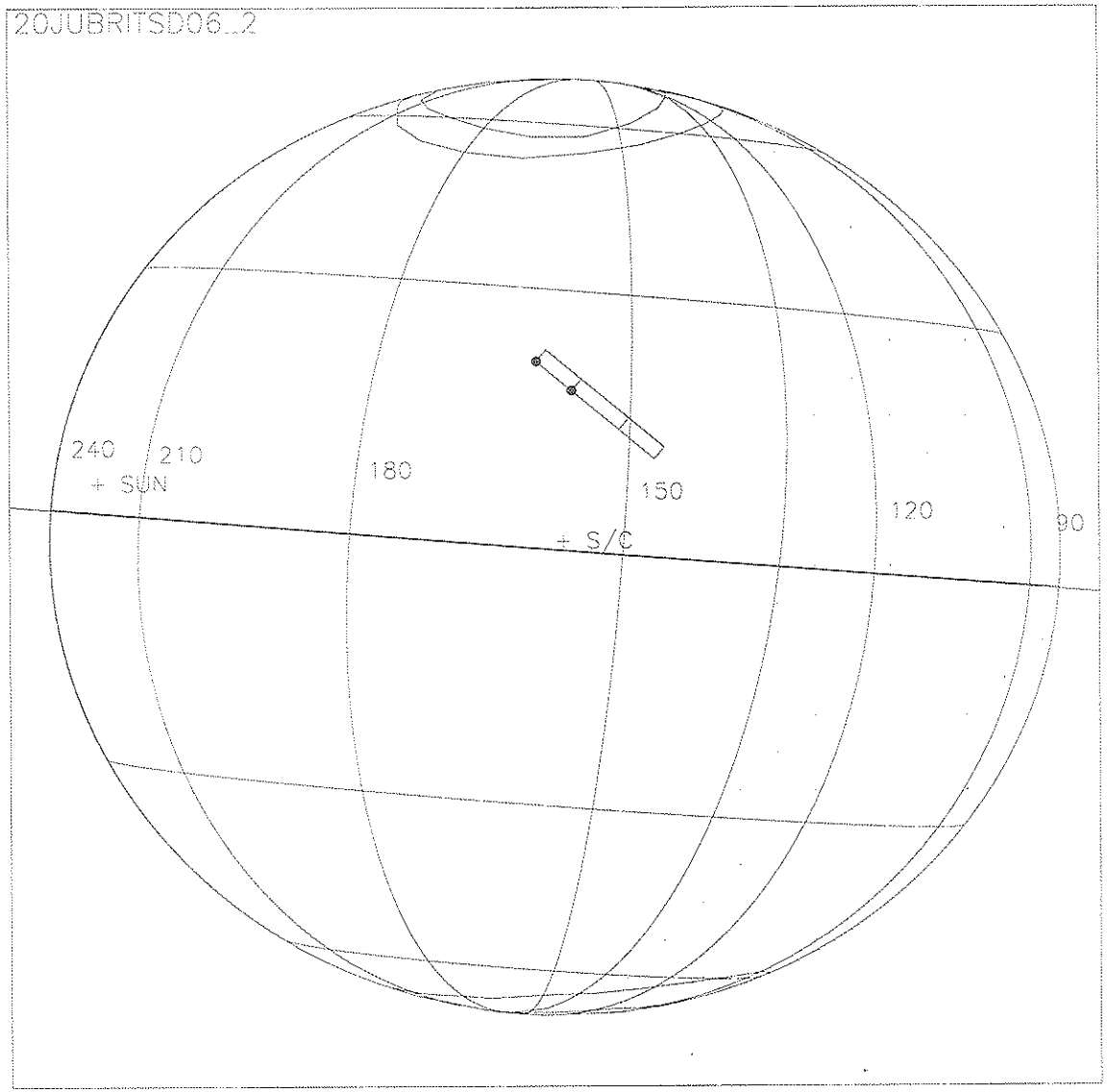

Start UTC_TIME : 1999-124 // 17:34:43.644
No End Time :
Start SCLK : 1/04980836:00:0:0

Target Body : JUPITER
Target Ra/Dec : 77.17/ 24.98 Deg
S/C to Body Center : 1246818. Km (17.439969 Rj)
Z-axis Pointing (Ra / Dec) : 198.35 / -3.06 Deg

Thu Apr 1 16:39:29 1999

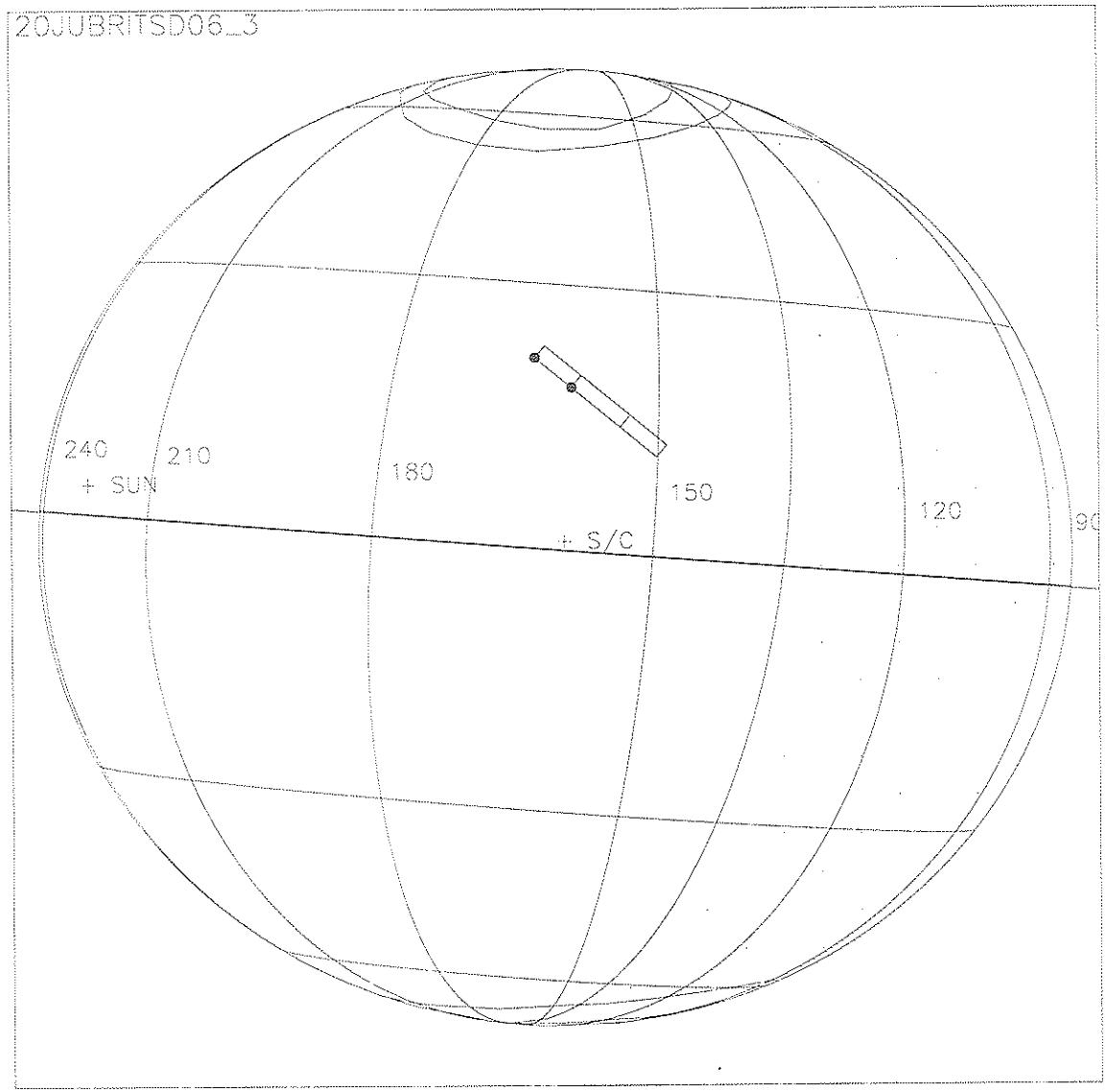

Start UTC_TIME : 1999-124 // 17:39:46.977
No End Time :
Start SCLK : 1/0498084 1:00:0:0

Target Body : JUPITER
Target Ra/Dec : 77.33/ 24.99 Deg
S/C to Body Center : 1249507. Km (17.477581 RJ)
Z-axis Pointing (Ra / Dec) : 198.55 / -3.06 Deg

Activity ID: Orbit 20 **OAPEL** JUNEBTRK **SeqNo** 13-

Title UVS AWG feature track **Instrument** UVS

Requestor UVS-AWG/W. KENT TOBISKA **Team** UVS **Working Group** AWG

Time System CDS **Load ID** 20A **Calendar Date** 05/04/99 **Week** 70

Start	JEE+CDS 00001486:00:0	99-124/18:03:07.466	JEE+001/01:02:30.666
End	JEE+CDS 00001490:00:0	99-124/18:07:10.133	JEE+001/01:06:33.333
Duration	00000004:00:0	000/00:04:02.667	000/00:04:02.667

Top Label 20JUNEBTRK13-

Bottom Label realtime

Plot Key UVS **Type** SCI

CDS Bytes 121 **Report Options** BOTH **Scan Platform** Yes

CDS Source OAP **Spin State** DUAL **DMS** Yes

Observation Objective

20JUNEBTRK13: AWG feature track with SSI to look at north equatorial belt.

Rj = 17.5
UVS configuration: full F/F scans.

MBTG = 0.017712

Design Detail

```
PSID  CDS  RIM   COMMAND PARAMETERS
384AD 00   00:00 COMMNT UVS RIM 0
157AD 38   00:00  CMDRS PLAN_DUR = 4 RIMS; EST_UVS_CMDS = 2 (34UVS)
           01:00      1  UVF:07,SCAN,NORM,NORM,NORM,SAME,0,ON,OFF,OFF,ON,OFF,NOOVR,1,00,9C,00,00
           04:00      4  OFF:C1,FIXED,NORM,NORM,NORM,SAME,0,OFF,OFF,ON,OFF,OFF,NOOVR,1,2C,05,00,00
349JM 28   00:69 UVFLSH DISCRD,UVS
165CK 27   01:00 TARGET Lat/Lon = 10.40/189.08; (RA/Dec = 78.98/25.64)
349JN 28   03:69 UVFLSH PACKET,UVS
```

Thu Apr 1 16:41:05 1999

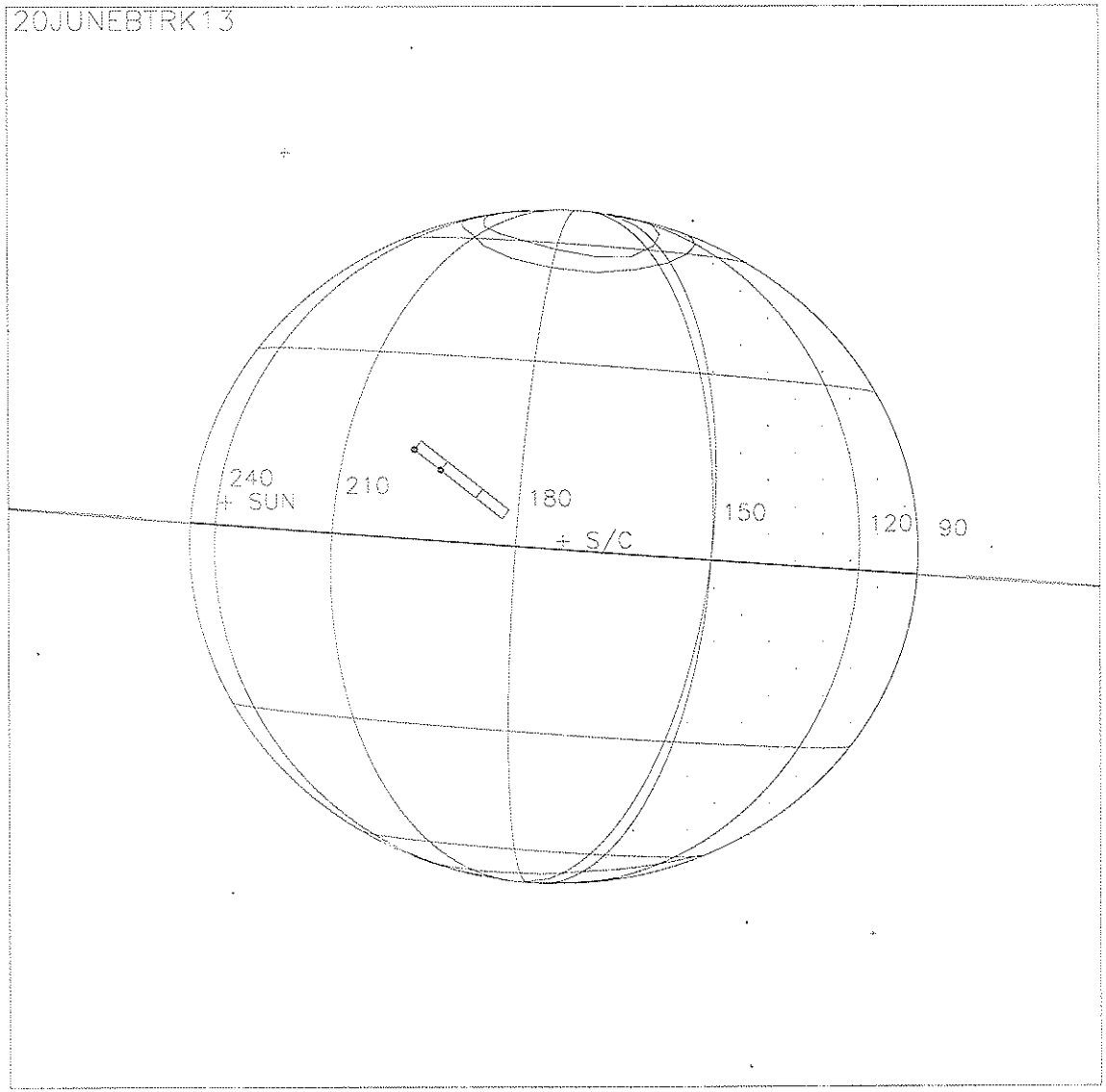

Start UTC_TIME : 1999-124 // 18:04:02.976
No End Time :
Start SCLK : 1/04980865:00:0:0

Target Body : JUPITER
Target Ra/Dec : 78.06/ 25.04 Deg
S/C to Body Center : 1262415. Km (17.658133 Rj)
Z-axis Pointing (Ra / Dec) : 198.35 / -3.06 Deg

Activity ID: Orbit 20 **OAPEL** JUBRITSD **SeqNo** 07-

Title Brightside hydrocarbons **Instrument** UVS

Requestor UVS-AWG/W. KENT TOBISKA **Team** UVS **Working Group** AWG

Time System CDS **Load ID** 20A **Calendar Date** 05/04/99 **Week** 70

Start	JEE+CDS 00001490:00:0	99-124/18:07:10.133	JEE+001/01:06:33.333
End	JEE+CDS 00001524:00:0	99-124/18:41:32.800	JEE+001/01:40:56.000
Duration	00000034:00:0	000/00:34:22.667	000/00:34:22.667

Top Label 20JUBRITSD07-

Bottom Label realtime

Plot Key UVS **Type** SCI

CDS Bytes 277 **Report Options** BOTH **Scan Platform** Yes

CDS Source OAP **Spin State** DUAL **DMS** No

Observation Objective

Observe brightside hydrocarbon emissions to develop a statistically significant acetylene and ammonia spectrum at four latitudes. This study will help understand minor species chemistry related to dynamics in Jupiter's stratosphere/upper troposphere. Low photon count rates require substantial integration time. This is a realtime observation for 6.13 hours during the feature track window using either a G/G 176 step miniscan covering 1496-1755 Å or a G/G full scan at a distance from Jupiter = 17.6 Rj. 4 observation latitudes are north high and mid lat, south mid and high lat. The lighting and view geometry is designed so that 1/mu + 1/mu_0 = 3.88.

MBTG = 0.017712; 26 RIMs integration time
north mid latitude; full-scan G/G
GEM Objective Phase 2 - Jupiter atm. dynamics

Design Detail

```
PSID  CDS  RIM   COMMAND PARAMETERS
384AP 00   00:00 COMMNT UVS RIM 0
157AP 94   00:00  CMDRS PLAN_DUR = 34 RIMS; EST_UVS_CMDS = 6 (34UVS)
           01:00      1  UVG:07,SCAN,NORM,NORM,NORM,SAME,0,OFF,OFF,ON,ON,OFF,NOOVR,1,2C,9D,00,00
           07:00      7  OFF:C1,FIXED,NORM,NORM,NORM,SAME,0,OFF,OFF,ON,OFF,OFF,NOOVR,1,2C,05,00,00
           08:00      8  UVG:07,SCAN,NORM,NORM,NORM,SAME,0,OFF,OFF,ON,ON,OFF,NOOVR,1,2C,9D,00,00
           10:00     10  OFF:C1,FIXED,NORM,NORM,NORM,SAME,0,OFF,OFF,ON,OFF,OFF,NOOVR,1,2C,05,00,00
           16:00     16  UVG:07,SCAN,NORM,NORM,NORM,SAME,0,OFF,OFF,ON,ON,OFF,NOOVR,1,2C,9D,00,00
           34:00     34  OFF:C1,FIXED,NORM,NORM,NORM,SAME,0,OFF,OFF,ON,OFF,OFF,NOOVR,1,2C,05,00,00
349JN 00 -00:69 UVFLSH (previous observation zeros buffer)
165CL 27   01:00 TARGET Lat/Lon = 18.5/173.6 (RA/Dec = 77.92/25.98) [3.8800]
117CL 37   02:00 CSMOS  #_strip=1; obs_slw_rt=0.02; repo_dur=0:46; strip_dur=3:45; cn_del_s=-1.9
165CM 27   08:00 TARGET Lat/Lon = 18.5/177.8 (RA/Dec = 78.14/25.99) [3.8890]
165CN 27   16:00 TARGET Lat/Lon = 18.5/182.8 (RA/Dec = 78.40/26.01) [3.8756]
117CN 37   17:00 CSMOS  #_strip=4; obs_slw_rt=0.02; repo_dur=0:46; strip_dur=3:45; cn_del_s=-1.9
349KN 28   33:69 UVFLSH PACKET,UVS
```

Thu Apr 1 16:42:40 1999

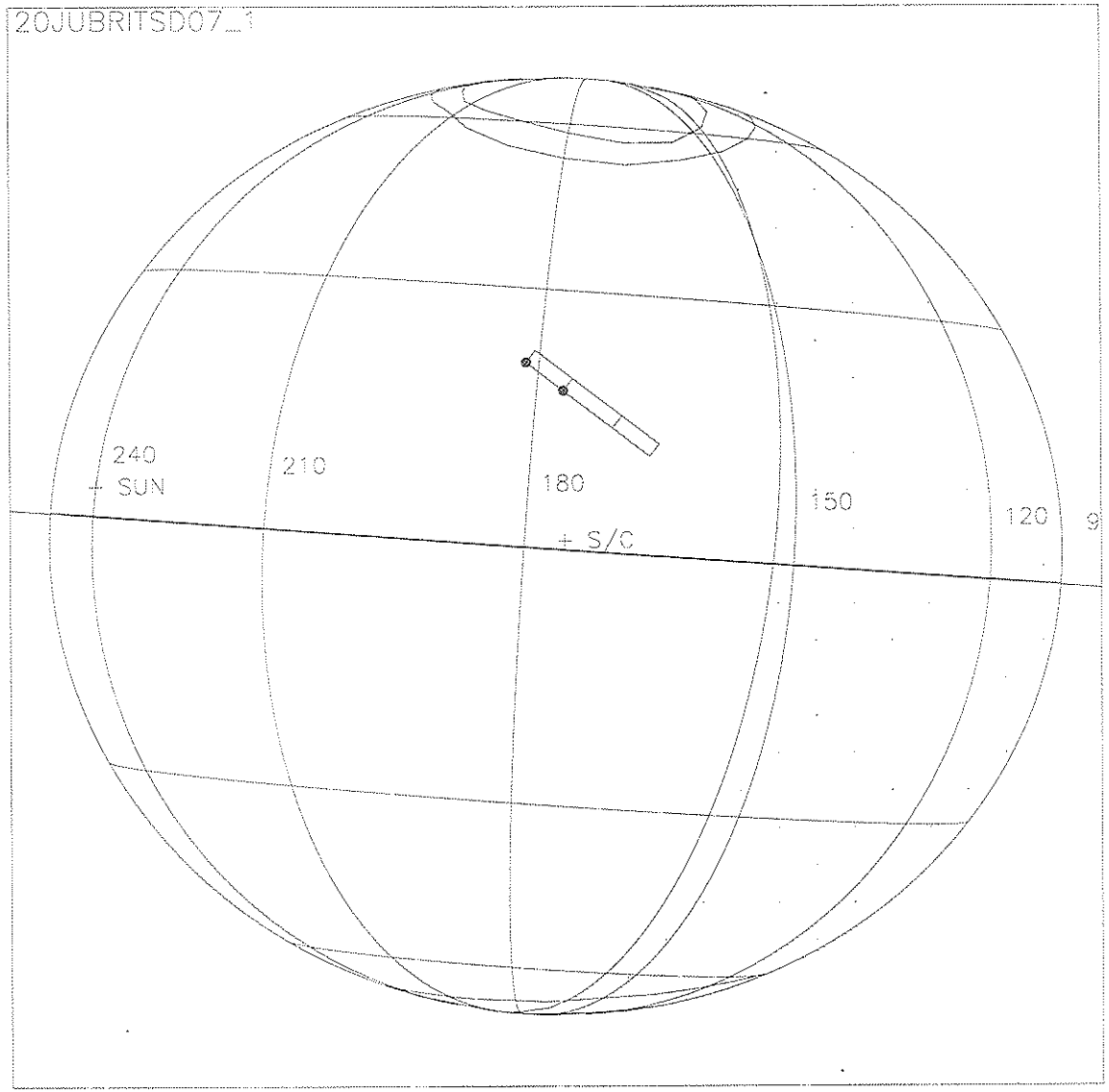

Start UTC_TIME : 1999-124 // 18:08:05.643
No End Time :
Start SCLK : 1/04980869:00:0:0

Target Body : JUPITER
Target Ra/Dec : 78.19/ 25.05 Deg
S/C to Body Center : 1264567. Km (17.688226 Rj)
Z-axis Pointing (Ra / Dec) : 198.35 / -3.06 Deg

Thu Apr 1 16:43:46 1999

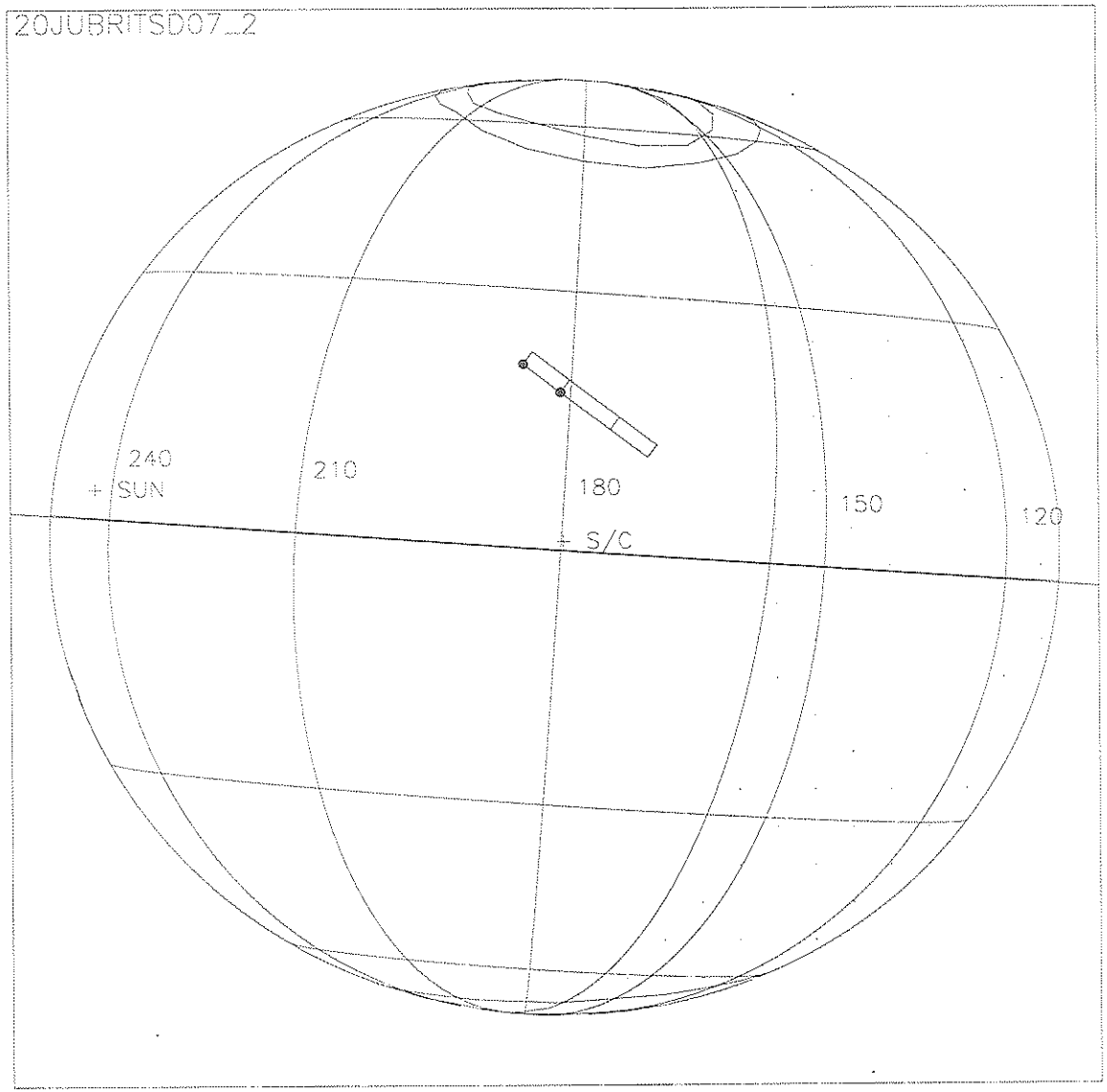

Start UTC_TIME : 1999-124 // 18:15:10.309
No End Time :
Start SCLK : 1/04980876:00:0:0

Target Body : JUPITER
Target Ra/Dec : 78.40/ 25.06 Deg
S/C to Body Center : 1268332. Km (17.740888 Rj)
Z-axis Pointing (Ra / Dec) : 198.35 / -3.06 Deg

Thu Apr 1 16:45:21 1999

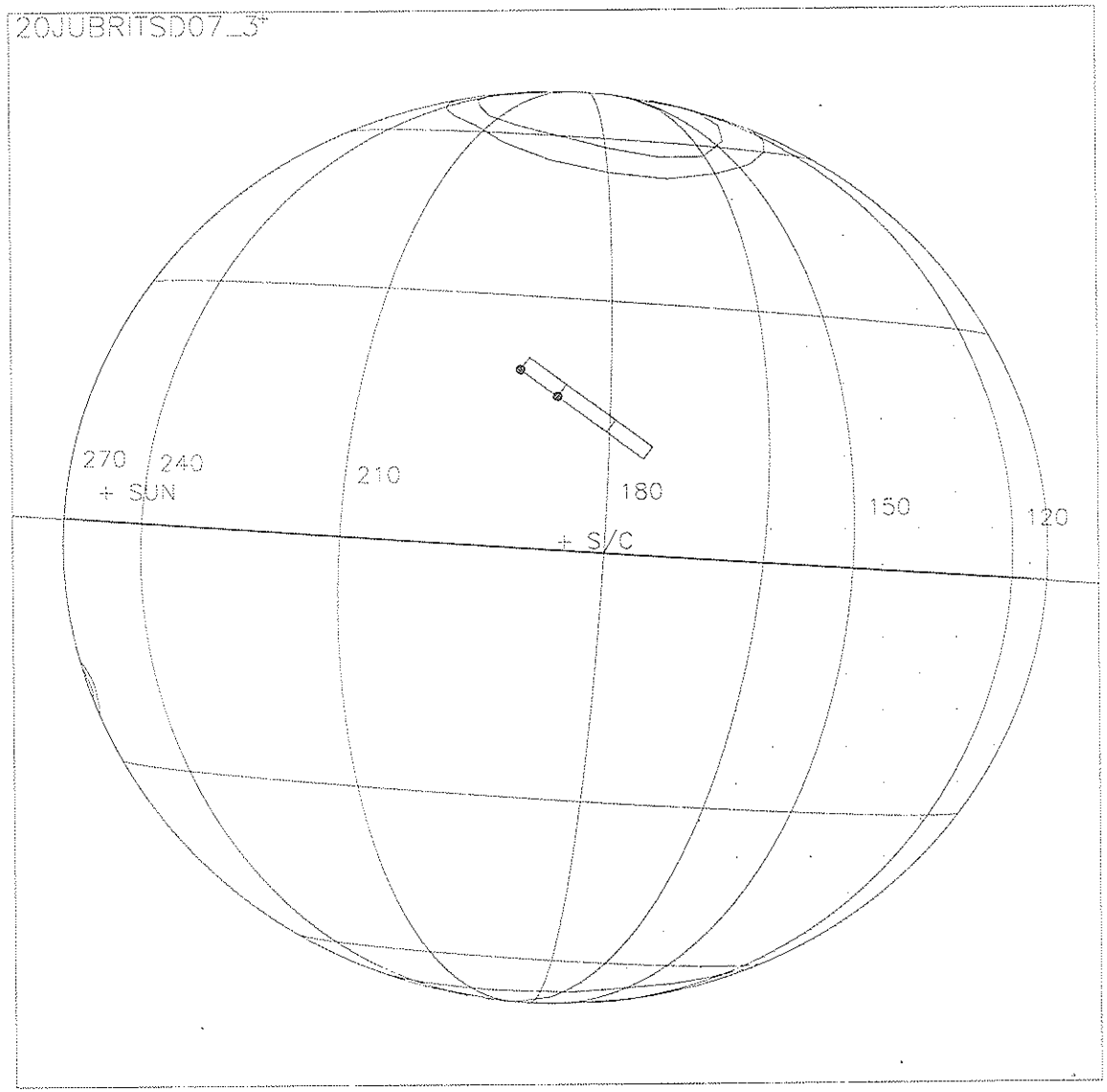

Start UTC_TIME : 1999-124 // 18:23:15.642
No End Time :
Start SCLK : 1/04980884:00:0:0

Target Body : JUPITER
Target Ra/Dec : 78.64/ 25.08 Deg
S/C to Body Center : 1272634. Km (17.801073 Rj)
Z-axis Pointing (Ra / Dec) : 198.35 / -3.06 Deg

Activity ID:	Orbit 20	OAPEL	JUNEBTRK	SeqNo	23-
Title	UVS AWG feature track			Instrument	UVS
Requestor	UVS-AWG/W. KENT TOBISKA	Team	UVS	Working Group	AWG

Time System	CDS	Load ID	20A	Calendar Date	05/04/99	Week	70

Start	JEE+CDS 00001529:00:0	99-124/18:46:36.133	JEE+001/01:45:59.333
End	JEE+CDS 00001533:00:0	99-124/18:50:38.800	JEE+001/01:50:02.000
Duration	00000004:00:0	000/00:04:02.667	000/00:04:02.667

Top Label	20JUNEBTRK23-				
Bottom Label	realtime				
Plot Key	UVS	Type	SCI		
CDS Bytes	121	Report Options	BOTH	Scan Platform	Yes
CDS Source	OAP	Spin State	DUAL	DMS	Yes

Observation Objective

20JUNEBTRK23: AWG feature track with SSI to look at north equatorial belt.

Rj = 17.9
UVS configuration: full F/F scans.

MBTG = 0.017712

Design Detail

```
PSID  CDS  RIM   COMMAND PARAMETERS
384AQ 00   00:00 COMMNT UVS RIM 0
157AQ 38   00:00  CMDRS PLAN_DUR = 4 RTHS; EST_UVS_CMDS = 2 (34UVS)
           01:00      1  UVF:07,SCAN,NORM,NORM,NORM,SAME,0,ON,OFF,OFF,ON,OFF,NOOVR,1,00,9C,00,00
           04:00      4  OFF:C1,FIXED,NORM,NORM,NORM,SAME,0,OFF,OFF,ON,OFF,OFF,NOOVR,1,2C,05,00,00
349JO 28   00:69 UVFLSH DISCRD,UVS
165CO 27   01:00 TARGET Lat/Lon = 10.41/189.29; (RA/Dec = 78.67/25.60)
349JP 28   03:69 UVFLSH PACKET,UVS
```

Thu Apr 1 16:47:02 1999

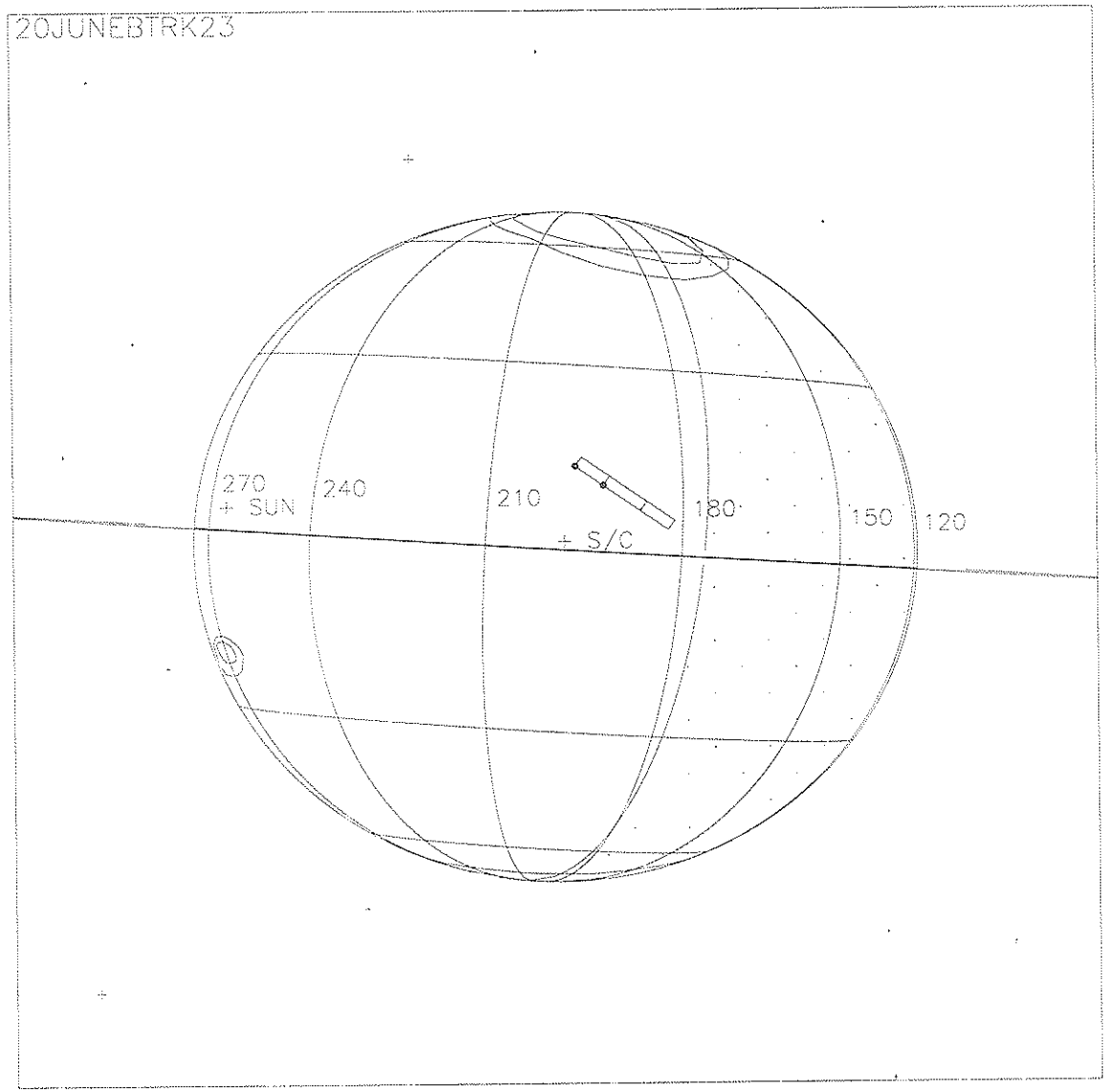

Start UTC_TIME : 1999-124 // 18:47:31.641
No End Time :
Start SCLK : 1/04980908:00:0:0

Target Body : JUPITER
Target Ra/Dec : 79.35/ 25.12 Deg
S/C to Body Center : 1285541. Km (17.981611 Rj)
Z-axis Pointing (Ra / Dec) : 198.35 / -3.06 Deg

Activity ID: Orbit 20 **OAPEL** JUBRITSD **SeqNo** 08-

Title Brightside hydrocarbons **Instrument** UVS

Requestor UVS-AWG/W. KENT TOBISKA **Team** UVS **Working Group** AWG

Time System CDS **Load ID** 20A **Calendar Date** 05/04/99 **Week** 70

Start	JEE+CDS 00001533:00:0	99-124/18:50:38.800	JEE+001/01:50:02.000
End	JEE+CDS 00001567:00:0	99-124/19:25:01.466	JEE+001/02:24:24.666
Duration	00000034:00:0	000/00:34:22.666	000/00:34:22.666

Top Label 20JUBRITSD08-

Bottom Label realtime

Plot Key UVS **Type** SCI

CDS Bytes 332 **Report Options** BOTH **Scan Platform** Yes

CDS Source OAP **Spin State** DUAL **DMS** No

Observation Objective

Observe brightside hydrocarbon emissions to develop a statistically significant acetylene and ammonia spectrum at four latitudes. This study will help understand minor species chemistry related to dynamics in Jupiter's stratosphere/upper troposphere. Low photon count rates require substantial integration time. This is a realtime observation for 6.13 hours during the feature track window using either a G/G 176 step miniscan covering 1496-1755 Å or a G/G full scan at a distance from Jupiter = 18.1 Rj. 4 observation latitudes are north high and mid lat, south mid and high lat. The lighting and view geometry is designed so that 1/mu + 1/mu_0 = 3.88.

MBTG = 0.017712; 26 RIMs integration time
south mid latitude; 176-step mini-scan G/G
GEM Objective Phase 2 - Jupiter atm. dynamics

Design Detail

```
PSIP   CDS   RIM   COMMAND PARAMETERS
384AR 00   00:00 COMMNT UVS RIM 0
157AR 122  00:00  CMDRS PLAN_DUR = 34 RIMS; EST_UVS_CMDS = 8 (34UVS)
           01:00      1  UVG:E3,FIXED,NORM,NORM,NORM,SAME,0,OFF,OFF,ON,ON,OFF,NOOVR,1,1A,8E,00,00
           10:00     10  OFF:C1,FIXED,NORM,NORM,NORM,SAME,0,OFF,OFF,ON,OFF,OFF,NOOVR,1,2C,05,00,00
           13:00     13  UVG:E3,FIXED,NORM,NORM,NORM,SAME,0,OFF,OFF,ON,ON,OFF,NOOVR,1,1A,8E,00,00
           15:00     15  OFF:C1,FIXED,NORM,NORM,NORM,SAME,0,OFF,OFF,ON,OFF,OFF,NOOVR,1,2C,05,00,00
           17:00     17  UVG:E3,FIXED,NORM,NORM,NORM,SAME,0,OFF,OFF,ON,ON,OFF,NOOVR,1,1A,8E,00,00
           23:00     23  OFF:C1,FIXED,NORM,NORM,NORM,SAME,0,OFF,OFF,ON,OFF,OFF,NOOVR,1,2C,05,00,00
           25:00     25  UVG:E3,FIXED,NORM,NORM,NORM,SAME,0,OFF,OFF,ON,ON,OFF,NOOVR,1,1A,8E,00,00
           34:00     34  OFF:C1,FIXED,NORM,NORM,NORM,SAME,0,OFF,OFF,ON,OFF,OFF,NOOVR,1,2C,05,00,00
349JP 00  -00:69 UVFLSH (previous observation zeros buffer)
165CP 27   01:00 TARGET Lat/Lon = -19.5/202.1 (RA/Dec = 79.56/24.13) [3.8704]
117CP 37   01:00 CSMOS   #_strip=2; obs_slw_rt=0.02; repo_dur=0:46; strip_dur=3:45; cn_del_s=-1.7
                 (BS=45)
165CQ 27   13:00 TARGET Lat/Lon = -19.5/209.3 (RA/Dec = 79.91/24.16) [3.8872]
165CR 27   17:00 TARGET Lat/Lon = -19.5/211.8 (RA/Dec = 80.04/24.17) [3.8807]
165CS 27   25:00 TARGET Lat/Lon = -19.5/216.7 (RA/Dec = 80.28/24.18) [3.8794]
117CS 37   25:00 CSMOS   #_strip=2; obs_slw_rt=0.02; repo_dur=0:46; strip_dur=3:45; cn_del_s=-1.7
                 (BS=45)
349KP 28   33:69 UVFLSH PACKET,UVS
```

Thu Apr 1 16:48:44 1999

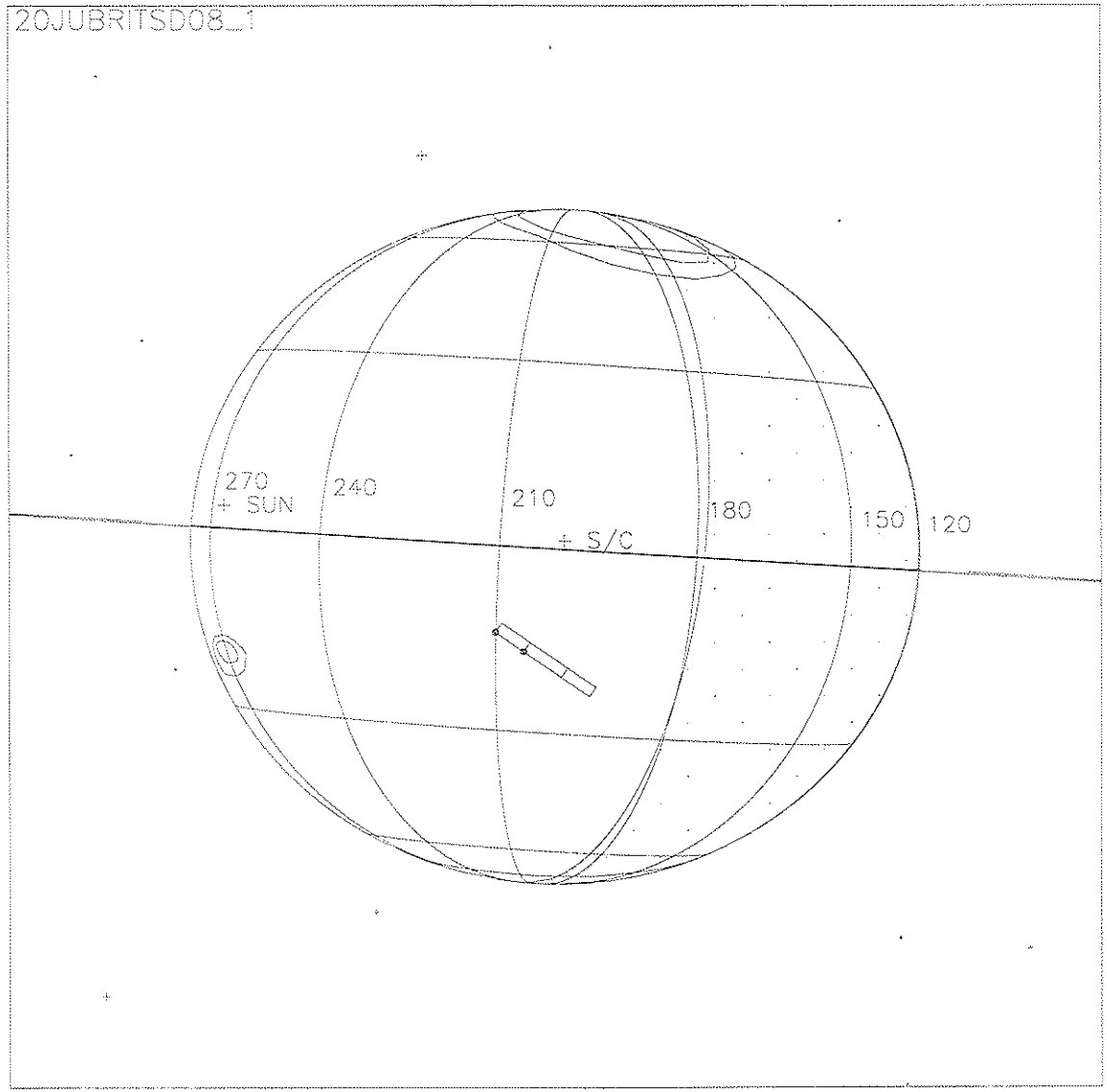

Start UTC_TIME : 1999-124 // 18:51:34.308
No End Time :
Start SCLK : 1/0498091 2:00:0:0

Target Body : JUPITER
Target Ra/Dec : 79.47/ 25.13 Deg
S/C to Body Center : 1287692. Km (18.011698 RJ)
Z-axis Pointing (Ra / Dec) : 198.35 / -3.06 Deg

Thu Apr 1 17:10:13 1999

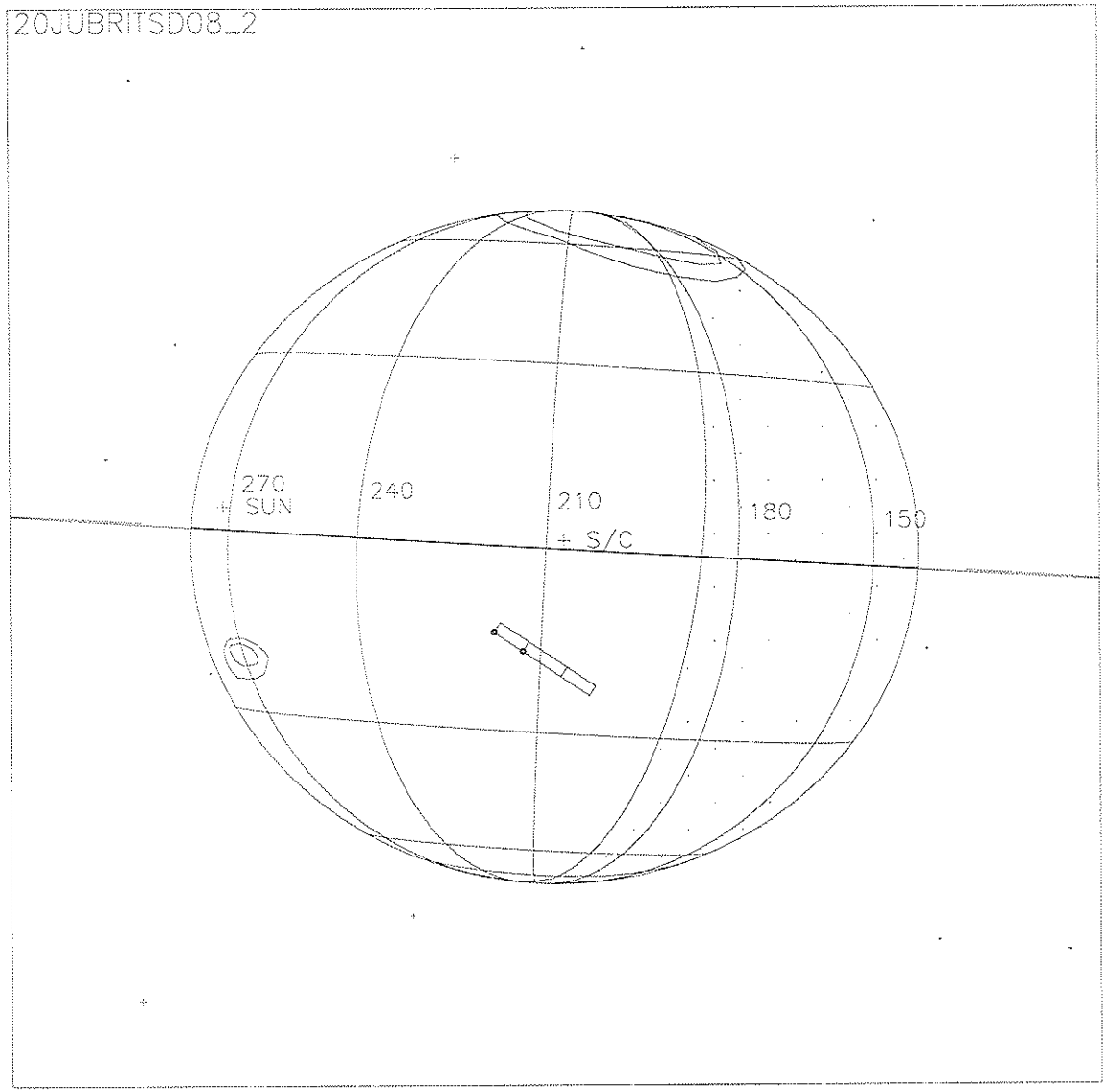

Start UTC_TIME : 1999-124 // 19:03:42.308
No End Time :
Start SCLK : 1/04980924:00:0:0

Target Body : JUPITER
Target Ra/Dec : 79.81/ 25.14 Deg
S/C to Body Center : 1294145. Km (18.101950 Rj)
Z-axis Pointing (Ra / Dec) : 198.35 / -3.06 Deg

Thu Apr 1 19:28:52 1999

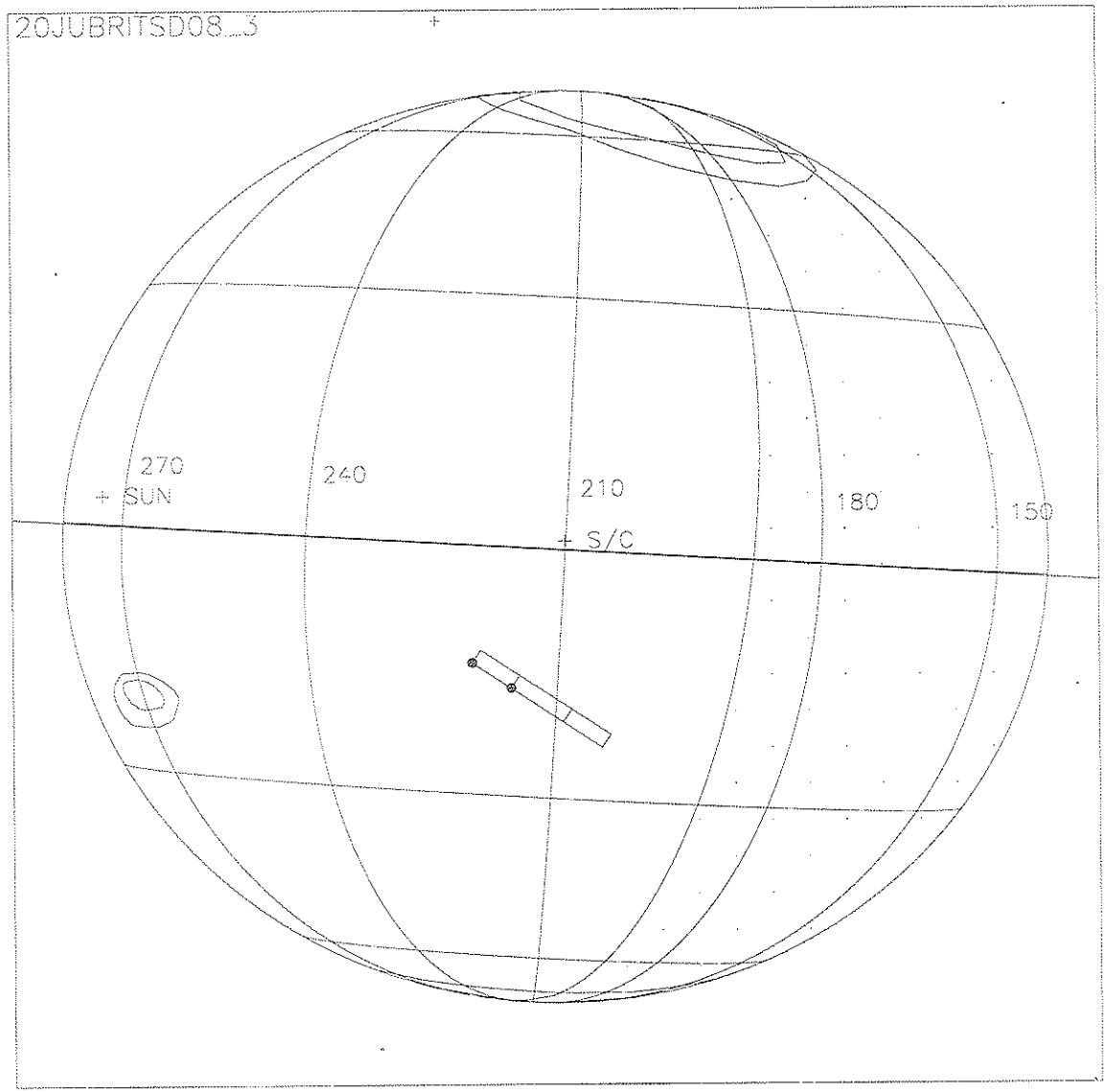

Start UTC_TIME : 1999-124 // 19:07:44.974
No End Time :
Start SCLK : 1/04980928:00:0:0

Target Body : JUPITER
Target Ra/Dec : 79.93/ 25.15 Deg
S/C to Body Center : 1296295. Km (18.132031 Rj)
Z-axis Pointing (Ra / Dec) : 198.35 / -3.06 Deg

Thu Apr 1 19:30:07 1999

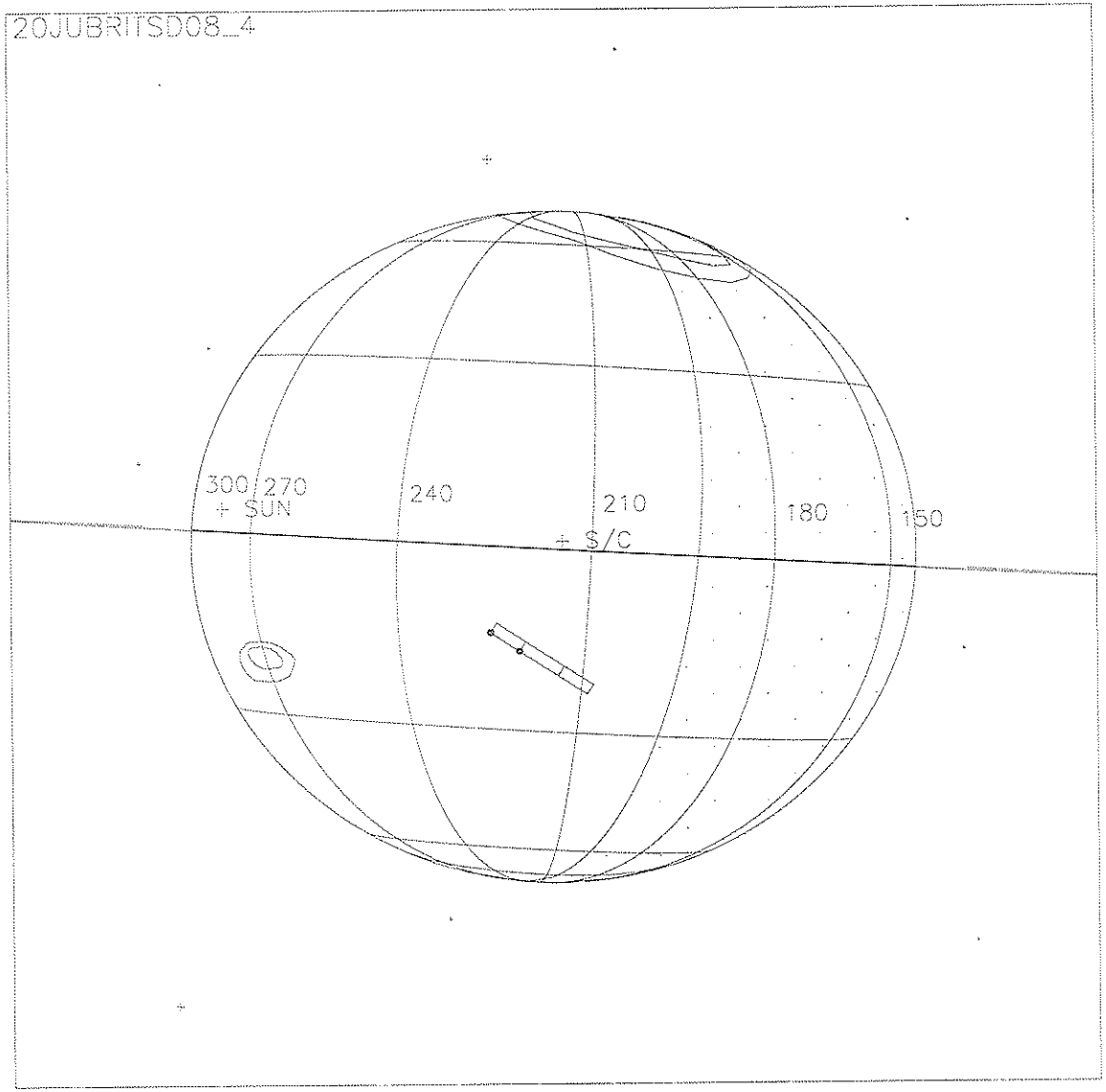

Start UTC TIME : 1999-124 // 19:15:50.307
No End Time :
Start SCLK : 1/04980936:00:0:0

Target Body : JUPITER
Target Ra/Dec : 80.16/ 25.16 Deg
S/C to Body Center : 1300596. Km (18.192189 Rj)
Z-axis Pointing (Ra / Dec) : 198.35 / -3.06 Deg

Activity ID: Orbit 20 **OAPEL** JUBRITSD **SeqNo** 09-

Title Brightside hydrocarbons **Instrument** UVS

Requestor UVS-AWG/W. KENT TOBISKA **Team** UVS **Working Group** AWG

Time System CDS **Load ID** 20A **Calendar Date** 05/04/99 **Week** 70

Start	JEE+CDS 00001573:00:0	99-124/19:31:05.466	JEE+001/02:30:28.666
End	JEE+CDS 00001601:00:0	99-124/19:59:24.133	JEE+001/02:58:47.333
Duration	00000028:00:0	000/00:28:18.667	000/00:28:18.667

Top Label 20JUBRITSD09-

Bottom Label realtime

Plot Key UVS **Type** SCI

CDS Bytes 360 **Report Options** BOTH **Scan Platform** Yes

CDS Source OAP **Spin State** DUAL **DMS** No

Observation Objective

Observe brightside hydrocarbon emissions to develop a statistically significant acetylene and ammonia spectrum at four latitudes. This study will help understand minor species chemistry related to dynamics in Jupiter's stratosphere/upper troposphere. Low photon count rates require substantial integration time. This is a realtime observation for 6.13 hours during the feature track window using either a G/G 176 step miniscan covering 1496-1755 Å or a G/G full scan at a distance from Jupiter = 18.3 Rj. 4 observation latitudes are north high and mid lat, south mid and high lat. The lighting and view geometry is designed so that 1/mu + 1/mu_0 = 3.88.

MBTG = 0.017712; 21 RIMs integration time
south mid latitude; 176-step mini-scan G/G
GEM Objective Phase 2 - Jupiter atm. dynamics

Design Detail

```
PSID   CDS   RIM   COMMAND PARAMETERS
384AS  00    00:00 COMMNT UVS RIM 0
157AS  122   00:00  CMDRS PLAN_DUR = 28 RIMS; EST_UVS_CMDS = 8 (34UVS)
             01:00      1  UVG:E3,FIXED,NORM,NORM,NORM,SAME,0,OFF,OFF,ON,ON,OFF,NOOVR,1,1A,8E,00,00
             08:00      8  OFF:C1,FIXED,NORM,NORM,NORM,SAME,0,OFF,OFF,ON,OFF,OFF,NOOVR,1,2C,05,00,00
             10:00     10  UVG:E3,FIXED,NORM,NORM,NORM,SAME,0,OFF,OFF,ON,ON,OFF,NOOVR,1,1A,8E,00,00
             13:00     13  OFF:C1,FIXED,NORM,NORM,NORM,SAME,0,OFF,OFF,ON,OFF,OFF,NOOVR,1,2C,05,00,00
             14:00     14  UVG:E3,FIXED,NORM,NORM,NORM,SAME,0,OFF,OFF,ON,ON,OFF,NOOVR,1,1A,8E,00,00
             18:00     18  OFF:C1,FIXED,NORM,NORM,NORM,SAME,0,OFF,OFF,ON,OFF,OFF,NOOVR,1,2C,05,00,00
             21:00     21  UVG:E3,FIXED,NORM,NORM,NORM,SAME,0,OFF,OFF,ON,ON,OFF,NOOVR,1,1A,8E,00,00
             28:00     28  OFF:C1,FIXED,NORM,NORM,NORM,SAME,0,OFF,OFF,ON,OFF,OFF,NOOVR,1,2C,05,00,00
349KQ  28    00:69 UVFLSH DISCRD,UVS
165CT  27    01:00 TARGET Lat/Lon = -19.5/226.5 (RA/Dec = 80.76/24.21) [3.8770]
117CT  37    02:00 CSMOS  #_strip=1; obs_slw_rt=0.02; repo_dur=0:46; strip_dur=3:45; cn_del_s=-1.6
165CU  27    10:00 TARGET Lat/Lon = -19.5/231.9 (RA/Dec = 81.01/24.23) [3.8887]
165CV  27    14:00 TARGET Lat/Lon = -19.5/234.4 (RA/Dec = 81.14/24.24) [3.8823]
165CW  27    21:00 TARGET Lat/Lon = -19.5/238.7 (RA/Dec = 81.34/24.25) [3.8798]
117CW  37    23:00 CSMOS  #_strip=1; obs_slw_rt=0.02; repo_dur=0:46; strip_dur=3:45; cn_del_s=-1.6
349KR  28    27:69 UVFLSH PACKET,UVS
```

Thu Apr 1 19:31:43 1999

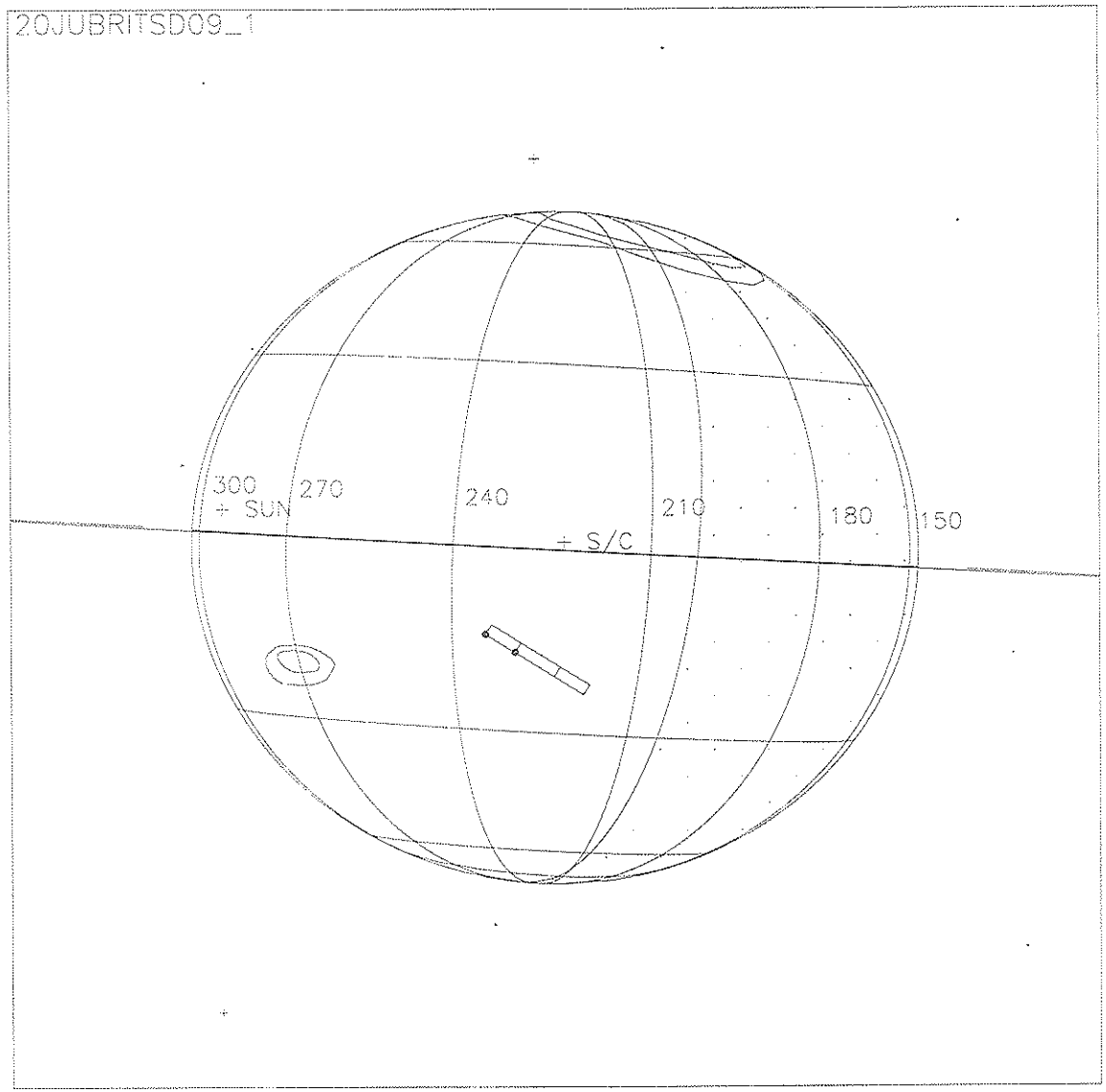

Start UTC_TIME : 1999-124 // 19:31:00.307
No End Time :
Start SCLK : 1/0498095 1:00:0:0

Target Body : JUPITER
Target Ra/Dec : 80.59/ 25.18 Deg
S/C to Body Center : 1308659. Km (18.304964 Rj)
Z-axis Pointing (Ra / Dec) : 198.35 / -3.06 Deg

Thu Apr 1 19:32:53 1999

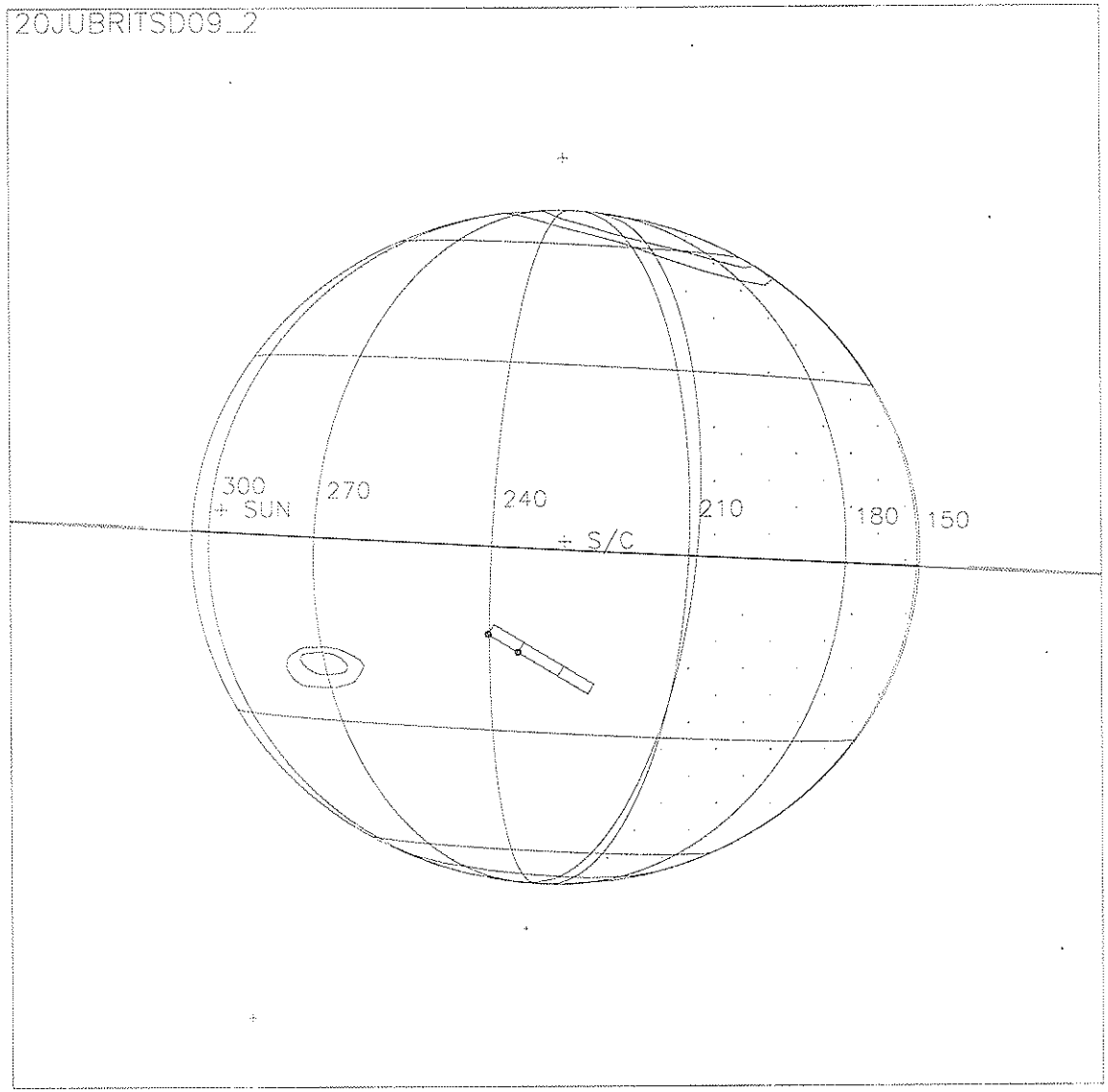

Start UTC_TIME : 1999-124 // 19:41:06.973
No End Time :
Start SCLK : 1/04980961:00:0:0

Target Body : JUPITER
Target Ra/Dec : 80.87/ 25.20 Deg
S/C to Body Center : 1314032. Km (18.380132 Rj)
Z-axis Pointing (Ra / Dec) : 198.35 / -3.06 Deg

Thu Apr 1 19:34:23 1999

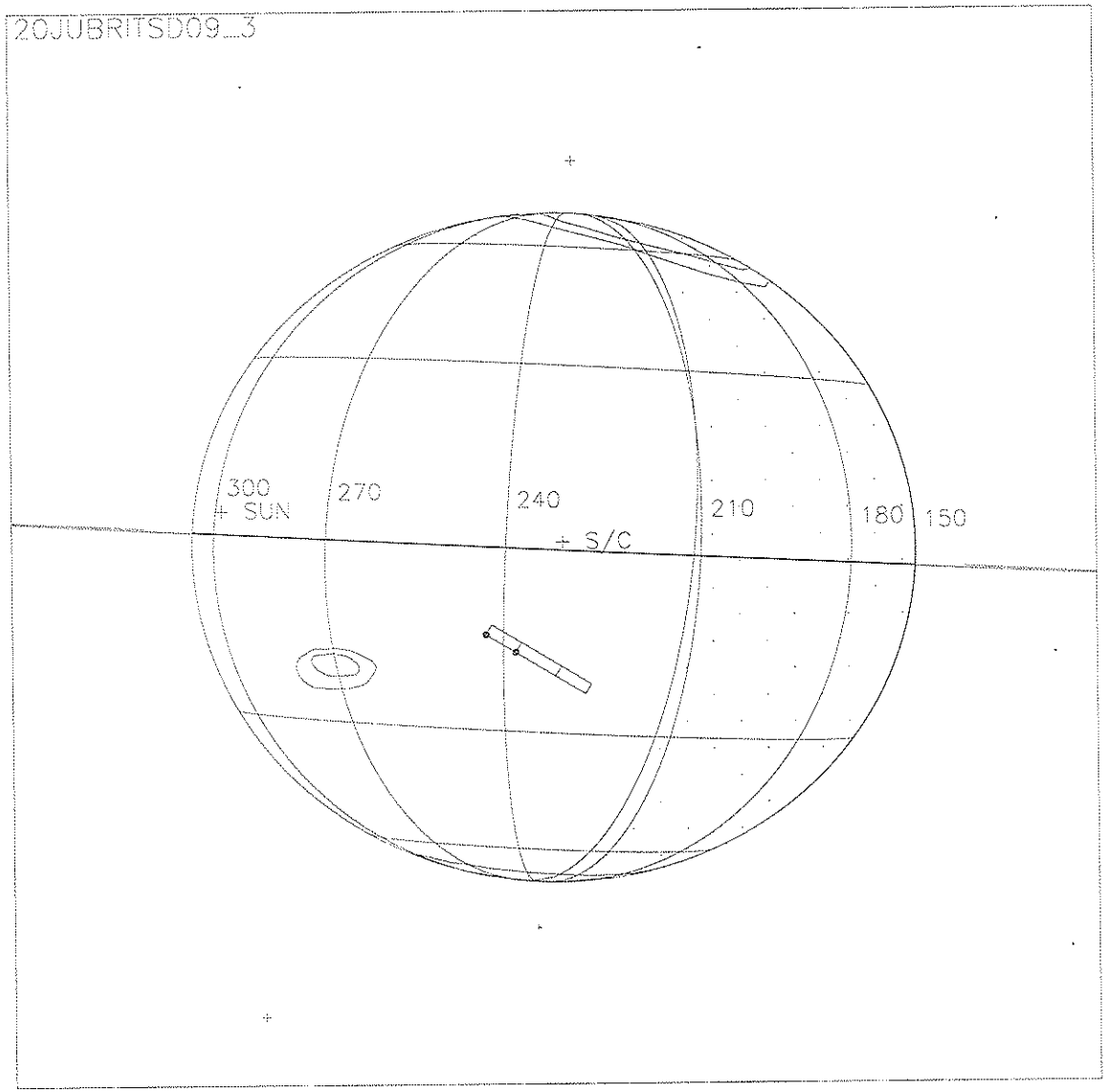

Start UTC_TIME : 1999-124 // 19:45:09.639
No End Time :
Start SCLK : 1/04980965:00:0:0

Target Body : JUPITER
Target Ra/Dec : 80.98/ 25.20 Deg
S/C to Body Center : 1316182. Km (18.410195 Rj)
Z-axis Pointing (Ra / Dec) : 198.35 / -3.06 Deg

Thu Apr 1 19:35:38 1999

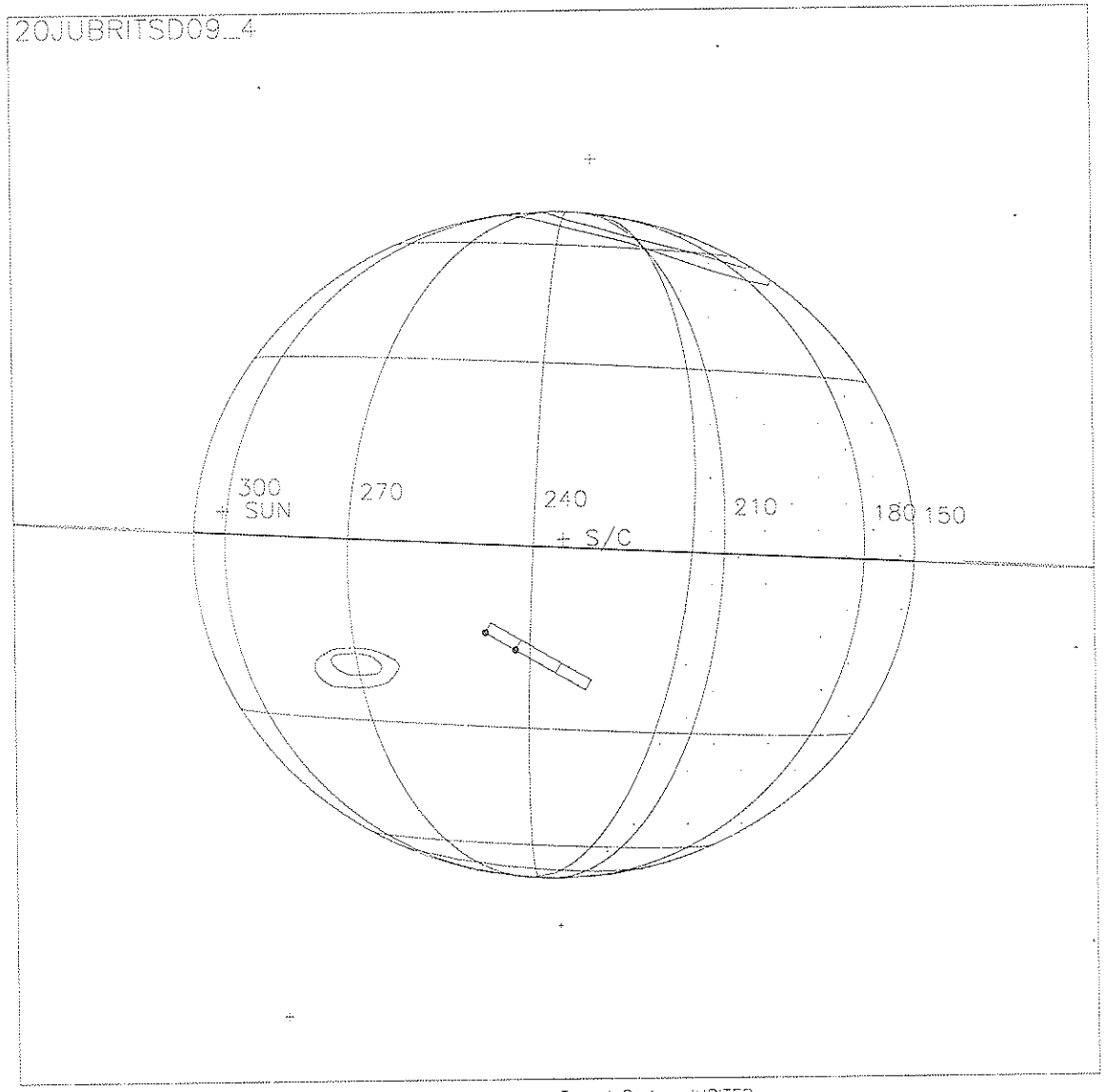

Start UTC_TIME : 1999-124 // 19:52:14.306
No End Time :
Start SCLK : 1/04980972:00:0:0

Target Body : JUPITER
Target Ra/Dec : 81.18/ 25.21 Deg
S/C to Body Center : 1319942. Km (18.462800 Rj)
Z-axis Pointing (Ra / Dec) : 198.35 / -3.06 Deg

Activity ID:	Orbit 20	OAPEL JUAURORA	SeqNo 02-
Title	Aurora north		Instrument UVS
Requestor	UVS-AWG/W. KENT TOBISKA	Team UVS	Working Group AWG

Time System	CDS	Load ID	20A	Calendar Date	05/04/99 Week 70

Start	JEE+CDS 00001608:00:0	99-124/20:06:28.800	JEE+001/03:05:52.000
End	JEE+CDS 00001615:00:0	99-124/20:13:33.466	JEE+001/03:12:56.666
Duration	00000007:00:0	000/00:07:04.666	000/00:07:04.666

Top Label	20JUAURORA02-				
Bottom Label	realtime				
Plot Key	UVS	Type	SCI		
CDS Bytes	94	Report Options	BOTH	Scan Platform	Yes
CDS Source	OAP	Spin State	DUAL	DMS	No

Observation Objective

Jupiter aurora observations of Lyman-a and H2 emissions near the 180 (N) longitude. We will attempt to capture the Io fluxtube footprint (IFT) and any fluxtube that maps from Europa to Jupiter to understand long-term magnetosphere and Jovian upper atmosphere interaction. This is a realtime observation for 7 RIMs using Ly-a 88-step mini-scans and is also being recorded as a ridealong with SSI aurora image. Distance from Jupiter = 18.5 Rj.

MBTG = 0.017712
7 RIMs integration time
recorded ~75 sec (1008*75*0.5) = 0.073 MBTG

SELECT time	DESELECT time	MBTG
99-124/20:08:33.399	99-124/20:11:56.399	0.073

GEM Objective Phase 1 - Magnetospheric interactions

Design Detail

```
PSID  CDS  RIM   COMMAND PARAMETERS
384AF 00   00:00 COMMNT UVS RIM 0
157AF 38   00:00  CMDRS PLAN_DUR = 7 RIMS; EST_UVS_CMDS = 2 (34UVS)
           01:00      1  UVG:DF,FIXED,NORM,NORM,NORM,SAME,0,OFF,OFF,ON,ON,OFF,NOOVR,1,2C,7D,00,2C
           07:00      7  OFF:C1,FIXED,NORM,NORM,NORM,SAME,0,OFF,OFF,ON,OFF,OFF,NOOVR,1,2C,05,00,00
349AE 28   00:69 UVFLSH DISCRD,UVS
165QR 00   01:00 TARGET Lat/Lon = 58/182; use SSI target; TMC; plan_dur=5:70:0
349AF 28   06:69 UVFLSH PACKET,UVS
```

Thu Apr 1 19:47:27 1999

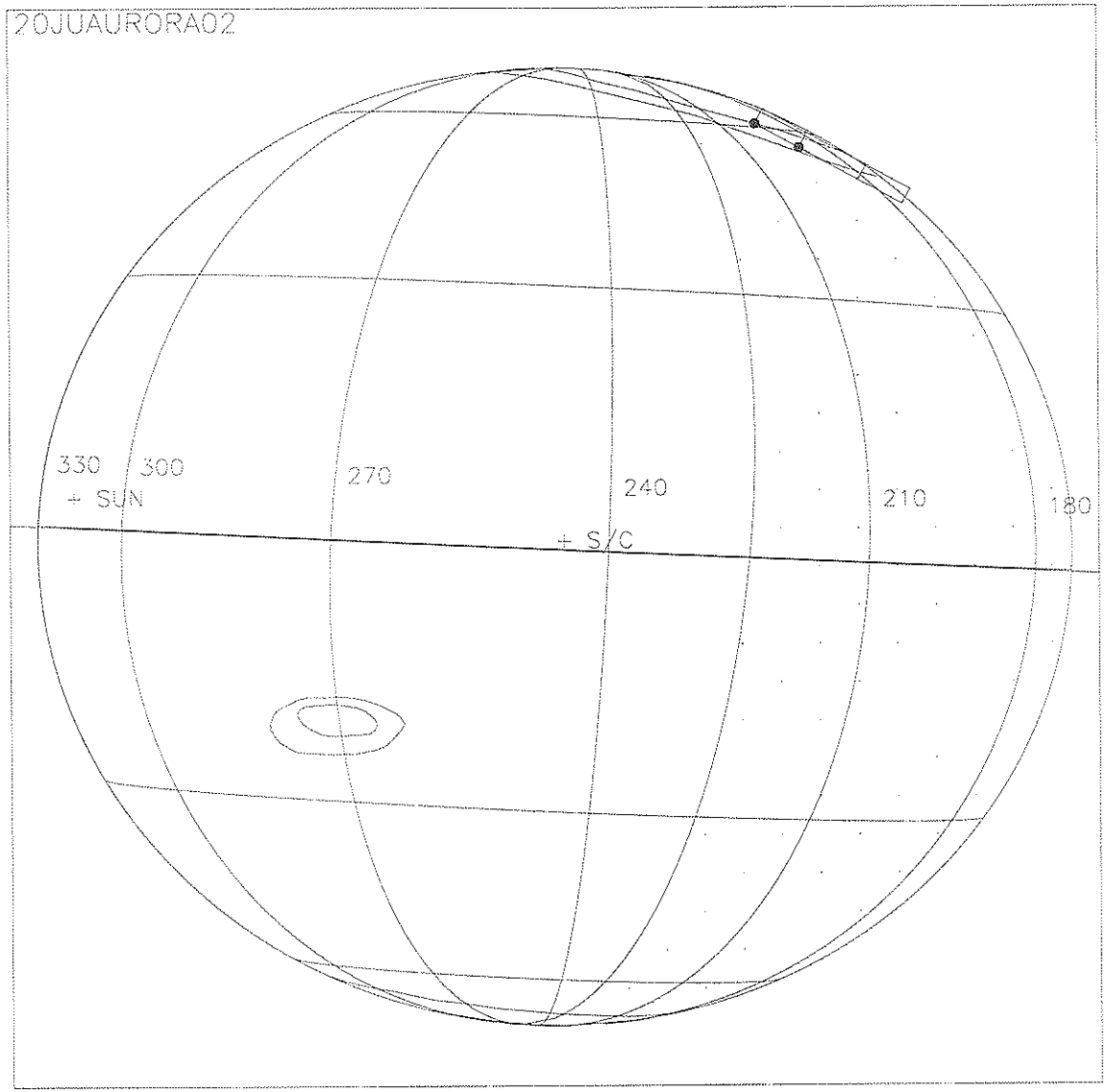

Start UTC_TIME : 1999-124 // 20:07:24.305
No End Time :
Start SCLK : 1/04980987:00:0:0

Target Body : JUPITER
Target Ra/Dec : 81.59/ 25.23 Deg
S/C to Body Center : 1327999. Km (18.575497 Rj)
Z-axis Pointing (Ra / Dec) : 198.35 / -3.06 Deg

Activity ID: Orbit 20 **OAPEL** JUSEBTRK **SeqNo** 03-

Title UVS AWG feature track **Instrument** UVS

Requestor UVS-AWG/W. KENT TOBISKA **Team** UVS **Working Group** AWG

Time System CDS **Load ID** 20A **Calendar Date** 05/04/99 **Week** 70

Start	JEE+CDS 00001617:00:0	99-124/20:15:34.800	JEE+001/03:14:58.000
End	JEE+CDS 00001621:00:0	99-124/20:19:37.466	JEE+001/03:19:00.666
Duration	00000004:00:0	000/00:04:02.666	000/00:04:02.666

Top Label 20JUSEBTRK03-

Bottom Label realtime

Plot Key UVS **Type** SCI

CDS Bytes 121 **Report Options** BOTH **Scan Platform** Yes

CDS Source OAP **Spin State** DUAL **DMS** Yes

Observation Objective

20JUSEBTRK03: AWG feature track with SSI to look at south equatorial belt.

Rj = 18.5
UVS configuration: full F/F scans.

MBTG = 0.017712

Design Detail

```
PSID   CDS   RIM   COMMAND PARAMETERS
384AU  00    00:00 COMMNT UVS RIM 0
157AU  38    00:00  CMDRS PLAN_DUR = 4 RIMS; EST_UVS_CMDS = 2 (34UVS)
             01:00      1   UVF:07,SCAN,NORM,NORM,NORM,SAME,0,ON,OFF,OFF,ON,OFF,NOOVR,1,00,9C,00,00
             04:00      4   OFF:C1,FIXED,NORM,NORM,NORM,SAME,0,OFF,OFF,ON,OFF,OFF,NOOVR,1,2C,05,00,00
349JQ  28    00:69 UVFLSH DISCRD,UVS
165CX  27    01:00 TARGET Lat/Lon = -14.94/293.21; (RA/Dec = 84.17/24.59)
349JR  28    03:69 UVFLSH PACKET,UVS
```

Thu Apr 1 19:48:48 1999

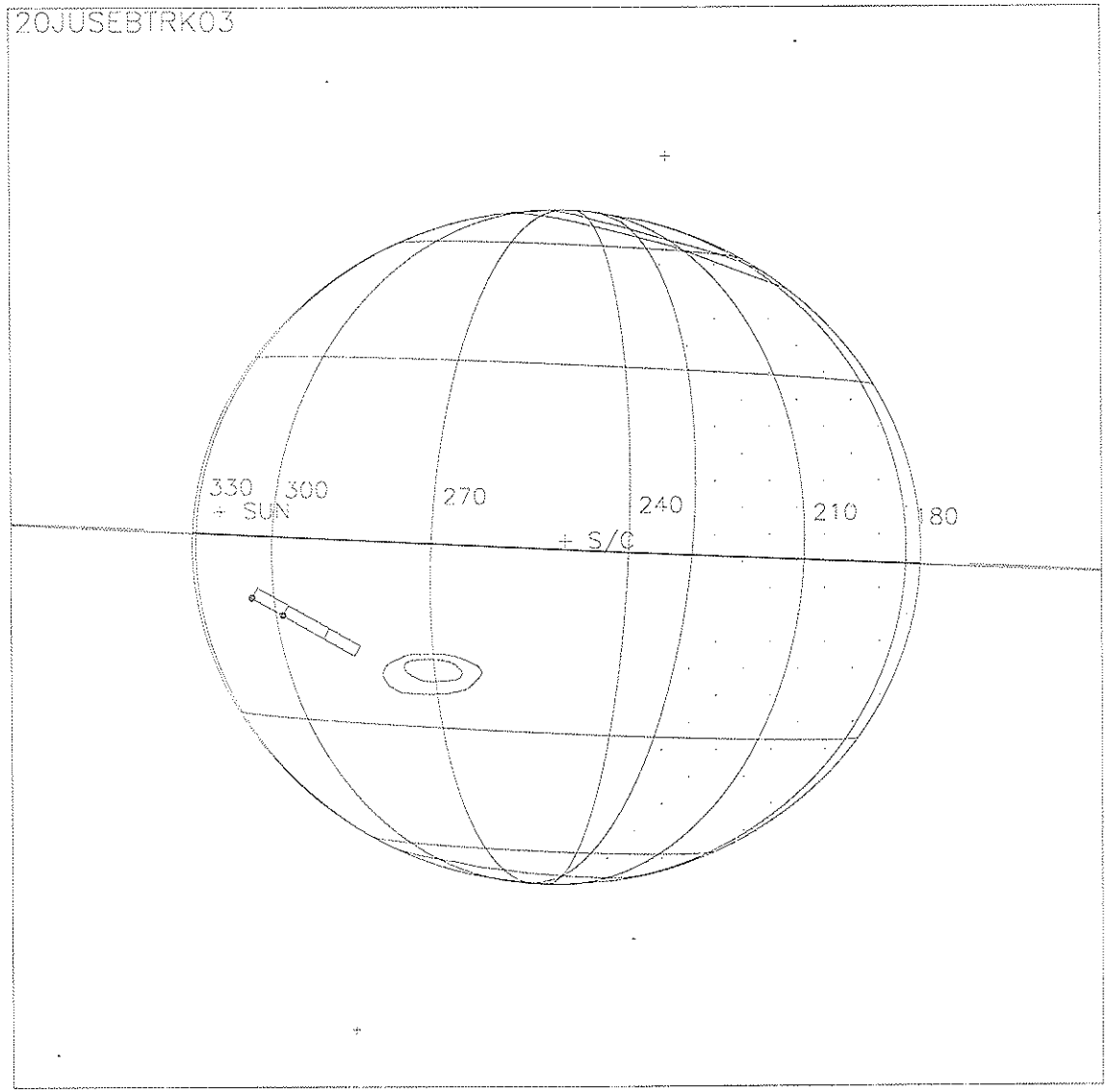

Start UTC_TIME : 1999-124 // 20:16:30.305
No End Time :
Start SCLK : 1/04980996:00:0:0

Target Body : JUPITER
Target Ra/Dec : 81.84/ 25.24 Deg
S/C to Body Center : 1332832. Km (18.643095 Rj)
Z--axis Pointing (Ra / Dec) : 198.35 / -3.06 Deg

Activity ID:	Orbit 20	OAPEL	JUBRITSD	SeqNo	10-
Title	Brightside hydrocarbons			Instrument	UVS
Requestor	UVS-AWG/W. KENT TOBISKA	Team	UVS	Working Group	AWG

Time System	CDS	Load ID	20A	Calendar Date	05/04/99 Week 70
Start	JEE+CDS 00001621:00:0	99-124/20:19:37.466		JEE+001/03:19:00.666	
End	JEE+CDS 00001640:00:0	99-124/20:38:50.133		JEE+001/03:38:13.333	
Duration	00000019:00:0	000/00:19:12.667		000/00:19:12.667	

Top Label	20JUBRITSD10-				
Bottom Label	realtime				
Plot Key	UVS	Type	SCI		
CDS Bytes	240	Report Options	BOTH	Scan Platform	Yes
CDS Source	OAP	Spin State	DUAL	DMS	No

Observation Objective

Observe brightside hydrocarbon emissions to develop a statistically significant acetylene and ammonia spectrum at four latitudes. This study will help understand minor species chemistry related to dynamics in Jupiter's stratosphere/upper troposphere. Low photon count rates require substantial integration time. This is a realtime observation for 6.13 hours during the feature track window using either a G/G 176 step miniscan covering 1496-1755 Å or a G/G full scan at a distance from Jupiter = 18.6 Rj. 4 observation latitudes are north high and mid lat, south mid and high lat. The lighting and view geometry is designed so that 1/mu + 1/mu_0 = 3.88.

MBTG = 0.017712; 13 RIMs integration time
south mid latitude; full-scan G/G
GEM Objective Phase 2 - Jupiter atm. dynamics

Design Detail

```
PSID   CDS   RIM   COMMAND PARAMETERS
384AV  00   00:00 COMMNT UVS RIM 0
157AV  94   00:00  CMDRS PLAN_DUR = 19 RIMS; EST_UVS_CMDS = 6 (34UVS)
            01:00      1  UVG:07,SCAN,NORM,NORM,NORM,SAME,0,OFF,OFF,ON,ON,OFF,NOOVR,1,2C,9D,00,00
            05:00      5  OFF:C1,FIXED,NORM,NORM,NORM,SAME,0,OFF,OFF,ON,OFF,OFF,NOOVR,1,2C,05,00,00

            08:00      8  UVG:07,SCAN,NORM,NORM,NORM,SAME,0,OFF,OFF,ON,ON,OFF,NOOVR,1,2C,9D,00,00
            10:00     10  OFF:C1,FIXED,NORM,NORM,NORM,SAME,0,OFF,OFF,ON,OFF,OFF,NOOVR,1,2C,05,00,00
            12:00     12  UVG:07,SCAN,NORM,NORM,NORM,SAME,0,OFF,OFF,ON,ON,OFF,NOOVR,1,2C,9D,00,00
            19:00     19  OFF:C1,FIXED,NORM,NORM,NORM,SAME,0,OFF,OFF,ON,OFF,OFF,NOOVR,1,2C,05,00,00
349JR  00  -00:69 UVFLSH (previous observation zeros buffer)
165CY  27   01:00 TARGET Lat/Lon = -19.5/255.8 (RA/Dec = 82.15/24.29) [3.8815]
165CZ  27   08:00 TARGET Lat/Lon = -19.5/260.1 (RA/Dec = 82.34/24.30) [3.8791]
165DZ  27   12:00 TARGET Lat/Lon = -19.5/262.6 (RA/Dec = 82.46/24.31) [3.8728]
117EZ  37   14:00 CSMOS  #_strip=1; obs_slw_rt=0.02; repo_dur=0:46; strip_dur=3:45; cn_del_s=-1.7
349KT  28   18:69 UVFLSH PACKET,UVS
```

Thu Apr 1 19:50:28 1999

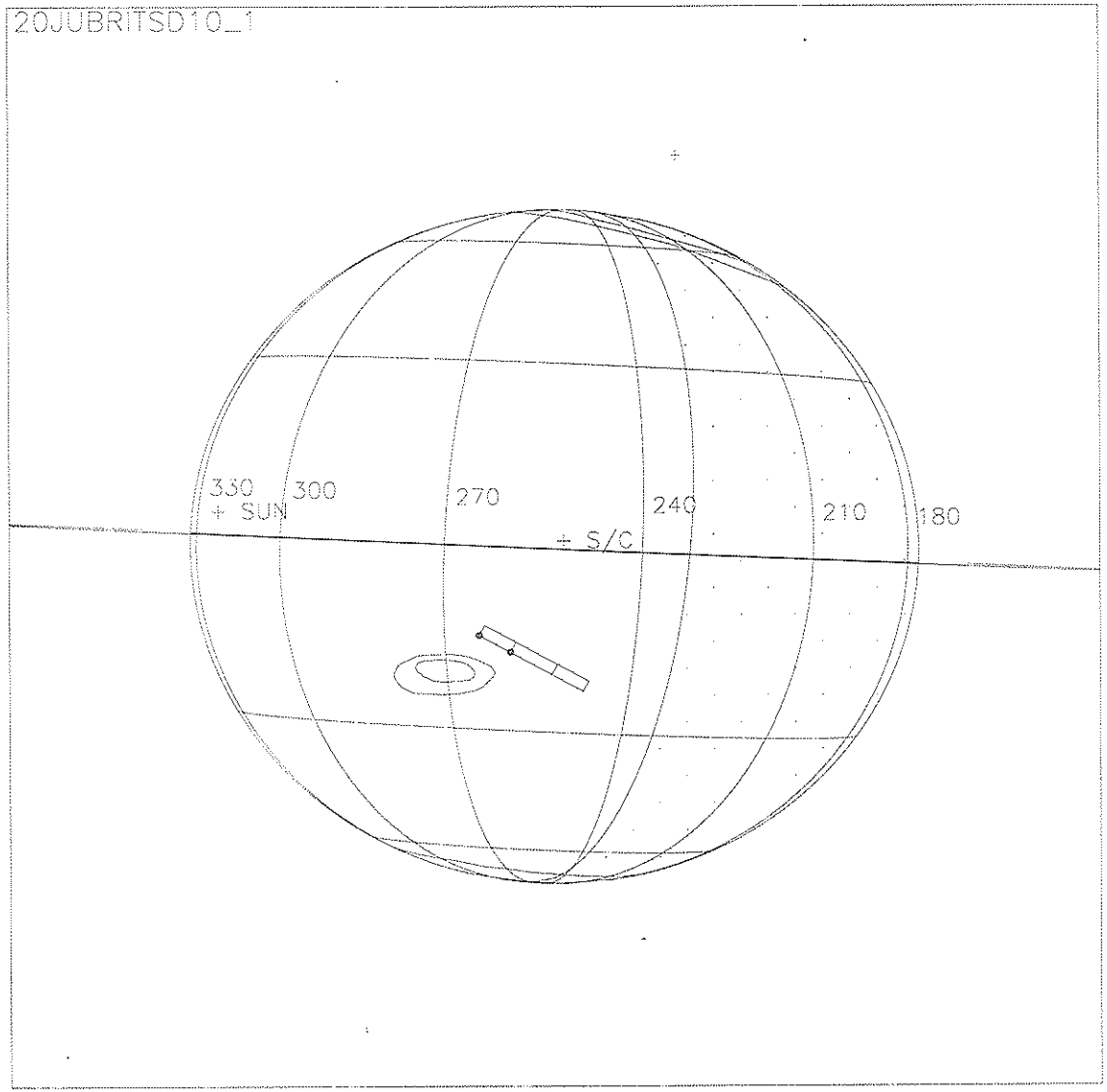

Start UTC_TIME : 1999-124 // 20:20:32.971
No End Time :
Start SCLK : 1/04981000:00:0:0

Target Body : JUPITER
Target Ra/Dec : 81.95/ 25.24 Deg
S/C to Body Center : 133497:. Km (18.673135 Rj)
Z-axis Pointing (Ra / Dec) : 198.35 / -3.06 Deg

Thu Apr 1 19:51:31 1999

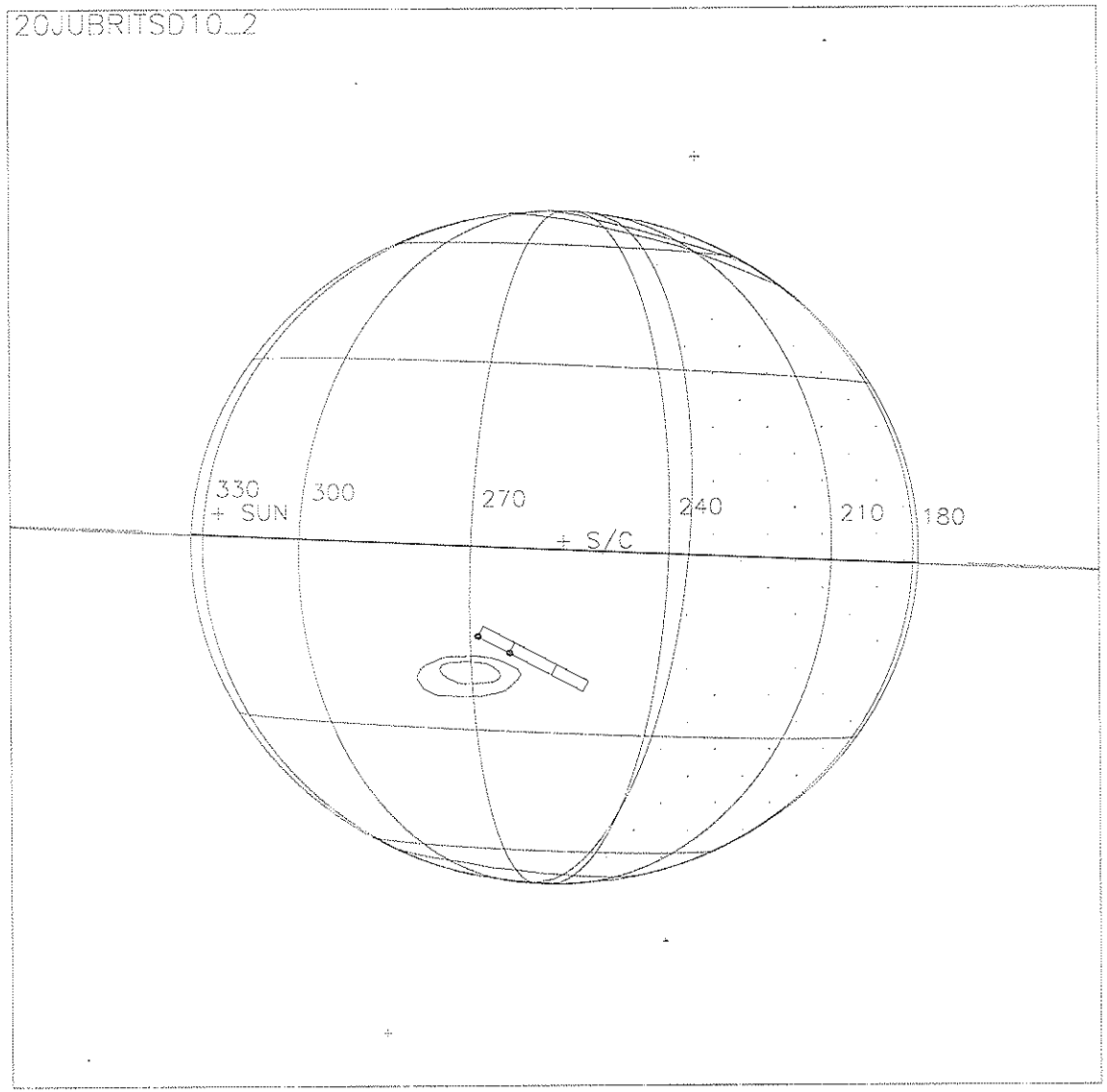

Start UTC_TIME : 1999-124 // 20:27:37.638
No End Time :
Start SCLK : 1/04981007:00:0:0

Target Body : JUPITER
Target Ra/Dec : 82.14/ 25.25 Deg
S/C to Body Center : 1338737. Km (18.725695 Rj)
Z-axis Pointing (Ra / Dec) : 198.35 / -3.06 Deg

Thu Apr 1 19:52:51 1999

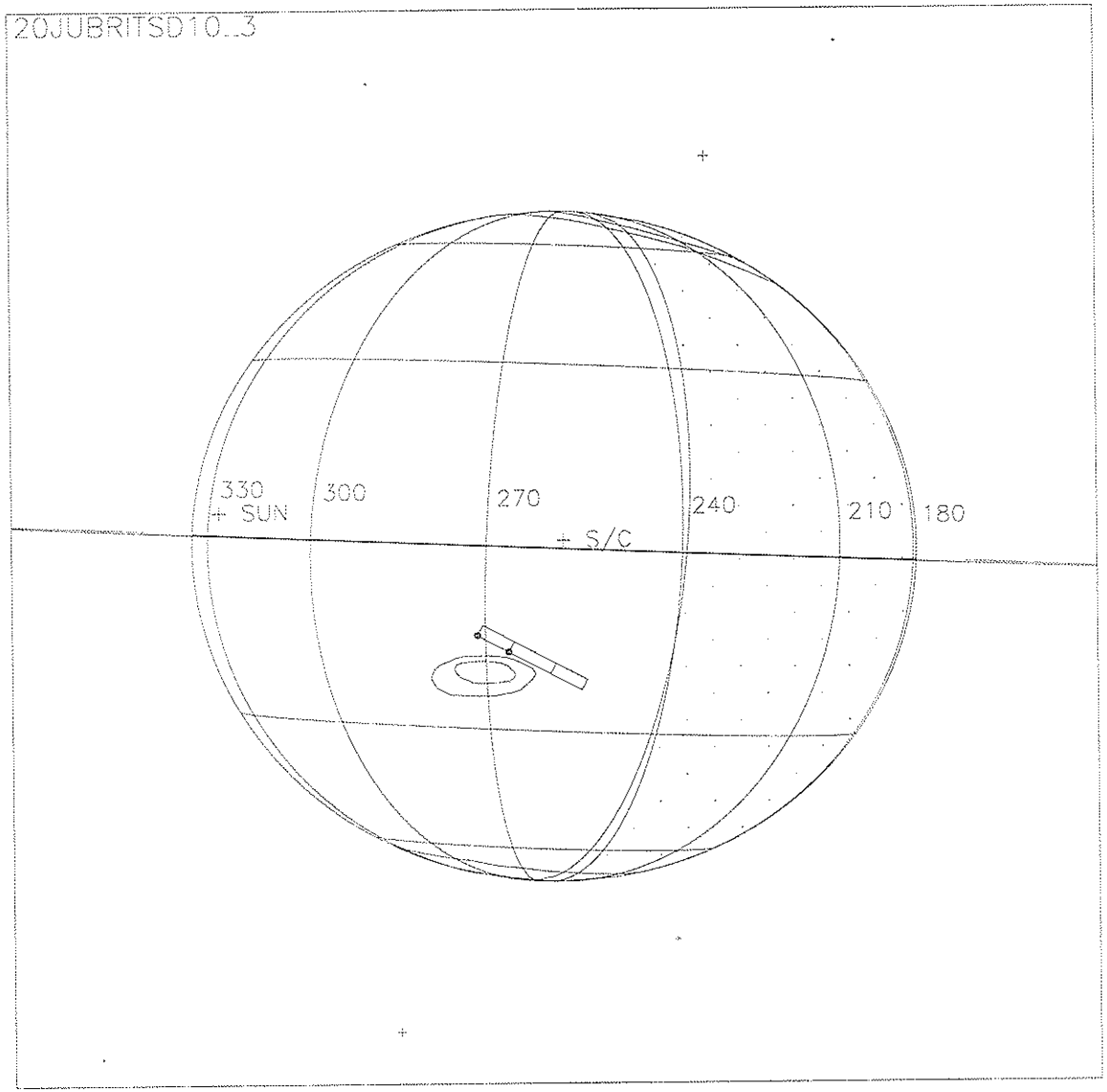

Start UTC_TIME : 1999-124 // 20:31:40.304
No End Time :
Start SCLK : 1/04981011:00:0:0

Target Body : JUPITER
Target Ra/Dec : 82.25/ 25.25 Deg
S/C to Body Center : 1340884. Km (18.755726 Rj)
Z-axis Pointing (Ra / Dec) : 198.35 / -3.06 Deg

Activity ID: Orbit 20 **OAPEL** JUSEBTRK **SeqNo** 13-

Title UVS AWG feature track **Instrument** UVS

Requestor UVS-AWG/W. KENT TOBISKA **Team** UVS **Working Group** AWG

Time System CDS **Load ID** 20A **Calendar Date** 05/04/99 **Week** 70

Start	JEE+CDS 00001644:00:0	99-124/20:42:52.800	JEE+001/03:42:16.000
End	JEE+CDS 00001648:00:0	99-124/20:46:55.466	JEE+001/03:46:18.666
Duration	00000004:00:0	000/00:04:02.666	000/00:04:02.666

Top Label 20JUSEBTRK13-

Bottom Label realtime

Plot Key UVS **Type** SCI

CDS Bytes 121 **Report Options** BOTH **Scan Platform** Yes

CDS Source OAP **Spin State** DUAL **DMS** Yes

Observation Objective

20JUSEBTRK13: AWG feature track with SSI to look at south equatorial belt.

Rj = 18.7
UVS configuration: full F/F scans.

MBTG = 0.017712

Design Detail

```
PSID   CDS   RIM   COMMAND PARAMETERS
384A#  00   00:00 COMMNT UVS RIM 0
157AW  38   00:00  CMDRS PLAN_DUR = 4 RIMS; EST_UVS_CMDS = 2 (34UVS)
            01:00      1  UVF:07,SCAN,NORM,NORM,NORM,SAME,0,ON,OFF,OFF,ON,OFF,NOOVR,1,00,9C,00,00
            04:00      4  OFF:C1,FIXED,NORM,NORM,NORM,SAME,0,OFF,OFF,ON,OFF,OFF,NOOVR,1,2C,05,00,00
349JS  28   00:69 UVFLSH DISCRD,UVS
165BY  27   01:00 TARGET Lat/Lon = -15.00/295.58; (RA/Dec = 84.24/24.59)
349JT  28   03:69 UVFLSH PACKET,UVS
```

Thu Apr 1 20:01:47 1999

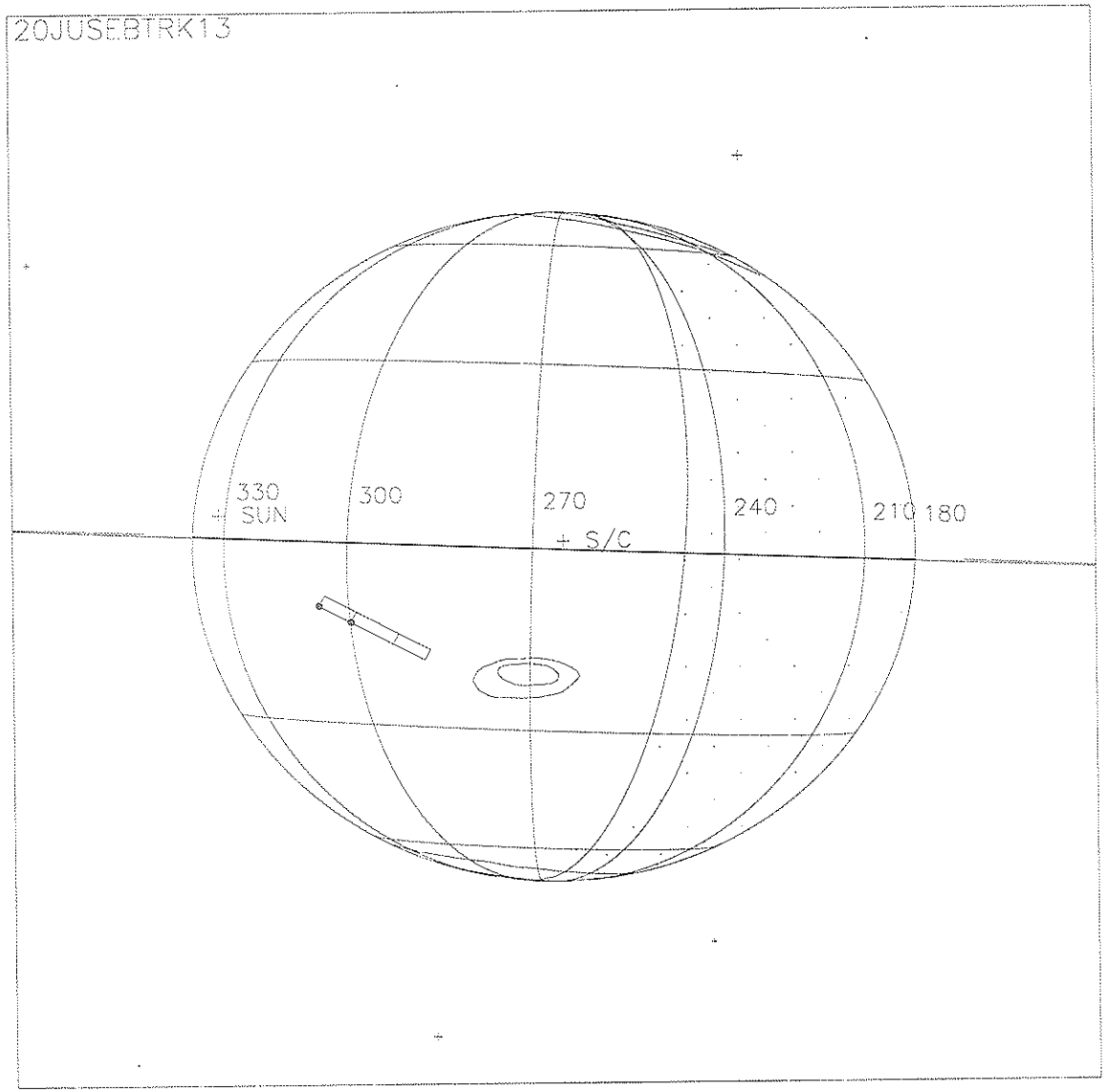

Start UTC_TIME : 1999-124 // 20:43:48.304
No End Time :
Start SCLK : 1/04981023:00:0:0

Target Body : JUPITER
Target Ra/Dec : 82.57/ 25.27 Deg
S/C to Body Center : 1347324. Km (18.845796 Rj)
Z-axis Pointing (Ra / Dec) : 198.35 / -3.06 Deg

Activity ID: Orbit 20 **OAPEL** JUSEBTRK **SeqNo** 23-

Title UVS AWG feature track **Instrument** UVS

Requestor UVS-AWG/W. KENT TOBISKA **Team** UVS **Working Group** AWG

Time System CDS **Load ID** 20A **Calendar Date** 05/04/99 **Week** 70

Start	JEE+CDS 00001703:00:0	99-124/21:42:32.133	JEE+001/04:41:55.333
End	JEE+CDS 00001707:00:0	99-124/21:46:34.800	JEE+001/04:45:58.000
Duration	00000004:00:0	000/00:04:02.667	000/00:04:02.667

Top Label 20JUSEBTRK23-

Bottom Label realtime

Plot Key	UVS	**Type**	SCI		
CDS Bytes	121	**Report Options**	BOTH	**Scan Platform**	Yes
CDS Source	OAP	**Spin State**	DUAL	**DMS**	Yes

Observation Objective

20JUSEBTRK23: AWG feature track with SSI to look at south equatorial belt.

Rj = 19.3
UVS configuration: full F/F scans.

MBTG = 0.017712

Design Detail

```
PSID   CDS   RIM   COMMAND PARAMETERS
384AZ  00    00:00 COMMNT UVS RIM 0
157AZ  38    00:00  CMDRS PLAN_DUR = 4 RIMS; EST_UVS_CMDS = 2 (34UVS)
             01:00      1  UVF:07,SCAN,NORM,NORM,NORM,SAME,0,ON,OFF,OFF,ON,OFF,NOOVR,1,00,9C,00,00
             04:00      4  OFF:C1,FIXED,NORM,NORM,NORM,SAME,0,OFF,OFF,ON,OFF,OFF,NOOVR,1,2C,05,00,00
349JW  28    00:69 UVFLSH DISCRD,UVS
165BR  27    01:00 TARGET Lat/Lon = -15.04/296.07; (RA/Dec =  83.82/24.58)
349JX  28    03:69 UVFLSH PACKET,BOTH (packet 20TV20NANS01 EUV data also)
```

Thu Apr 1 20:10:23 1999

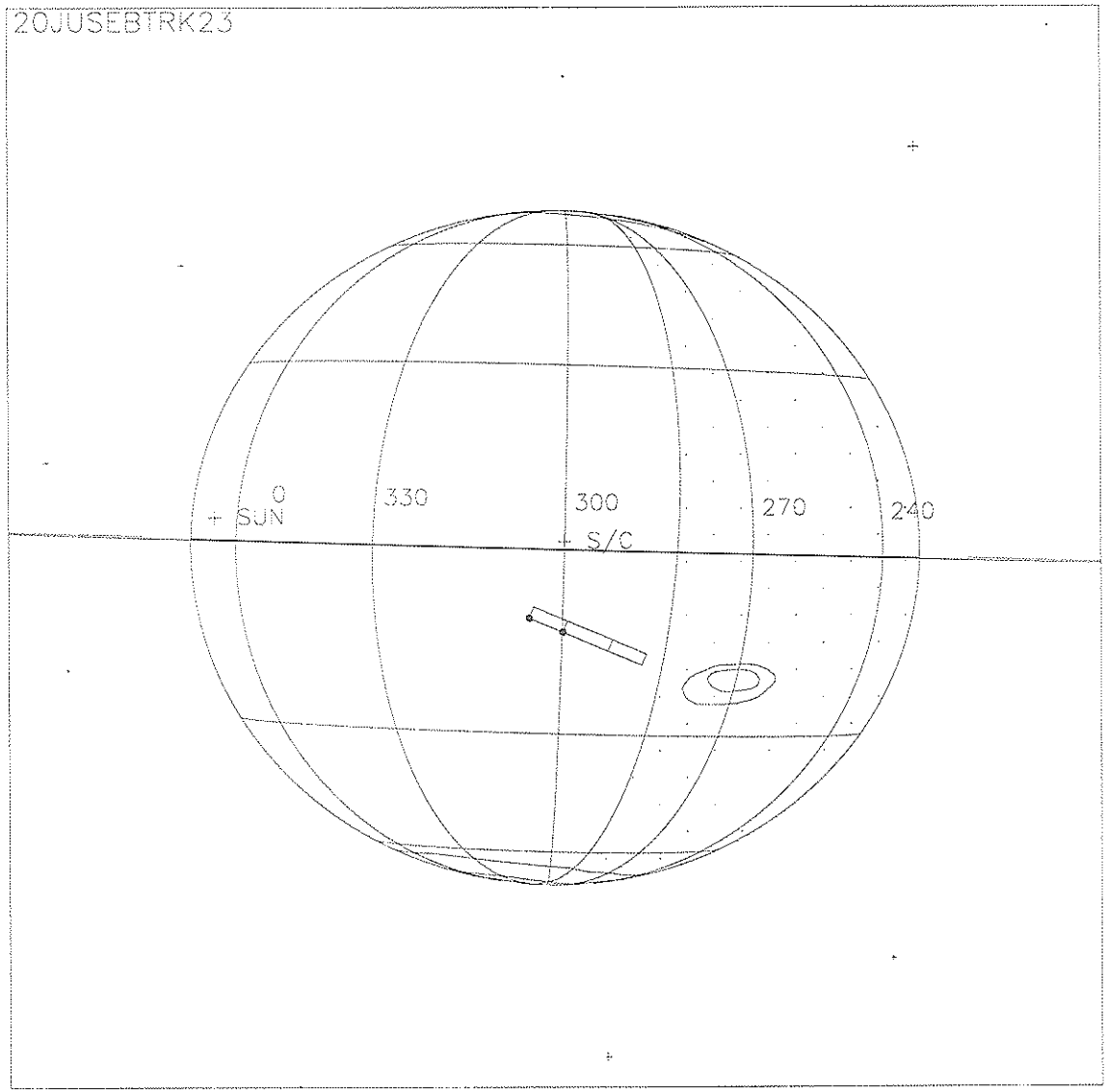

Start UTC_TIME : 1999-124 // 21:43:27.635
No End Time :
Start SCLK : 1/04981082:00:0:0

Target Body : JUPITER
Target Ra/Dec : 84.11/ 25.31 Deg
S/C to Body Center : 1378947. Km (19.288136 Rj)
Z-axis Pointing (Ra / Dec) : 198.35 / -3.06 Deg

Activity ID:	Orbit 20	OAPEL	JUWOVTRK	SeqNo	13-
Title	UVS AWG feature track			Instrument	UVS
Requestor	UVS-AWG/W. KENT TOBISKA	Team	UVS	Working Group	AWG

Time System	CDS	Load ID	20A	Calendar Date	05/04/99 Week 70
Start	JEE+CDS 00001757:00:0	99-124/22:37:08.133		JEE+001/05:36:31.333	
End	JEE+CDS 00001761:00:0	99-124/22:41:10.800		JEE+001/05:40:34.000	
Duration	00000004:00:0	000/00:04:02.667		000/00:04:02.667	

Top Label	20JUWOVTRK13-				
Bottom Label	realtime				
Plot Key	UVS	Type	SCI		
CDS Bytes	121	Report Options	BOTH	Scan Platform	Yes
CDS Source	OAP	Spin State	DUAL	DMS	Yes

Observation Objective

20JUWOVTRK13: AWG feature track with SSI to look at white ovals.

Rj = 19.6
UVS configuration: full F/F scans.

MBTG = 0.017712

Design Detail

```
PSID  CDS  RIM   COMMAND PARAMETERS
384BX 00   00:00 COMMNT UVS RIM 0
157BX 38   00:00  CMDRS PLAN_DUR = 4 RIMS; EST_UVS_CMDS = 2 (34UVS)
           01:00      1  UVF:07,SCAN,NORM,NORM,NORM,SAME,0,ON,OFF,OFF,ON,OFF,NOOVR,1,00,9C,00,00
           04:00      4  OFF:C1,FIXED,NORM,NORM,NORM,SAME,0,OFF,OFF,ON,OFF,OFF,NOOVR,1,2C,05,00,00
349JY 28   00:69 UVFLSH DISCRD,UVS
165BJ 27   01:00 TARGET Lat/Lon = -32.99/341.74; (RA/Dec = 85.92/23.86)
349JZ 28   03:69 UVFLSH PACKET,UVS
```

Thu Apr 1 20:16:38 1999

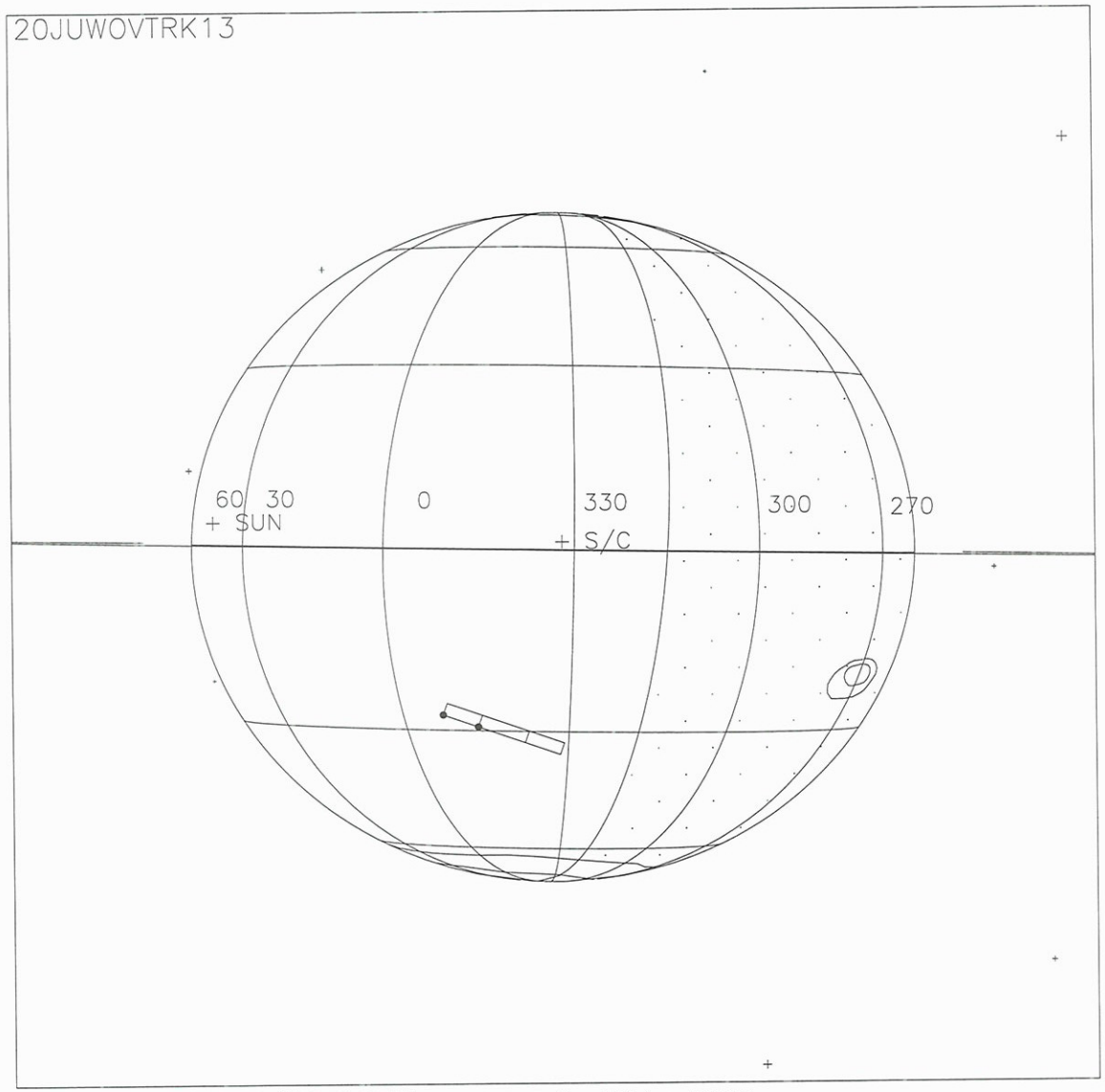

Start UTC_TIME : 1999-124 // 22:38:03.633
No End Time :
Start SCLK : 1/04981136:00:0:0

Target Body : JUPITER
Target Ra/Dec : 85.47/ 25.34 Deg
S/C to Body Center : 1407829. Km (19.692120 Rj)
Z-axis Pointing (Ra / Dec) : 198.35 / -3.06 Deg

Activity ID: Orbit 20 **OAPEL** JUBRITSD **SeqNo** 14-

Title Brightside hydrocarbons **Instrument** UVS

Requestor UVS-AWG/W. KENT TOBISKA **Team** UVS **Working Group** AWG

Time System CDS **Load ID** 20A **Calendar Date** 05/04/99 **Week** 70

Start	JEE+CDS 00001774:00:0	99-124/22:54:19.466	JEE+001/05:53:42.666
End	JEE+CDS 00001811:00:0	99-124/23:31:44.133	JEE+001/06:31:07.333
Duration	00000037:00:0	000/00:37:24.667	000/00:37:24.667

Top Label 20JUBRITSD14-

Bottom Label realtime

Plot Key UVS **Type** SCI

CDS Bytes 305 **Report Options** BOTH **Scan Platform** Yes

CDS Source OAP **Spin State** DUAL **DMS** No

Observation Objective

Observe brightside hydrocarbon emissions to develop a statistically significant acetylene and ammonia spectrum at four latitudes. This study will help understand minor species chemistry related to dynamics in Jupiter's stratosphere/upper troposphere. Low photon count rates require substantial integration time. This is a realtime observation for 6.13 hours during the feature track window using either a G/G 176 step miniscan covering 1496-1755 Å or a G/G full scan at a distance from Jupiter = 19.8 Rj. 4 observation latitudes are north high and mid lat, south mid and high lat. The lighting and view geometry is designed so that 1/mu + 1/mu_0 = 3.88.

MBTG = 0.017712; 25 RIMs integration time
south high latitude; 176-step mini-scan G/G
GEM Objective Phase 2 - Jupiter atm. dynamics

Design Detail

```
PSID   CDS   RIM   COMMAND PARAMETERS
384BW  00    00:00 COMMNT UVS RIM 0
157BW  94    00:00  CMDRS PLAN_DUR = 37 RIMS; EST_UVS_CMDS = 6 (34UVS)
             01:00      1  UVG:E3,FIXED,NORM,NORM,NORM,SAME,0,OFF,OFF,ON,ON,OFF,NOOVR,1,1A,8E,00,00
             12:00     12  OFF:C1,FIXED,NORM,NORM,NORM,SAME,0,OFF,OFF,ON,OFF,OFF,NOOVR,1,2C,05,00,00
             22:00     22  UVG:E3,FIXED,NORM,NORM,NORM,SAME,0,OFF,OFF,ON,ON,OFF,NOOVR,1,1A,8E,00,00
             33:00     33  OFF:C1,FIXED,NORM,NORM,NORM,SAME,0,OFF,OFF,ON,OFF,OFF,NOOVR,1,2C,05,00,00
             34:00     34  UVG:E3,FIXED,NORM,NORM,NORM,SAME,0,OFF,OFF,ON,ON,OFF,NOOVR,1,1A,8E,00,00
             37:00     37  OFF:C1,FIXED,NORM,NORM,NORM,SAME,0,OFF,OFF,ON,OFF,OFF,NOOVR,1,2C,05,00,00
349AZ  28    00:69 UVFLSH DISCRD,UVS
165BI  27    01:00 TARGET Lat/Lon = -42/3.6 (RA/Dec = 86.78/23.54) [3.8736]
117BI  37    03:00 CSMOS  #_strip=2; obs_slw_rt=0.02; repo_dur=0:46; strip_dur=3:45; cn_del_s=-1.6
165BH  27    22:00 TARGET Lat/Lon = -42/16.2 (RA/Dec = 87.28/23.56) [3.8831]
117BH  37    24:00 CSMOS  #_strip=2; obs_slw_rt=0.02; repo_dur=0:46; strip_dur=3:45; cn_del_s=-1.6
165BG  27    34:00 TARGET Lat/Lon = -42/23.5 (RA/Dec = 87.57/23.57) [3.8869]
349AY  28    36:69 UVFLSH PACKET,UVS
```

Mon Apr 5 22:31:31 1999

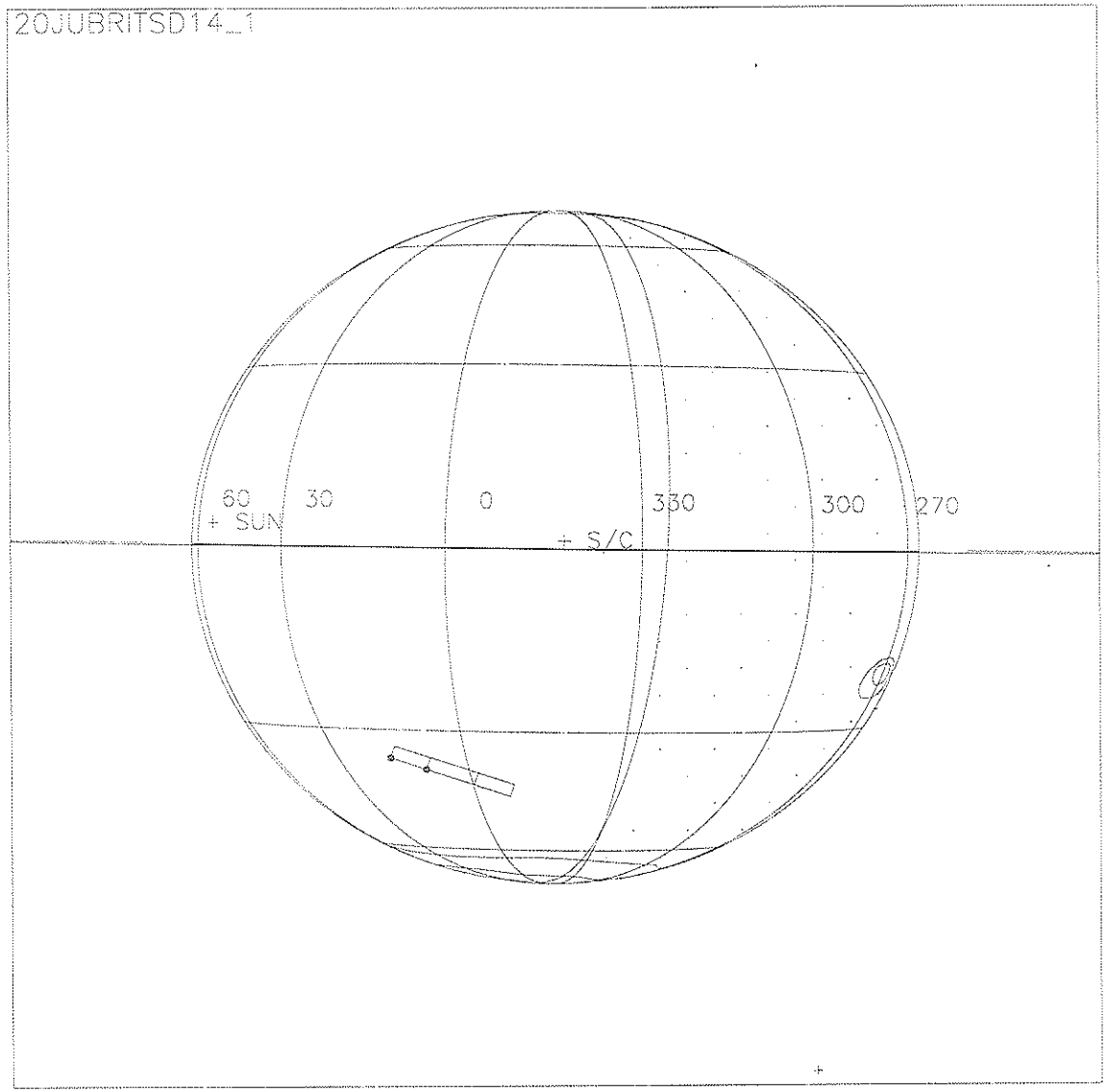

Start UTC_TIME : 1999-124 // 22:55:14.966
No End Time :
Start SCLK : 1/04981153:00:0:0

Target Body : JUPITER
Target Ra/Dec : 85.88/ 25.34 Deg
S/C to Body Center : 1416907. Km (19.819104 RJ)
Z-axis Pointing (Ra / Dec) : 198.35 / -3.06 Deg

Mon Apr 5 22:33:57 1999

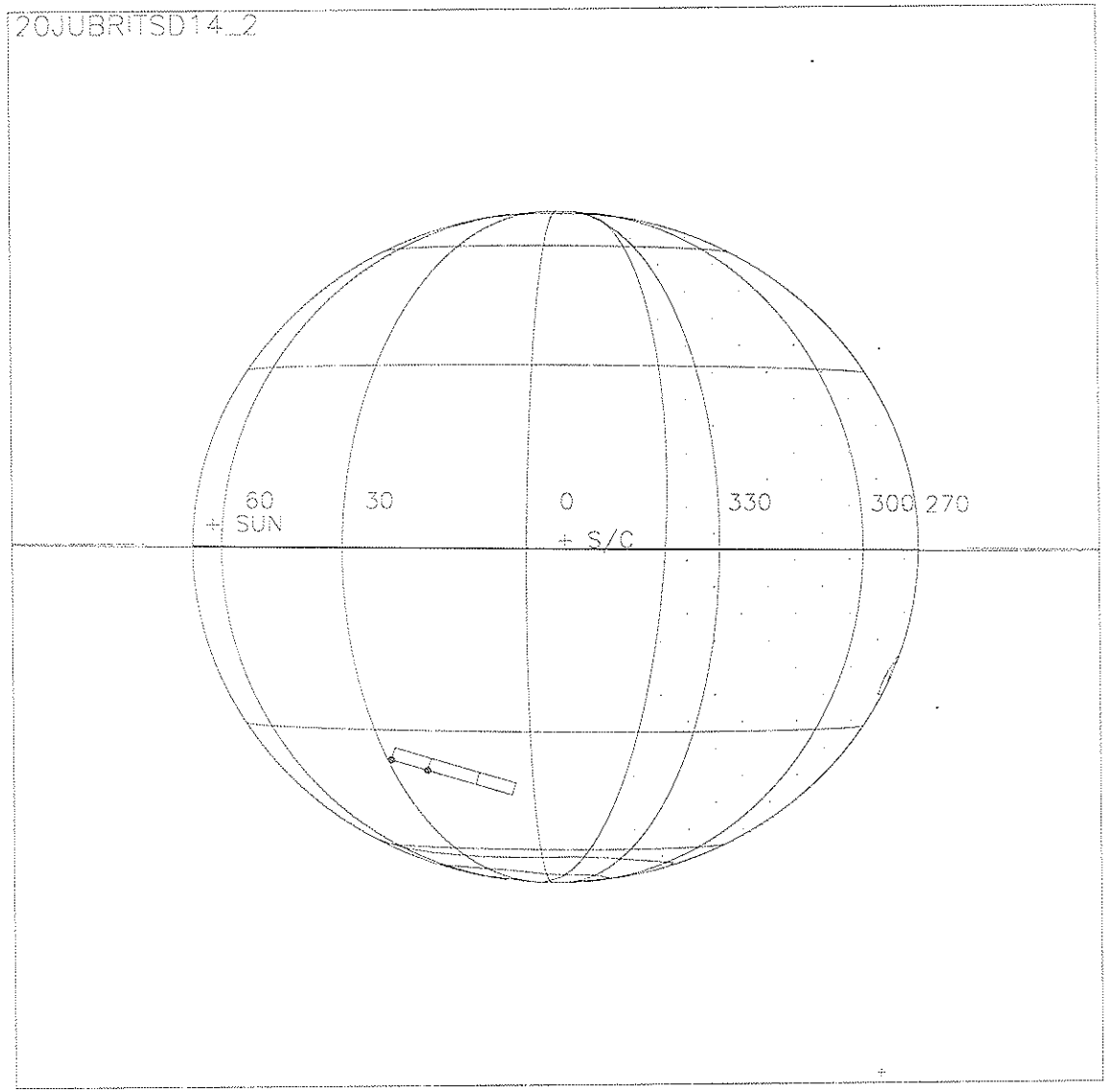

Start UTC_TIME : 1999-124 // 23:16:28.965
No End Time :
Start SCLK : 1/04981174:00:0:0

Target Body : JUPITER
Target Ra/Dec : 86.39/ 25.35 Deg
S/C to Body Center : 1428112. Km (19.975825 Rj)
Z-axis Pointing (Ra / Dec) : 198.35 / -3.06 Deg

Mon Apr 5 22:37:00 1999

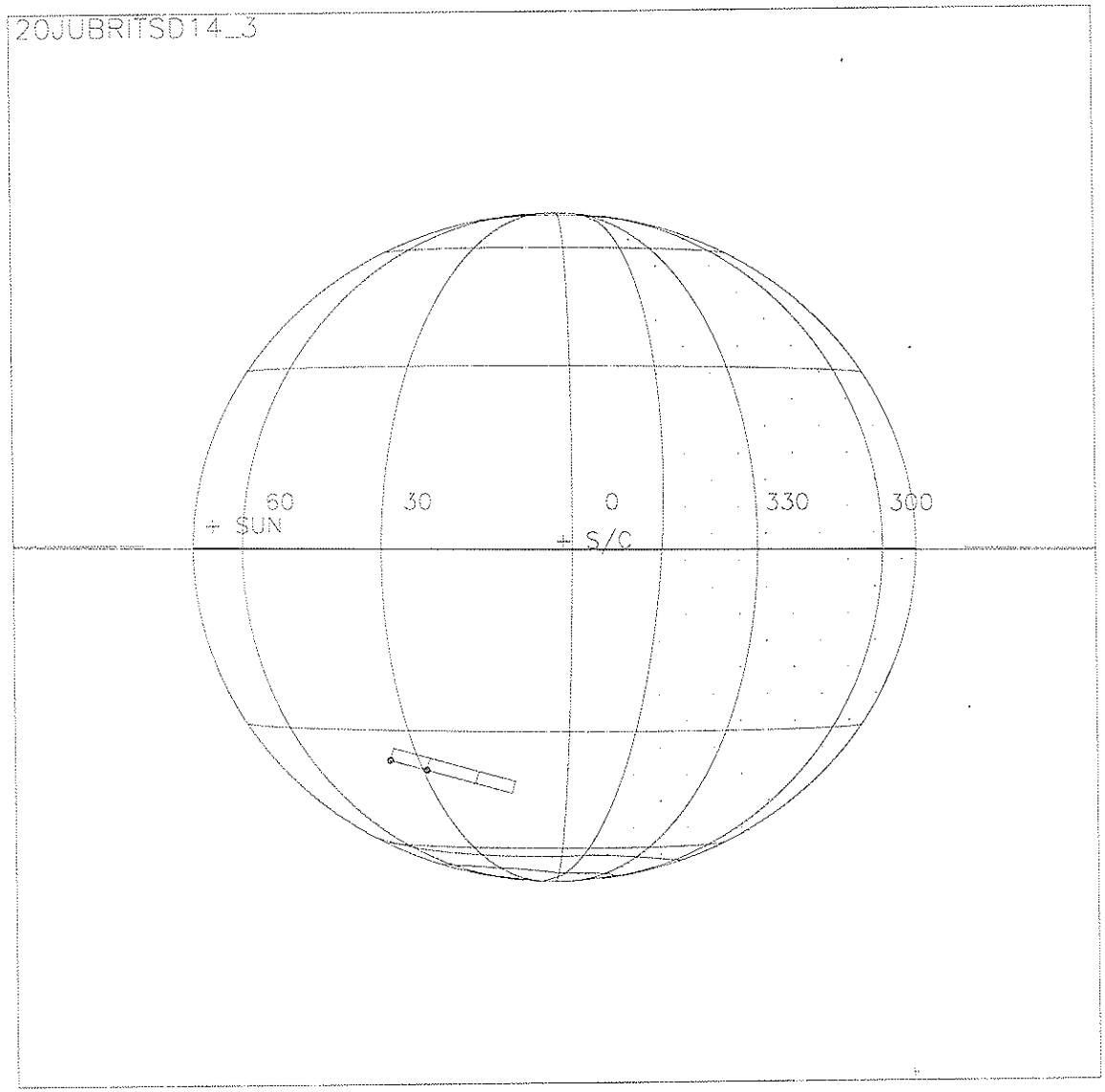

Start UTC_TIME : 1999-124 // 23:28:36.965
No End Time :
Start SCLK : 1/04981186:00:0:0

Target Body : JUPITER
Target Ra/Dec : 86.67/ 25.35 Deg
S/C to Body Center : 1434509. Km (20.065307 RJ)
Z-axis Pointing (Ra / Dec) : 198.35 / -3.06 Deg

Activity ID: Orbit 20 **OAPEL** JUBRITSD **SeqNo** 15-

Title Brightside hydrocarbons **Instrument** UVS

Requestor UVS-AWG/W. KENT TOBISKA **Team** UVS **Working Group** AWG

Time System CDS **Load ID** 20A **Calendar Date** 05/04/99 **Week** 70

Start	JEE+CDS 00001812:00:0	99-124/23:32:44.800	JEE+001/06:32:08.000
End	JEE+CDS 00001844:00:0	99-125/00:05:06.133	JEE+001/07:04:29.333
Duration	00000032:00:0	000/00:32:21.333	000/00:32:21.333

Top Label 20JUBRITSD15-

Bottom Label realtime

Plot Key UVS **Type** SCI

CDS Bytes 268 **Report Options** BOTH **Scan Platform** Yes

CDS Source OAP **Spin State** DUAL **DMS** No

Observation Objective

Observe brightside hydrocarbon emissions to develop a statistically significant acetylene and ammonia spectrum at four latitudes. This study will help understand minor species chemistry related to dynamics in Jupiter's stratosphere/upper troposphere. Low photon count rates require substantial integration time. This is a realtime observation for 6.13 hours during the feature track window using either a G/G 176 step miniscan covering 1496-1755 Å or a G/G full scan at a distance from Jupiter = 20.0 Rj. 4 observation latitudes are north high and mid lat, south mid and high lat. The lighting and view geometry is designed so that 1/mu + 1/mu_0 = 3.88.

MBTG = 0.017712; 27 RIMs integration time
south high latitude; full-scan G/G
GEM Objective Phase 2 - Jupiter atm. dynamics

Design Detail

```
PSID  CDS  RIM   COMMAND PARAMETERS
384EV 00   00:00 COMMNT UVS RIM 0
157BV 94   00:00  CMDRS PLAN_DUR = 32 RIMS; EST_UVS_CMDS = 6 (34UVS)
           01:00      1  UVG:07,SCAN,NORM,NORM,NORM,SAME,0,OFF,OFF,ON,ON,OFF,NOOVR,1,2C,9D,00,00
           07:00      7  OFF:C1,FIXED,NORM,NORM,NORM,SAME,0,OFF,OFF,ON,OFF,OFF,NOOVR,1,2C,05,00,00
           09:00      9  UVG:07,SCAN,NORM,NORM,NORM,SAME,0,OFF,OFF,ON,ON,OFF,NOOVR,1,2C,9D,00,00
           24:00     24  OFF:C1,FIXED,NORM,NORM,NORM,SAME,0,OFF,OFF,ON,OFF,OFF,NOOVR,1,2C,05,00,00
           26:00     26  UVG:07,SCAN,NORM,NORM,NORM,SAME,0,OFF,OFF,ON,ON,OFF,NOOVR,1,2C,9D,00,00
           32:00     32  OFF:C1,FIXED,NORM,NORM,NORM,SAME,0,OFF,OFF,ON,OFF,OFF,NOOVR,1,2C,05,00,00
349AX 28   00:69 UVFLSH DISCRD,UVS
165EF 27   01:00 TARGET Lat/Lon = -42/26.7 (RA/Dec = 87.69/23.57) [3.8874]
165EE 27   09:00 TARGET Lat/Lon = -42/31.5 (RA/Dec = 87.88/23.58) [3.8877]
117BE 37   11:00 CSMOS  #_strip=3; obs_slw_rt=0.02; repo_dur=0:46; strip_dur=3:45; cn_del_s=-1.6
165ED 27   26:00 TARGET Lat/Lon = -42/42.0 (RA/Dec = 88.28/23.59) [3.8855]
349AW 28   31:69 UVFLSH PACKET,UVS
```

Mon Apr 5 22:39:31 1999

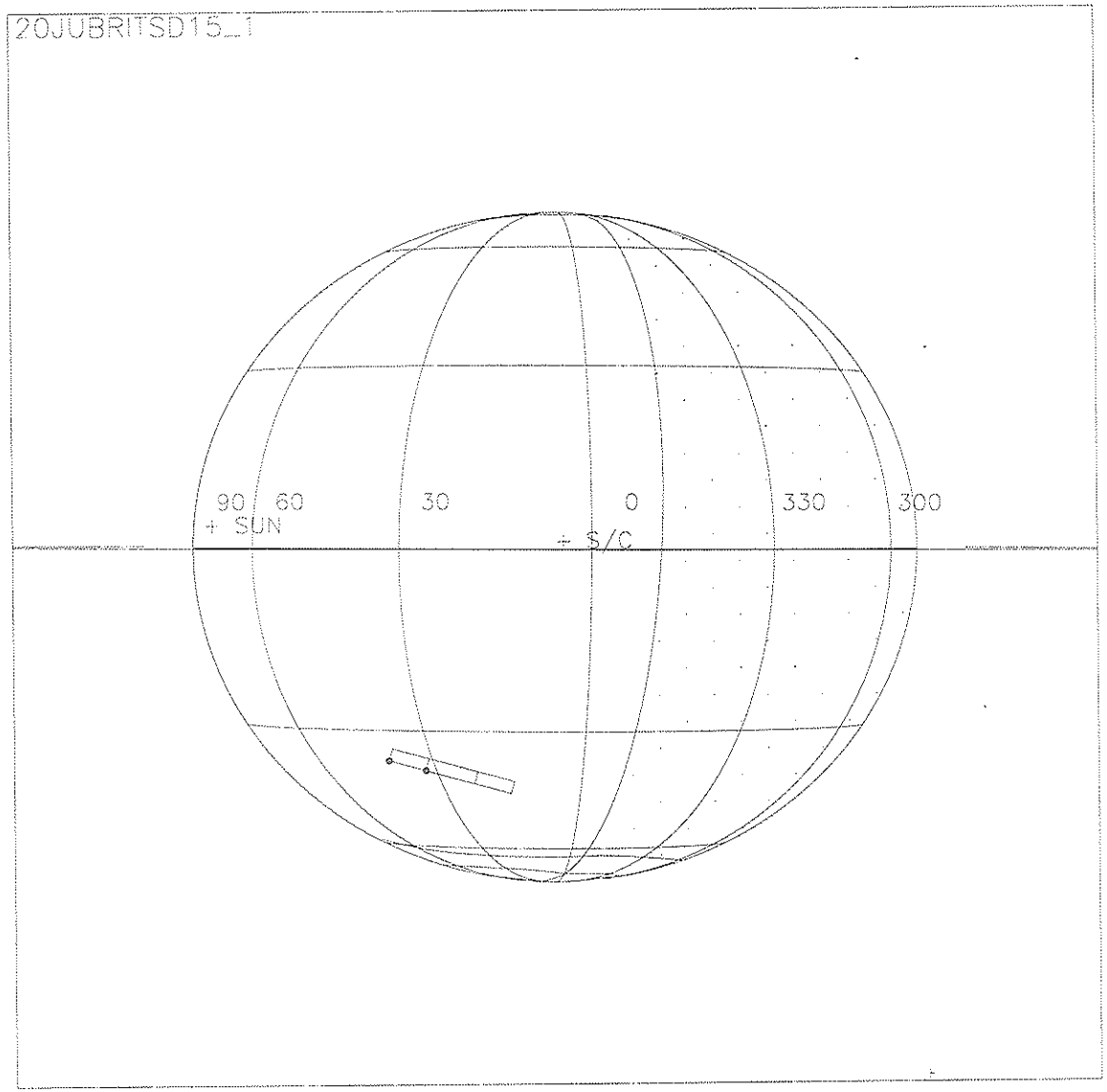

Start UTC_TIME : 1999-124 // 23:33:40.298
No End Time :
Start SCLK : 1/0498119 1:00:0:0

Target Body : JUPITER
Target Ra/Dec : 86.79/ 25.35 Deg
S/C to Body Center : 1437173. Km (20.102575 Rj)
Z-axis Pointing (Ra / Dec) : 198.35 / -3.06 Deg

Mon Apr 5 22:40:39 1999

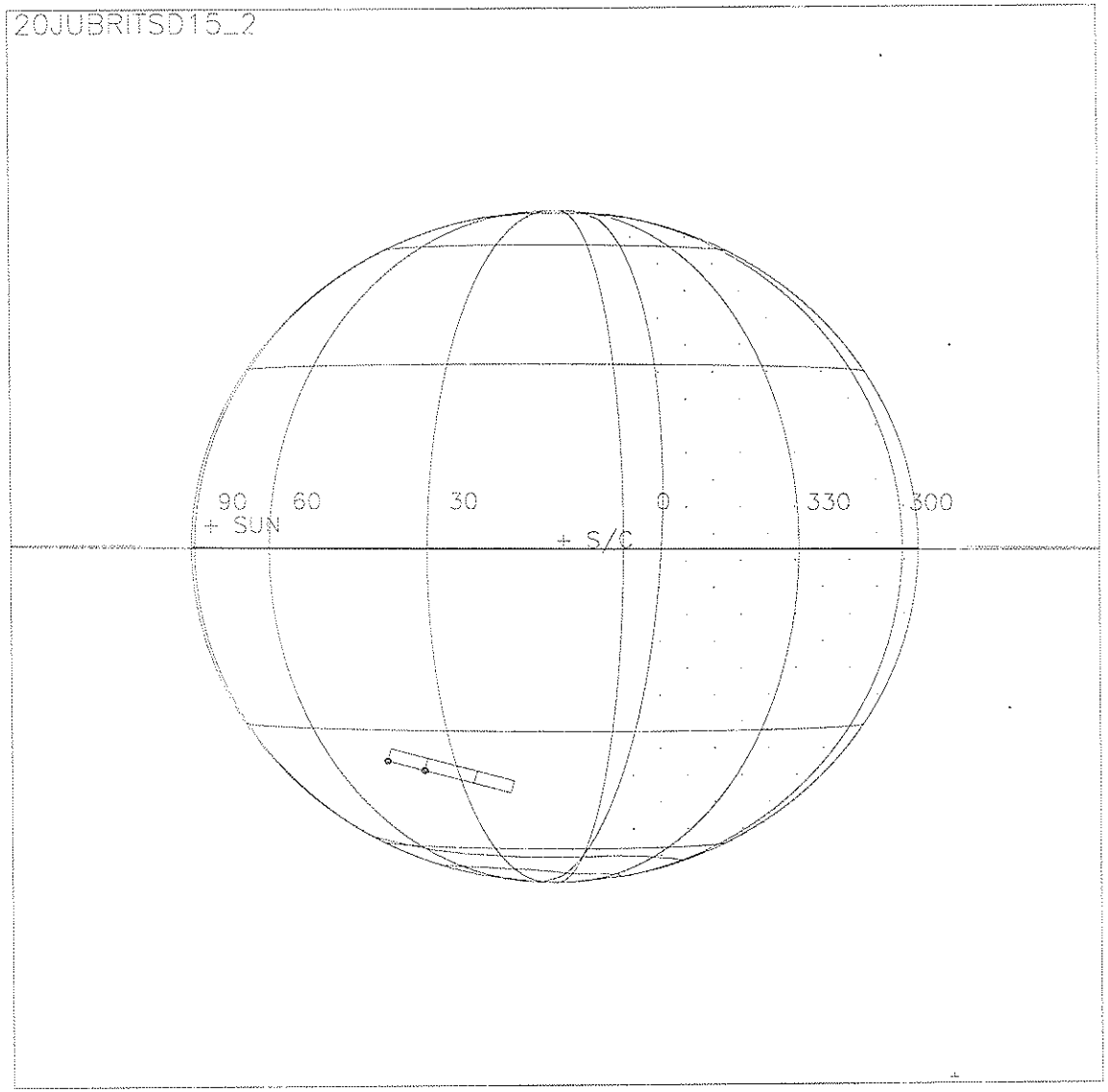

Start UTC_TIME : 1999-124 // 23:41:45.631
No End Time :
Start SCLK : 1/04981199:00:0:0

Target Body : JUPITER
Target Ra/Dec : 86.98/ 25.35 Deg
S/C to Body Center : 1441435. Km (20.162185 Rj)
Z-axis Pointing (Ra / Dec) : 198.35 / -3.06 Deg

Mon Apr 5 22:42:27 1999

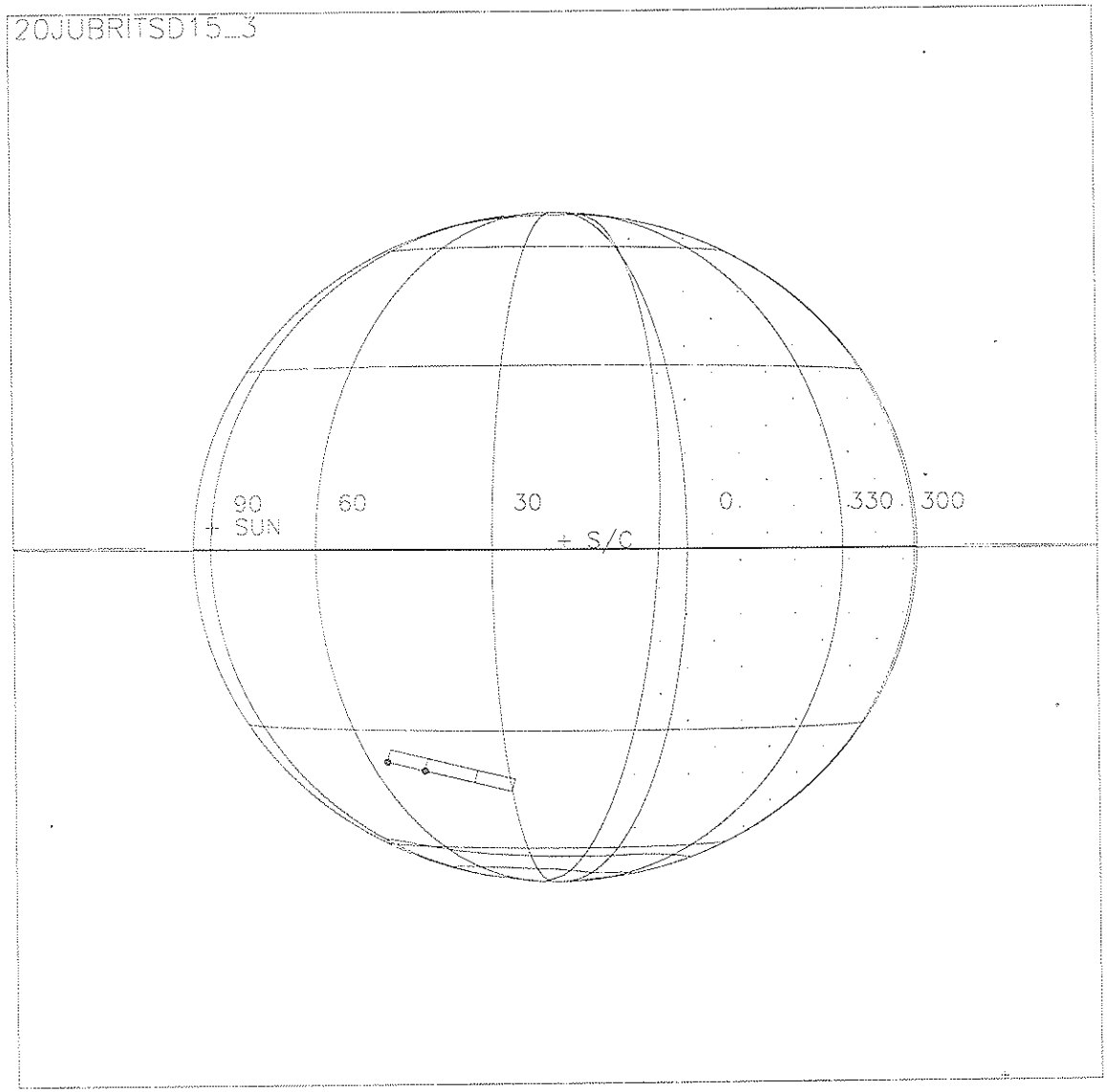

Start UTC_TIME : 1999-124 // 23:58:56.964
No End Time :
Start SCLK : 1/04981216:00:0:0

Target Body : JUPITER
Target Ra/Dec : 87.37/ 25.36 Deg
S/C to Body Center : 1450485. Km (20.288772 Rj)
Z-axis Pointing (Ra / Dec) : 198.35 / -3.05 Deg

Activity ID: Orbit 20 **OAPEL** JUAURORA **SeqNo** 01-

Title Aurora south **Instrument** UVS

Requestor UVS-AWG/W. KENT TOBISKA **Team** UVS **Working Group** AWG

Time System CDS **Load ID** 20A **Calendar Date** 05/05/99 **Week** 70

Start	JEE+CDS 00001912:00:0	99-125/01:13:51.466	JEE+001/08:13:14.666
End	JEE+CDS 00002006:00:0	99-125/02:48:54.133	JEE+001/09:48:17.333
Duration	00000094:00:0	000/01:35:02.667	000/01:35:02.667

Top Label 20JUAURORA01-

Bottom Label realtime

Plot Key UVS **Type** SCI

CDS Bytes 185 **Report Options** BOTH **Scan Platform** Yes

CDS Source OAP **Spin State** DUAL **DMS** No

Observation Objective

Jupiter aurora observations of Lyman-a and H2 emissions near the 80 (S) longitude. We will attempt to capture the Io fluxtube footprint (IFT) and any fluxtube that maps from Europa to Jupiter to understand long-term magnetosphere and Jovian upper atmosphere interaction. This is a realtime observation for 1.5 hours using G full-scans and extended N scans to suppress solar scattered light and boost H2 A-B ctm signal at a distance from Jupiter = 20.7 Rj. This is the same command used once in C3JUDRKNEW01.

MBTG = 0.035424

GEM Objective Phase 1 - Magnetospheric interactions

Design Detail

```
PSID   CDS   RIM   COMMAND PARAMETERS
384BT  00   00:00 COMMNT UVS RIM 0
157BT  38   01:00   CMDRS PLAN_DUR = 93 RIMS; EST_UVS_CMDS = 2 (34UVS)
            02:00       1   UVN:E7,FIXED,NORM,NORM,NORM,SAME,0,OFF,ON,ON,ON,OFF,NOOVR,1,00,9C,01,2C
            94:00      93   OFF:C1,FIXED,NORM,NORM,NORM,SAME,0,OFF,OFF,ON,OFF,OFF,NOOVR,1,2C,05,00,00
349AT  28   01:69 UVFLSH DISCRD,UVS
165OZ  54   02:00 TARGET Lat/Lon = -65/30; (RA/Dec = 88.28/23.01); no TMC
117GZ  37    02:00 CSMOS   #_strip=4;obs_slw_rt=0.01;repo_dur=11:46;strip_dur=11:45;cn_del_s=-4.5;
                 cone_del_r=-3.5
349AS  28   46:69 UVFLSH PACKET,UVS (1)
349BK  00   94:69 UVFLSH (20TV20NANS01 observation packets the data)
```

Mon Apr 5 22:48:22 1999

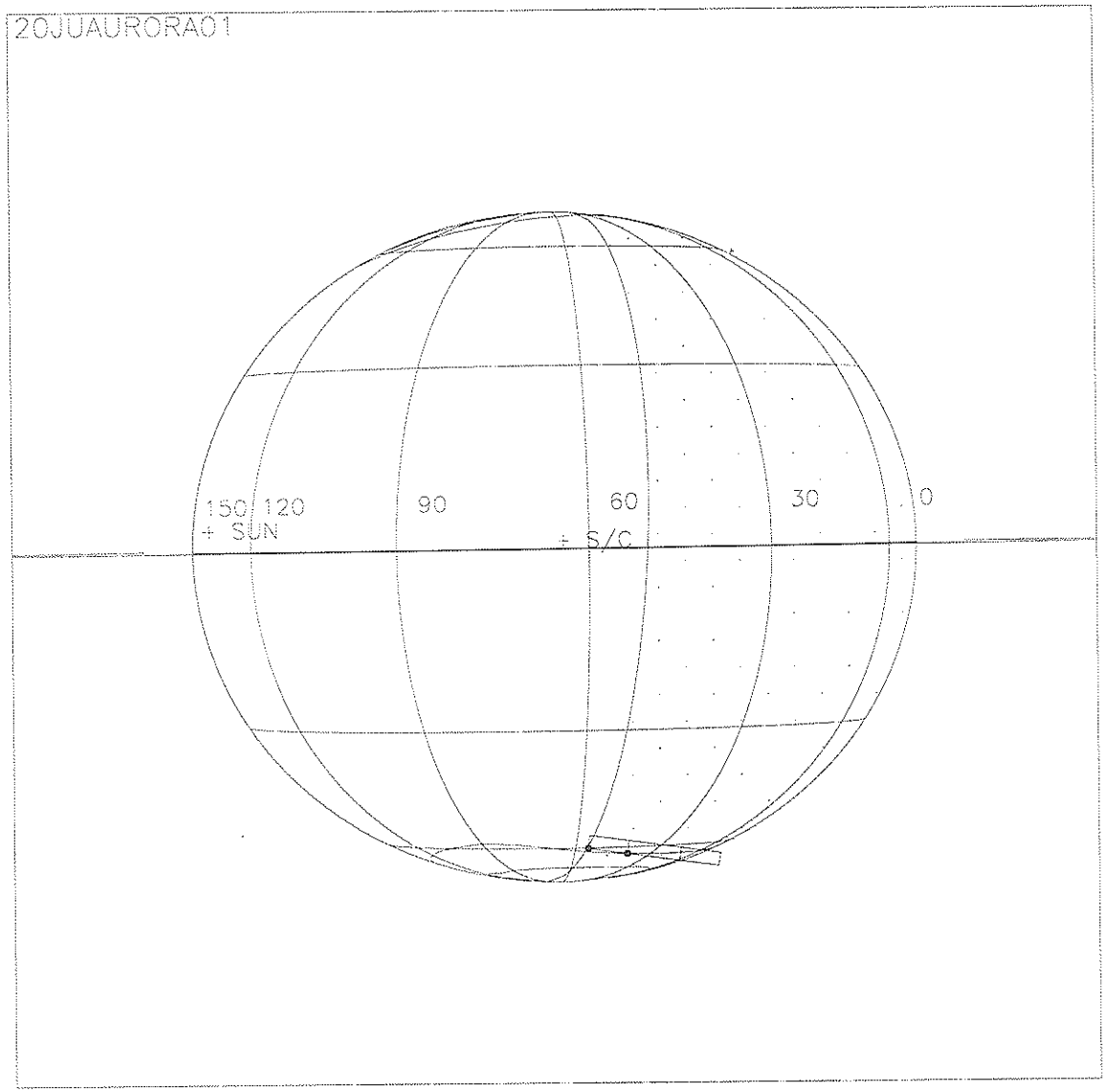

Start UTC_TIME : 1999-125 // 01:15:47.628
No End Time :
Start SCLK : 1/04981292:00:0:0

Target Body : JUPITER
Target Ra/Dec : 89.08/ 25.35 Deg
S/C to Body Center : 1490839. Km (20.853235 Rj)
Z-axis Pointing (Ra / Dec) : 198.35 / -3.06 Deg

Activity ID: Orbit 20 **OAPEL** HU_STARC **SeqNo** AL-

Title Star Calibration **Instrument** UVS

Requestor UVS-AWG/W. KENT TOBISKA **Team** UVS **Working Group** AWG

Time System CDS **Load ID** 20A **Calendar Date** 05/05/99 **Week** 70

Start	JEE+CDS 00002555:00:0	99-125/12:04:00.133	JEE+001/19:03:23.333
End	JEE+CDS 00002664:00:0	99-125/13:54:12.800	JEE+001/20:53:36.000
Duration	00000109:00:0	000/01:50:12.667	000/01:50:12.667

Top Label 20HU_STARCAL-

Bottom Label realtime

Plot Key UVS **Type** SCI

CDS Bytes 200 **Report Options** BOTH **Scan Platform** Yes

CDS Source OAP **Spin State** DUAL **DMS** No

Observation Objective

Star cross calibration between UVS and EUV on Lyman-alpha sky background and star calibration on Sirius at RA/Dec = 100.73/-16.659, type A061, mag -1.6. This is a realtime observation using F/N and F/G full scans at a distance from Jupiter = 25.4 Rj.

Sirius

MBTG = 0.035424
52 RIMs integration time each flush

GEM Objective Phase 1 - instrument calibration

[Ly-a flux (Tom Woods) = 20 ph cm-2 s-1 A-1] S/C RA/Dec = 192.9/-4.0

Design Detail

```
PSID   CDS   RIM   COMMAND PARAMETERS
384BS  00   00:00  COMMNT UVS RIM 0
157RS  52   03:00   CMDRS PLAN_DUR = 106 RIMS; EST_UVS_CMDS = 3 (34UVS)
            04:00       1   UVF:07,SCAN,NORM,NORM,NORM,SAME,0,ON,ON,OFF,ON,OFF,NOOVR,1,00,9C,01,2C
            56:00      53   UVF:07,SCAN,NORM,NORM,NORM,SAME,0,ON,OFF,ON,ON,OFF,NOOVR,1,00,9C,01,2C
           109:00     106   OFF:C1,FIXED,NORM,NORM,NORM,SAME,0,OFF,OFF,ON,OFF,OFF,NOOVR,1,2C,05,00,00
349AP  28   03:69  UVFLSH  DISCRD,UVS
165GY  27   04:00  TARGET  RA/Dec = 102.04/-16.48 (using cone_off=-21.5; x_cone_off=-5.0)
117GY  37   04:00  CSMOS   2 slews, 52 RIMs per slew & reposition; +-22 mrad box
349AO  28   55:69  UVFLSH  PACKET,UVS (1) F/N
349AN  28   108:69 UVFLSH  PACKET,UVS (2) F/G
```

[Note: can know slew rate accurately from SCANOPS; larger slew direction gets 100% of the slew rate and small slew direction gets proportional slew rate.]

Mon Apr 5 23:07:28 1999

Start UTC_TIME : 1999-125 // 12:07:57.604
No End Time :
Start SCLK : 1/04981937:00:0:0

Target Body : JUPITER
Target Ra/Dec : 100.56/ 24.80 Deg
S/C to Body Center : 1824792. Km (25.524426 Rj)
Z-axis Pointing (Ra / Dec) : 198.35 / -3.06 Deg