Activity ID: Orbit G1 **OAPEL** IUNTRLCL **SeqNo** 01-

Title UVS IO NEUTRAL CLOUD **Instrument** UVS

Requestor UVS-SWG/K.NAVIAUX 37740 **Team** UVS **Working Group** SWG

Time System CDS **Load ID** **Calendar Date** 06/26/96 **Week** 26

Start	JEE-CDS 00002356:00:0	96-178/08:49:09.600	JEE-001/15:42:10.666
End	JEE-CDS 00002141:00:0	96-178/12:26:32.933	JEE-001/12:04:47.333
Duration	00000215:00:0	000/03:37:23.333	000/03:37:23.333

Top Label G1IUNTRLCL01-

Bottom Label (real-time)

Plot Key	UVS	**Type**	SCI		
CDS Bytes	298	**Report Options**	BOTH	**Scan Platform**	Yes
CDS Source	OAP	**Spin State**	DUAL	**DMS**	No

Observation Objective

~4 hour UVS real-time Io Neutral Cloud observation. Determine the composition and time variation of the ionized Io neutral cloud (SO2, SO, O, S, K, Na) to assist in the modeling of the Io plasma torus and Io atmosphere.

Target s/p ~100000km off the satellite surface and allow s/c motion to drift the FOV across Io over a ~210 RIM period.

UVS Configuration = G/G 1-Step 2-Posn on 1304.3Å/1319.6Å
= F/G Full Scans On while on Io

Design Detail

```
CDS RIM Command Parameters                                  PSID
--- --- -------- ----------                                  ----
28  003+UVFLUSH DISCRD,UVS                                  (CQ)
66  003 CMDRS                                               (CI)
    004      1   34UVS,C1,F,N,N,N,S,0,OFF,OFF,  ON,  ON,NOOVR,1,9C,05,00,0A
    154      151 34UVS,07,S,N,N,N,S,0,  ON,OFF,  ON,  ON,NOOVR,1,00,9C,01,2C
    184      181 34UVS,C1,F,N,N,N,S,0,OFF,OFF,  ON,  ON,NOOVR,1,9C,05,00,0A
    214      211 34UVS,C1,F,N,N,N,S,0,OFF,OFF,  ON,OFF,NOOVR,1,2C,05,00,00
36  004 TARGET  (4 RIM Posn_Slew)                           (CI)
28  032+UVFLUSH PACKET,UVS                                  (CR)
28  062+UVFLUSH PACKET,UVS                                  (CS)
28  092+UVFLUSH PACKET,UVS                                  (CT)
28  122+UVFLUSH PACKET,UVS                                  (CU)
28  152+UVFLUSH PACKET,UVS                                  (CV)
28  182+UVFLUSH PACKET,UVS                                  (CW)
28  212+UVFLUSH PACKET,UVS                                  (CX)
```

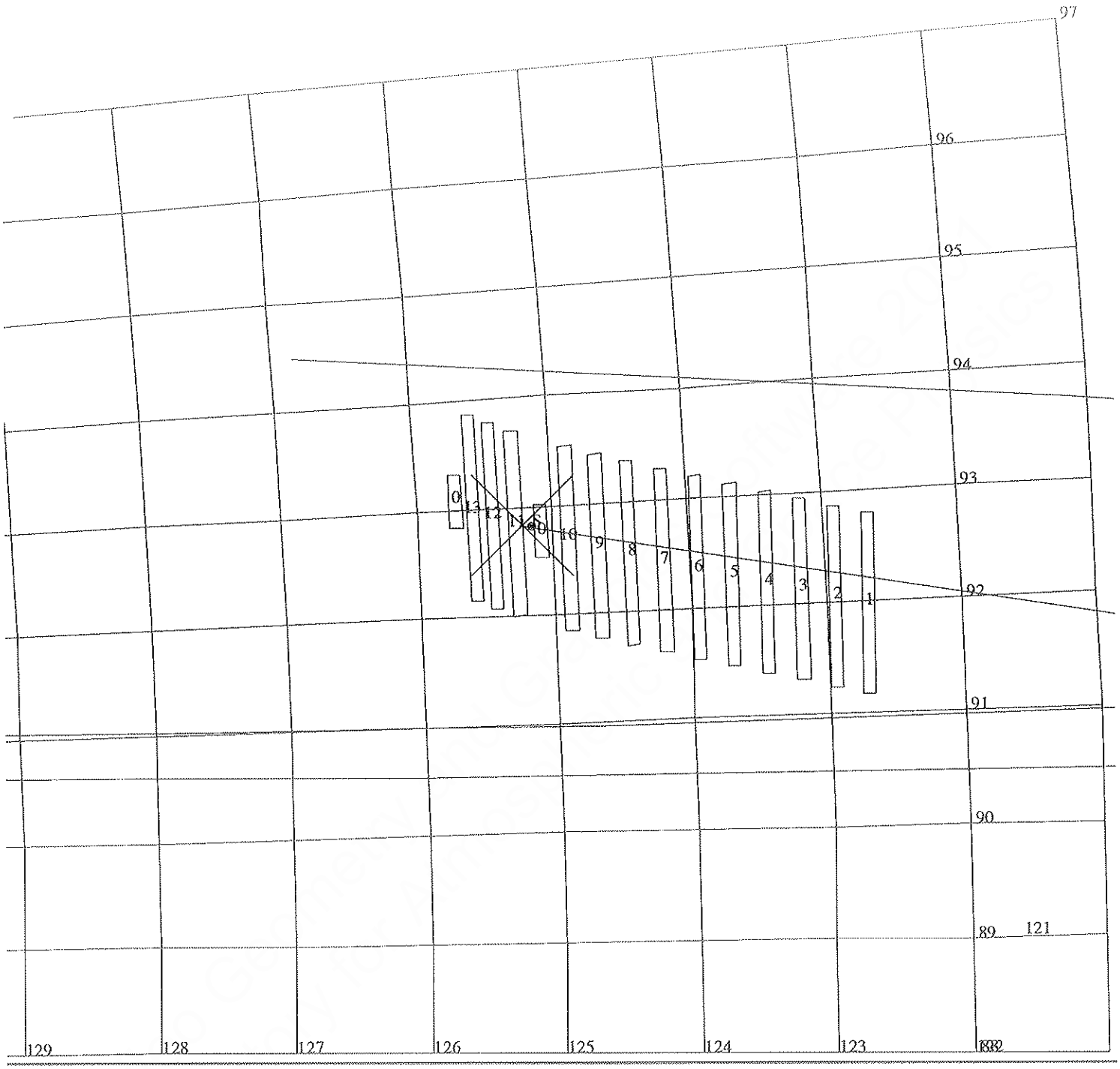

165CS:TT= 0 TMC= 1 C= -50.61 XC= -11.81 BS= 0/0768 TC= 9
A= 728 pD= 0 SR=17.430 RA50=224.95 DEC50=-15.30 cone=125.22 clock= 92.83

ESIGN G1.0 jaiel: 3/ 1/1996 10: 8:32

ILE:P.G1IUNTRLCL01

ARGET BODY : IO

INI:m.g1iuntrlcl99

: EPH:/DATA/NAVIO/T-960110-ALL.NS

ERIAPSIS: THINNING:NONE :UVS 1

TART:JEE 96-180/00:31:20.266 -CDS 2352:00:0 BODY PLOT TIME:96-178/11:35:59.600 D= 0 S= 0.020

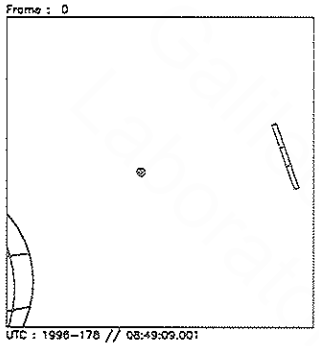

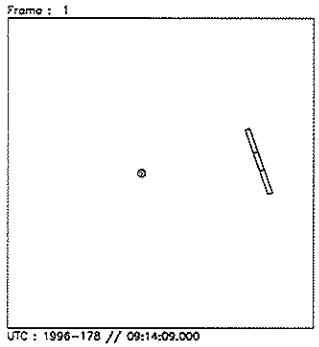

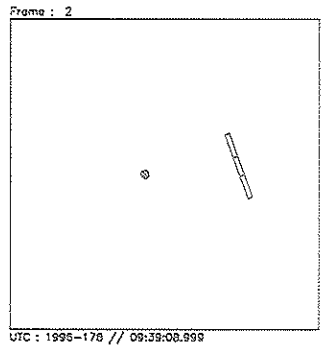

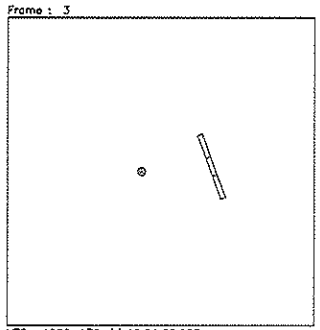

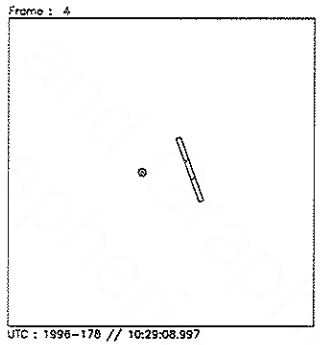

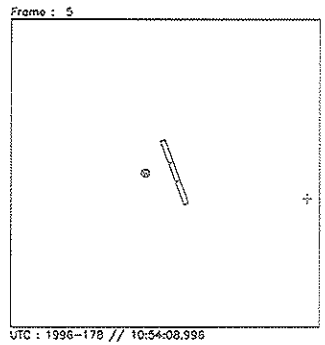

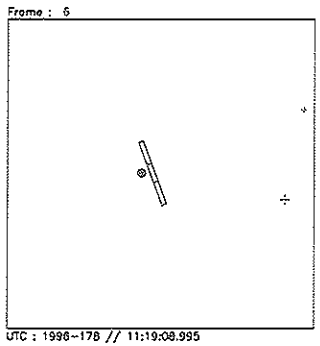

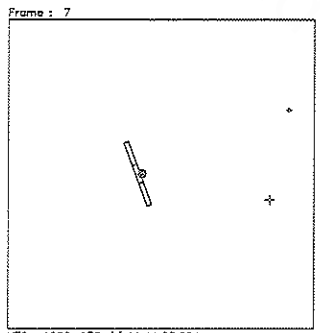

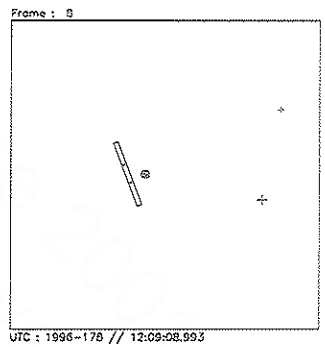

Start UTC_TIME : 1996-178 // 08:49:09.000
No End Time :
Start SCLK : 1/03496324:05:0:7

Target Body : IO
Target Cone/Clock : 128.21/ 93.72 Deg
S/C to Body Center : 1287277. Km (705.60866 Ri)
Z-axis Pointing (Ra / Dec) : 102.80 / 25.00 Deg

Frame : 0

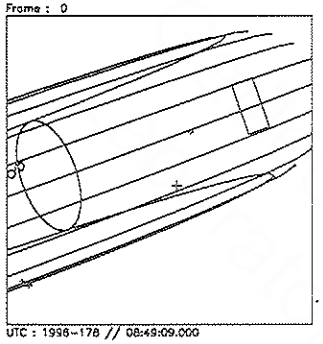

UTC : 1996-178 // 08:49:09.000
SCLK: 1/03496324:05:0:7

Frame : 1

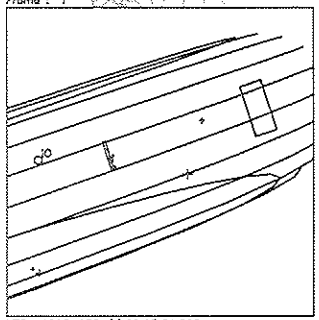

UTC : 1996-178 // 09:15:04.000
SCLK: 1/03496349:62:5:7

Frame : 2

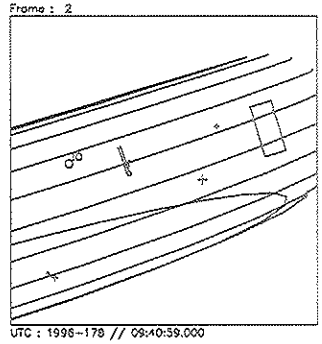

UTC : 1996-178 // 09:40:59.000
SCLK: 1/03496375:29:0:7

Frame : 3

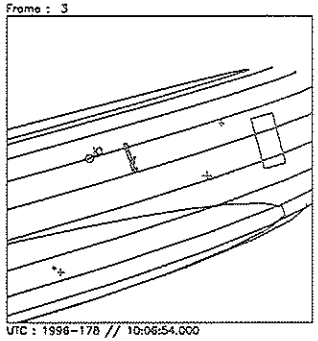

UTC : 1996-178 // 10:06:54.000
SCLK: 1/03496400:86:5:7

Frame : 4

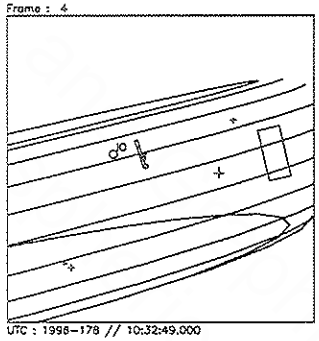

UTC : 1996-178 // 10:32:49.000
SCLK: 1/03496426:53:0:7

Frame : 5

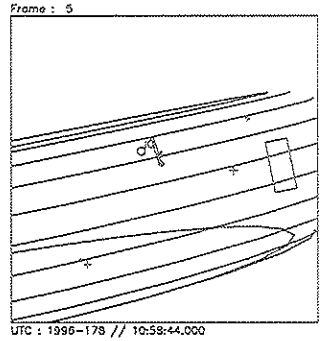

UTC : 1996-178 // 10:58:44.000
SCLK: 1/03496452:19:5:7

Frame : 6

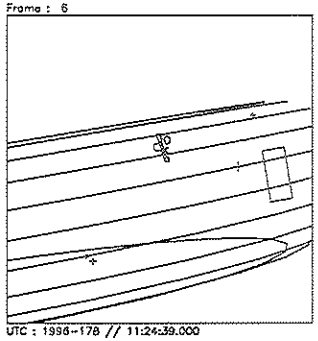

UTC : 1996-178 // 11:24:39.000
SCLK: 1/03496477:77:1:0

Frame : 7

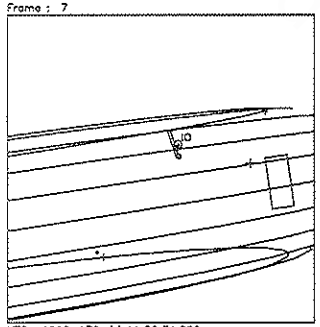

UTC : 1996-178 // 11:50:34.000
SCLK: 1/03496503:43:6:0

Frame : 8

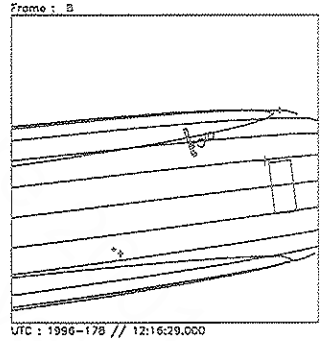

UTC : 1996-178 // 12:16:29.000
SCLK: 1/03496529:10:1:0

Start UTC_TIME : 1996-178 // 08:49:09.000
End UTC_TIME : 1996-178 // 12:26:32.000
Start SCLK : 1/03496324:05:0:7
Delta Time between FOV : 1555.000
FOVs : F Channel(0.1x0.4), N/G Channel(0.1x1.0)

Target Body : JUPITER
Target Cone/Clock : 133.44/ 92.81 Deg
S/C to Body Center : 1688316. Km (23.615453 Rj)
Z-axis Pointing (Ra / Dec) : 102.80 / 25.00 Deg

Activity ID: Orbit G1 **OAPEL** GUGLOBAL **SeqNo** 01+

Title UVS NIMS GANYMEDE GLOBAL RIDE-ALONG **Instrument** UVS

Requestor UVS-SWG/K.NAVIAUX 37740 **Team** UVS **Working Group** SWG

Time System CDS **Load ID** G1A **Calendar Date** 06/26/96 **Week** 26

Start	GEE-CDS 00000534:00:0	96-178/21:29:30.933	GEE-000/08:59:56.000
End	GEE-CDS 00000491:00:0	96-178/22:12:59.600	GEE-000/08:16:27.333
Duration	00000043:00:0	000/00:43:28.667	000/00:43:28.667

Top Label G1GUGLOBAL01+

Bottom Label (ride-along)

Plot Key	UVS	**Type**	SCI		
CDS Bytes	38	**Report Options**	BOTH	**Scan Platform**	No
CDS Source	OAP	**Spin State**	DUAL	**DMS**	No

Observation Objective

Ride-along w/ NIMS Ganymede Global observation (map of full satellite disk). Extend the surface scattering property measurements into the ultraviolet (1600Å - 3200Å) in concert with NIMS measurements to infer information about particle size, and refractive and absorption properties of the surface materials.

UVS Configuration = F/F Full Scans

PB Mbits = (38 RIMs)(1008 bps) = 2.324 Mbits

Design Detail

```
CDS RIM Command Parameters                          PSID
--- --- ------- ----------                          ----
38  003 CMDRS                                       (CM)
    004     1   34UVS,07,S,N,N,N,S,0,  ON,OFF,OFF,  ON,OFF,NOOVR,1,00,9C,00,00
    042    39   34UVS,C1,F,N,N,N,S,0,OFF,OFF,  ON,OFF,OFF,NOOVR,1,2C,05,00,00
```

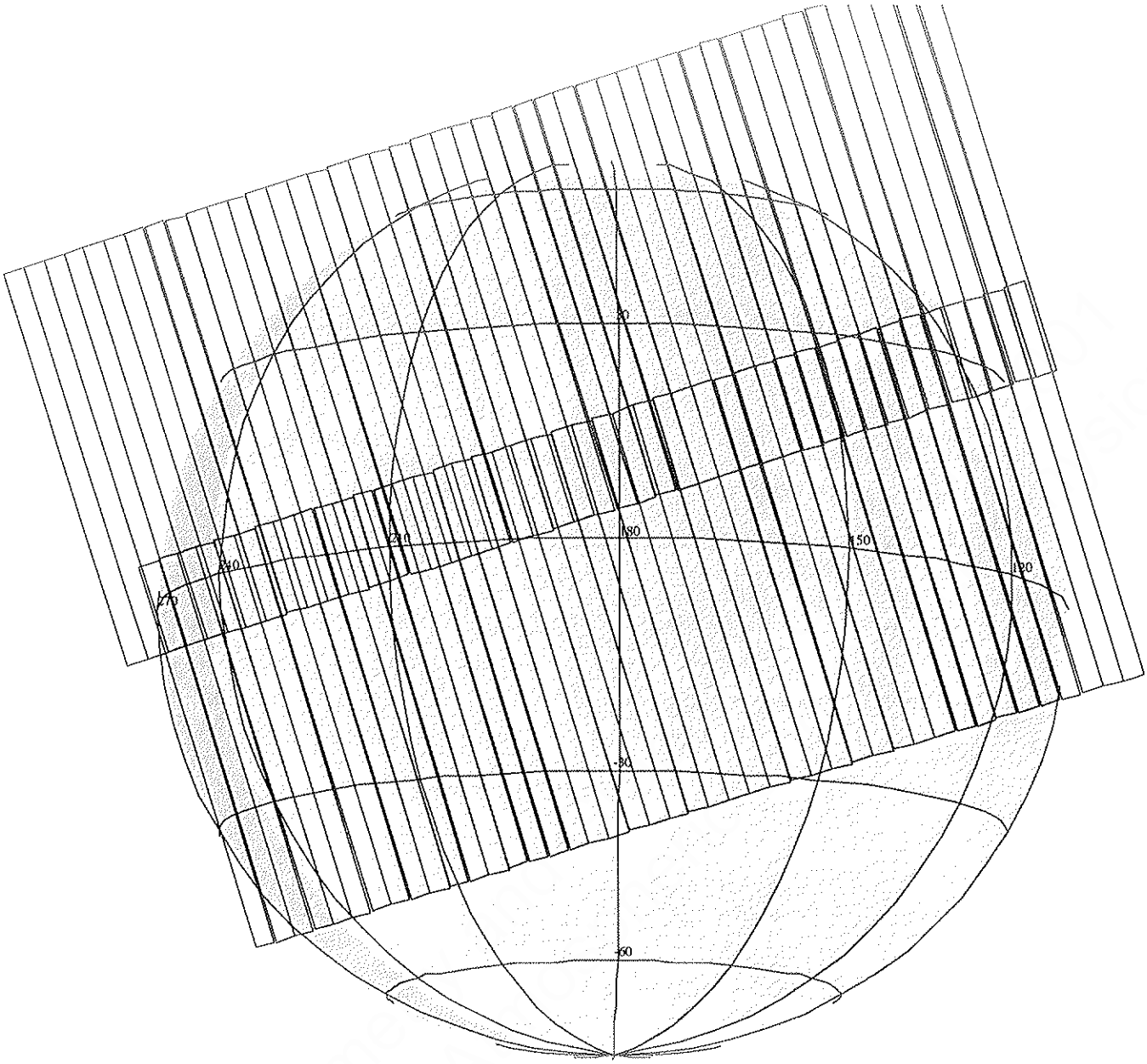

165DI:TT= 0 TMC= 1 C= -11.50 XC= 7.35 BS= 0/7629 TC= 3
A= 728 pD= 0 SR=17.450 RA50=252.01 DEC50=-14.83 cone=149.41 clock=107.90
117DI:#SB= 1 OR= 0.030 RR= 7.000 BM=F RC= 1 BS= 0/7629
1:#s= 2 Cs= 23.00 XCs= 0.00 Cr= -23.10 XCr= -7.50 sD= 2306 rD= 22

ESIGN G1.0 brad : 3/28/1996 11:11:24

ILE:P.G1GNGLOBAL01

ARGET BODY : GANYMEDE

INI:m.G1GNGLOBAL01

: EPH:/DATA/NAVIO/T-960110-ALL.NS

ERIAPSIS: THINNING:NIM 2

TART:GEE 96-179/06:29:26.933 -CDS 530:00:0 BODY PLOT TIME:TARGET-TIME D= 0 S= 0.700

Frame : 0

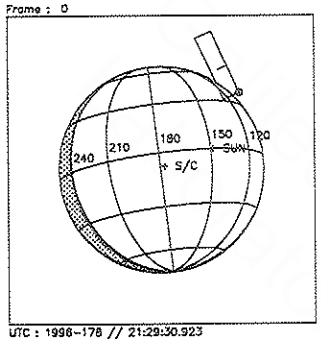

UTC : 1996-178 // 21:29:30.923
SCLK: 1/03497076:06:0:1

Frame : 1

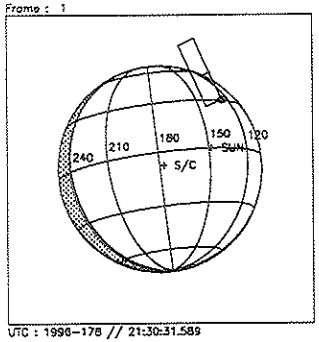

UTC : 1996-178 // 21:30:31.589
SCLK: 1/03497077:06:0:1

Frame : 2

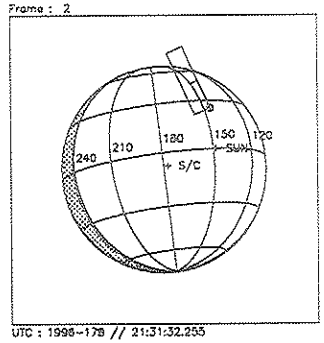

UTC : 1996-178 // 21:31:32.255
SCLK: 1/03497078:06:0:1

Frame : 3

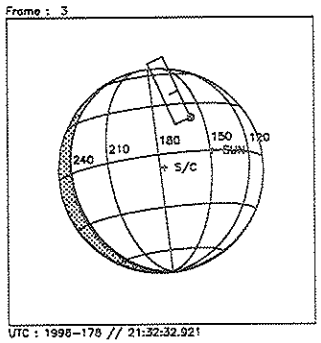

UTC : 1996-178 // 21:32:32.921
SCLK: 1/03497079:06:0:1

Frame : 4

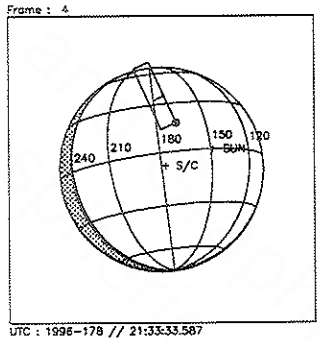

UTC : 1996-178 // 21:33:33.587
SCLK: 1/03497080:06:0:1

Frame : 5

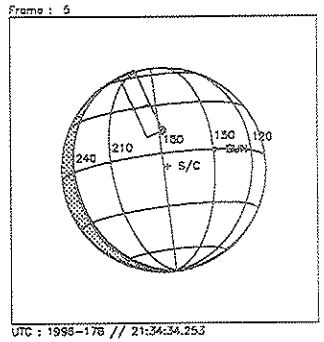

UTC : 1996-178 // 21:34:34.253
SCLK: 1/03497081:06:0:1

Frame : 6

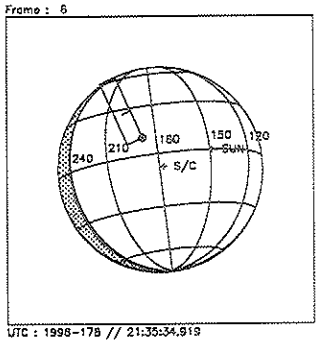

UTC : 1996-178 // 21:35:34.919
SCLK: 1/03497082:06:0:1

Frame : 7

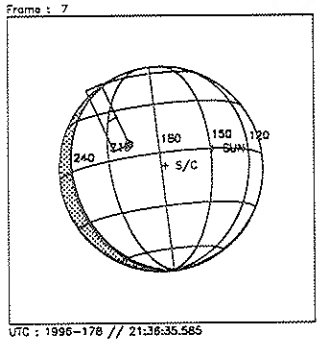

UTC : 1996-178 // 21:36:35.585
SCLK: 1/03497083:06:0:1

Frame : 8

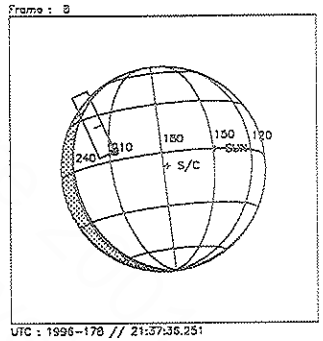

UTC : 1996-178 // 21:37:36.251
SCLK: 1/03497084:06:0:1

Start UTC_TIME : 1996-178 // 21:29:30.923
End UTC_TIME : 1996-178 // 22:12:59.600
Start SCLK : 1/03497076:06:0:1
Delta Time between FOV : 60.66600
FOVs : F Channel(0.1x0.4)

Target Body : GANYMEDE
Target Cone/Clock : 150.06/106.99 Deg
S/C to Body Center : 248205.0 Km (94.231202 Rg)
Z-axis Pointing (Ra / Dec) : 102.80 / 24.96 Deg

Frame : 9

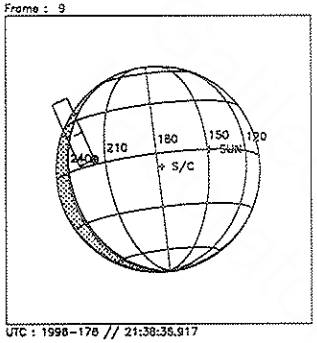

UTC : 1996-178 // 21:38:36.917
SCLK: 1/03497085:06:0:0

Frame : 10

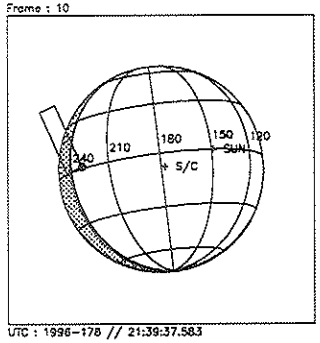

UTC : 1996-178 // 21:39:37.583
SCLK: 1/03497086:06:0:0

Frame : 11

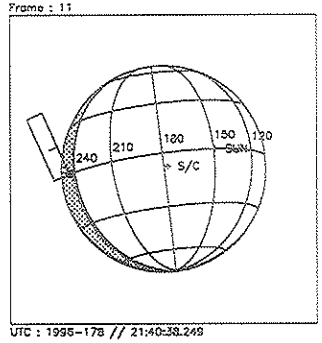

UTC : 1996-178 // 21:40:38.249
SCLK: 1/03497087:06:0:0

Frame : 12

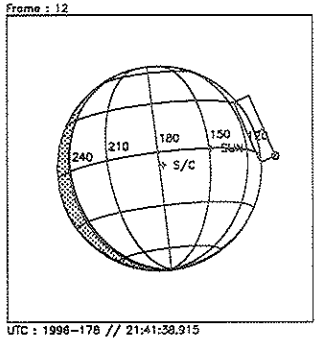

UTC : 1996-178 // 21:41:38.915
SCLK: 1/03497088:06:0:0

Frame : 13

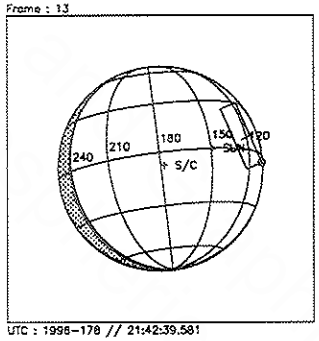

UTC : 1996-178 // 21:42:39.581
SCLK: 1/03497089:06:0:0

Frame : 14

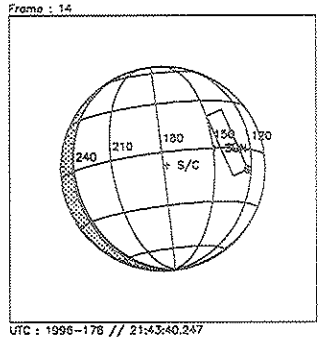

UTC : 1996-178 // 21:43:40.247
SCLK: 1/03497090:06:0:0

Frame : 15

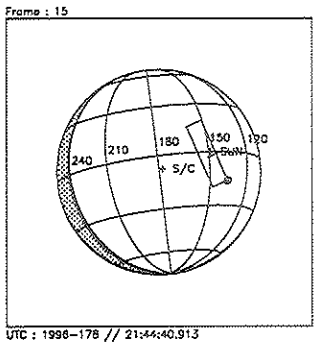

UTC : 1996-178 // 21:44:40.913
SCLK: 1/03497091:06:0:0

Frame : 16

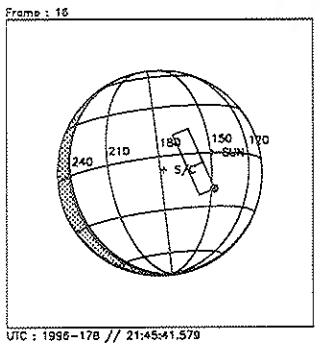

UTC : 1996-178 // 21:45:41.579
SCLK: 1/03497092:06:0:0

Frame : 17

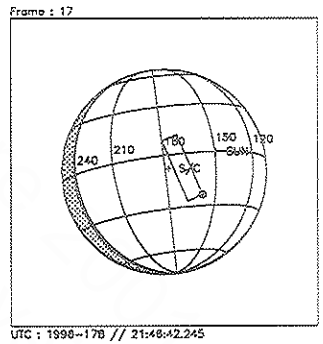

UTC : 1996-178 // 21:46:42.245
SCLK: 1/03497093:06:0:0

Start UTC_TIME : 1996-178 // 21:29:30.923
End UTC_TIME : 1996-178 // 22:12:59.600
Start SCLK : 1/03497076:06:0:1
Delta Time between FOV : 60.66600
FOVs : F Channel(0.1x0.4)

Target Body : GANYMEDE
Target Cone/Clock : 150.08/107.05 Deg
S/C to Body Center : 243808.0 Km (92.561896 Rg)
Z-axis Pointing (Ra / Dec) : 102.79 / 24.99 Deg

Frame : 18

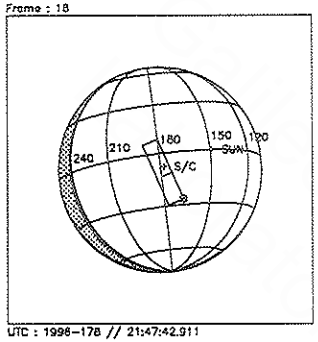

UTC : 1996-178 // 21:47:42.911
SCLK: 1/03497094:06:0:0

Frame : 19

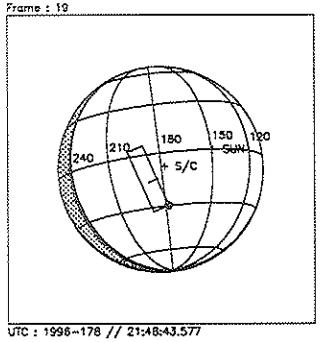

UTC : 1996-178 // 21:48:43.577
SCLK: 1/03497095:06:0:0

Frame : 20

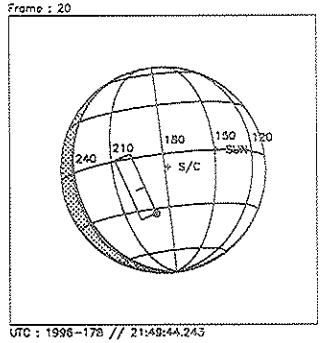

UTC : 1996-178 // 21:49:44.243
SCLK: 1/03497096:06:0:0

Frame : 21

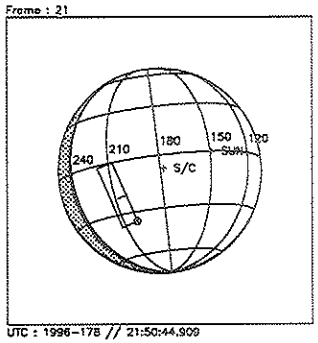

UTC : 1996-178 // 21:50:44.909
SCLK: 1/03497097:06:0:0

Frame : 22

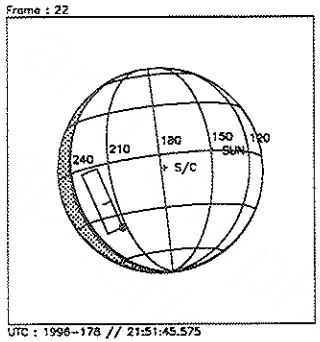

UTC : 1996-178 // 21:51:45.575
SCLK: 1/03497098:05:9:7

Frame : 23

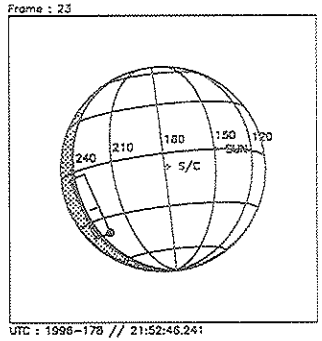

UTC : 1996-178 // 21:52:46.241
SCLK: 1/03497099:05:9:7

Frame : 24

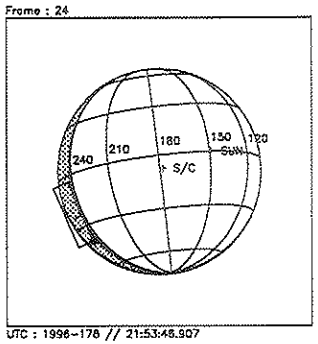

UTC : 1996-178 // 21:53:46.907
SCLK: 1/03497100:05:9:7

Frame : 25

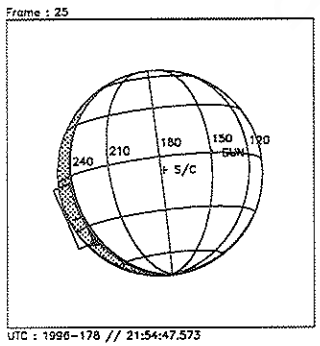

UTC : 1996-178 // 21:54:47.573
SCLK: 1/03497101:05:9:7

Frame : 25

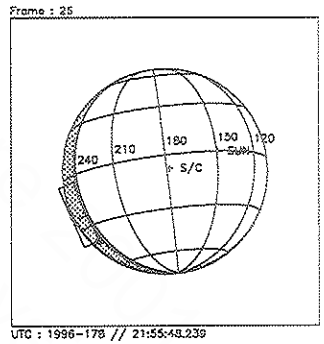

UTC : 1996-178 // 21:55:48.239
SCLK: 1/03497102:05:9:7

Start UTC_TIME : 1996-178 // 21:29:30.923
End UTC_TIME : 1996-178 // 22:12:59.600
Start SCLK : 1/03497076:06:0:1
Delta Time between FOV : 60.66600
FOVs : F Channel(0.1x0.4)

Target Body : GANYMEDE
Target Cone/Clock : 150.09/107.06 Deg
S/C to Body Center : 239421.8 Km (90.896645 Rg)
Z-axis Pointing (Ra / Dec) : 102.78 / 24.98 Deg

Frame : 27

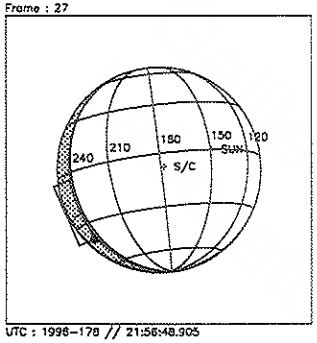

UTC : 1996-178 // 21:56:48.905
SCLK: 1/03497103:05:9:7

Frame : 28

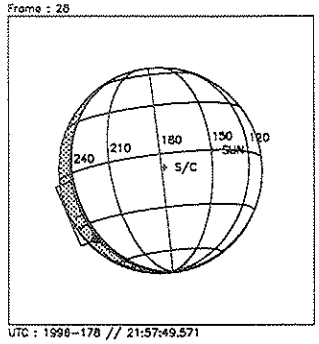

UTC : 1996-178 // 21:57:49.571
SCLK: 1/03497104:05:9:7

Frame : 29

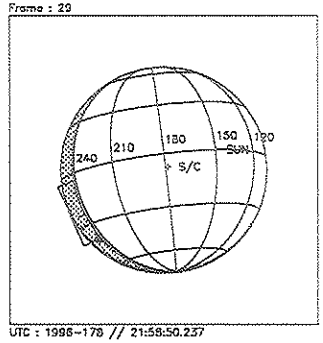

UTC : 1996-178 // 21:58:50.237
SCLK: 1/03497105:05:9:7

Frame : 30

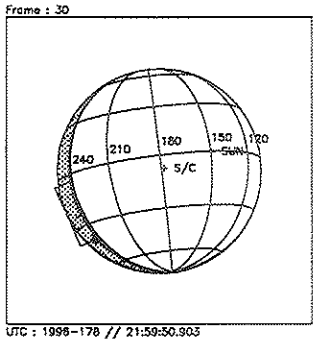

UTC : 1996-178 // 21:59:50.903
SCLK: 1/03497106:05:9:7

Frame : 31

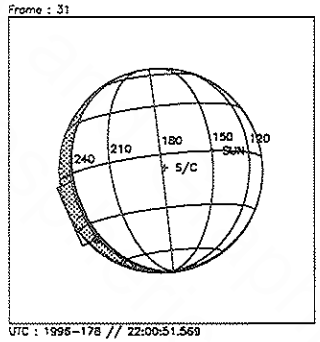

UTC : 1996-178 // 22:00:51.569
SCLK: 1/03497107:05:9:7

Frame : 32

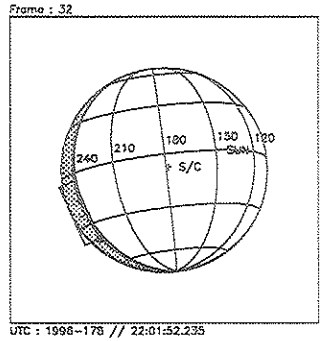

UTC : 1996-178 // 22:01:52.235
SCLK: 1/03497108:05:9:7

Frame : 33

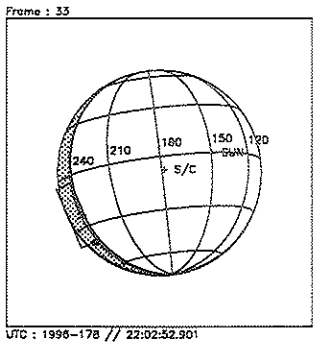

UTC : 1996-178 // 22:02:52.901
SCLK: 1/03497109:05:9:7

Frame : 34

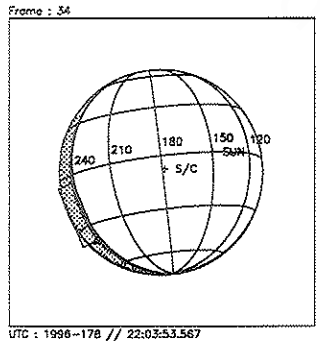

UTC : 1996-178 // 22:03:53.567
SCLK: 1/03497110:05:9:7

Frame : 35

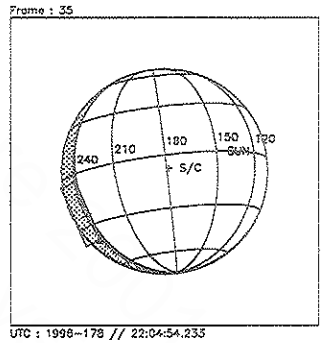

UTC : 1996-178 // 22:04:54.233
SCLK: 1/03497111:05:9:7

Start UTC_TIME : 1996-178 // 21:29:30.923
End UTC_TIME : 1996-178 // 22:12:59.600
Start SCLK : 1/03497076:06:0:1
Delta Time between FOV : 60.66600
FOVs : F Channel(0.1x0.4)

Target Body : GANYMEDE
Target Cone/Clock : 150.08/107.10 Deg
S/C to Body Center : 235046.0 Km (89.235394 Rg)
Z-axis Pointing (Ra / Dec) : 102.80 / 25.00 Deg

Frame : 36

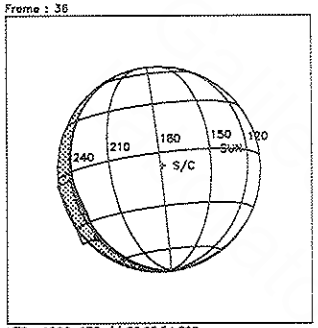

UTC : 1996-178 // 22:05:54.899
SCLK: 1/03497112:05:9:6

Frame : 37

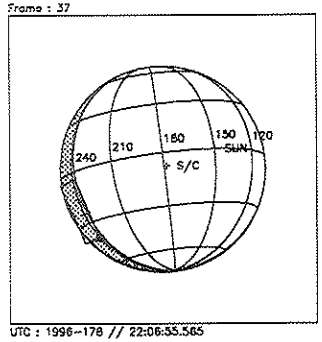

UTC : 1996-178 // 22:06:55.565
SCLK: 1/03497113:05:9:6

Frame : 38

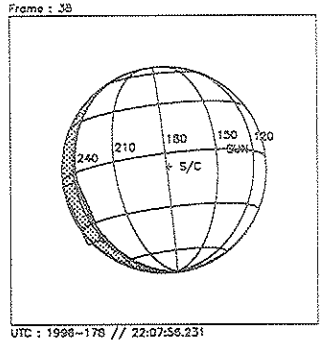

UTC : 1996-178 // 22:07:56.231
SCLK: 1/03497114:05:9:6

Frame : 39

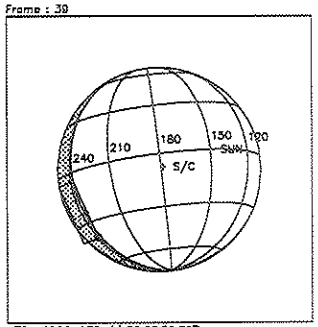

UTC : 1996-178 // 22:08:56.897
SCLK: 1/03497115:05:9:6

Sample Plot Graphics Output for Atmospheric Chemistry Branch

Start UTC_TIME : 1996-178 // 21:29:30.923
End UTC_TIME : 1996-178 // 22:12:59.600
Start SCLK : 1/03497076:06:0:1
Delta Time between FOV : 60.66600
FOVs : F Channel(0.1x0.4)

Target Body : GANYMEDE
Target Cone/Clock : 150.09/107.11 Deg
S/C to Body Center : 230680.7 Km (87.578090 Rg)
Z-axis Pointing (Ra / Dec) : 102.80 / 25.00 Deg

Activity ID: Orbit G1 **OAPEL** GUMEMPIS **SeqNo** 01+

Title UVS NIMS GANYMEDE MEMPIS RIDE-ALONG **Instrument** UVS

Requestor UVS-SWG/K.NAVIAUX 37740 **Team** UVS **Working Group** SWG

Time System CDS **Load ID** G1A **Calendar Date** 06/27/96 **Week** 26

Start	GTE-CDS 00000194:00:0	96-179/03:13:17.600	GTE-000/03:16:09.333
End	GTE-CDS 00000180:00:0	96-179/03:27:26.933	GTE-000/03:02:00.000
Duration	00000014:00:0	000/00:14:09.333	000/00:14:09.333

Top Label G1GUMEMPIS01+

Bottom Label (ride-along)

Plot Key UVS **Type** SCI

CDS Bytes 38 **Report Options** BOTH **Scan Platform** No

CDS Source OAP **Spin State** DUAL **DMS** No

Observation Objective

Ride-Along with NIMS Ganymede Mempis Facula Observation (palimpsest w/ surrounding dark terrain and furrow structure). Extend the surface scattering property measurments into the ultraviolet (1600Å - 3200Å) in concert with NIMS measurements to infer information abou;particle size, and refractive and absorption properties of the surface materials.

UVS Configuration = F/F Full Scans

PB Mbits = (8 RIMs)(1008 bps) = 0.489 Mbits

Design Detail

```
CDS RIM Command Parameters                                  PSID
--- --- -------- ----------                                 ----
38  004 CMDRS                                              (CN)
    005     1    34UVS,07,S,N,N,N,S,0,  ON,OFF,OFF,  ON,OFF,NOOVR,1,00,9C,00,00
    013     9    34UVS,C1,F,N,N,N,S,0,OFF,OFF,  ON,OFF,OFF,NOOVR,1,2C,05,00,00
```

(cone, clock)

Wed Apr 10 15:02:30 1996

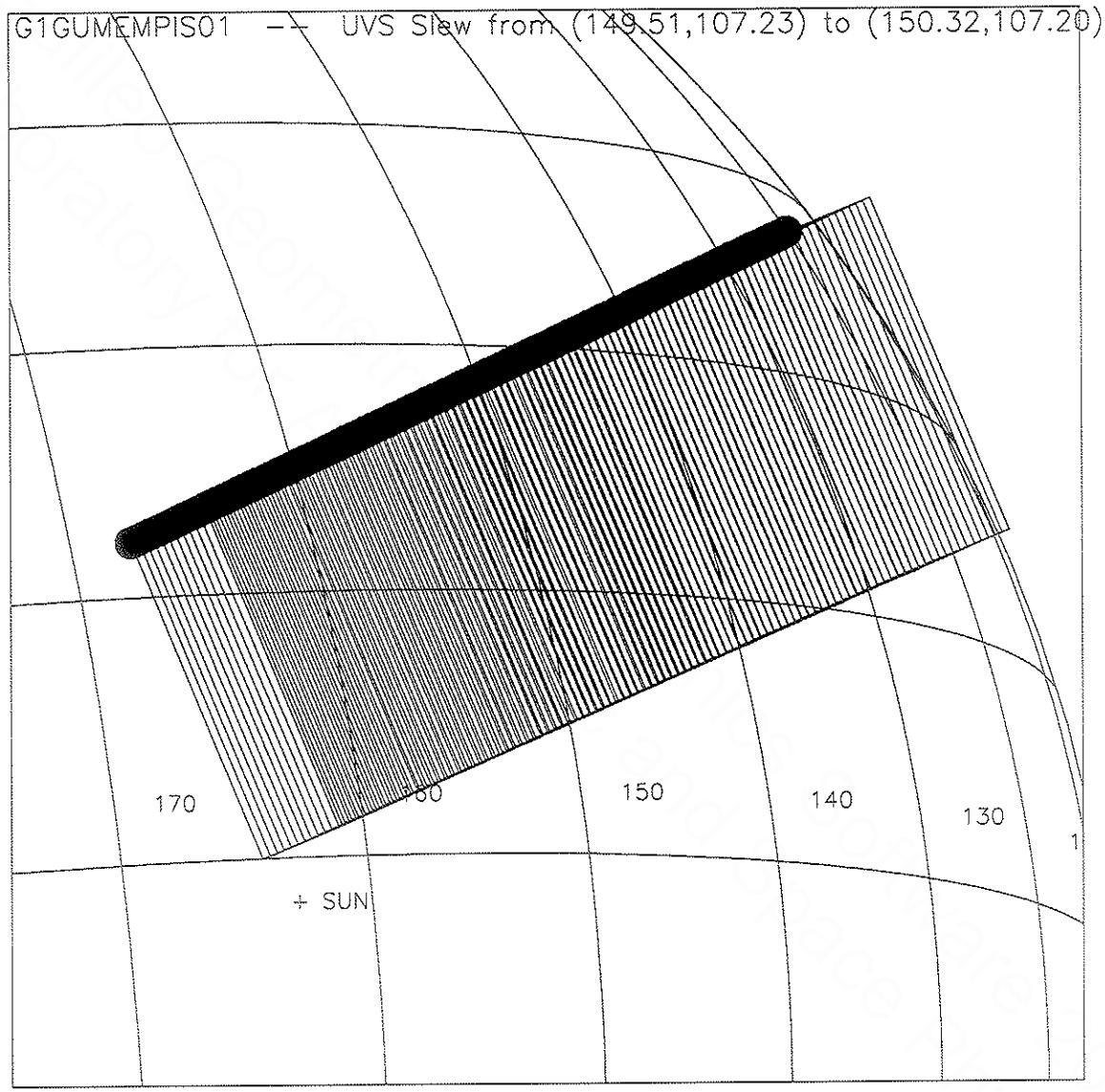

Start UTC_TIME : 1996-179 // 03:14:17.000
No End Time :
Start SCLK : 1/03497417:04:1:4

Target Body : GANYMEDE
Target Cone/Clock : 151.20/106.81 Deg
S/C to Body Center : 87750.27 Km (33.314453 Rg)
Z-axis Pointing (Ra / Dec) : 102.80 / 25.00 Deg

The UVS Slew in this observation lasts for just over 8 minutes. This pic covers that 8 minutes with a resolution of 5 seconds per FOV. This produces 98 complete spectra over the course of the observation. (F-channel only)

Activity ID: Orbit G1 **OAPEL** GUAMON__ **SeqNo** 01+

Title UVS NIMS GANYMEDE AMON RIDE-ALONG **Instrument** UVS

Requestor UVS-SWG/K.NAVIAUX 37740 **Team** UVS **Working Group** SWG

Time System CDS **Load ID** **Calendar Date** 06/27/96 **Week** 26

Start	GTE-CDS 00000089:00:0	96-179/04:59:27.600	GTE-000/01:29:59.333
End	GTE-CDS 00000080:00:0	96-179/05:08:33.600	GTE-000/01:20:53.333
Duration	00000009:00:0	000/00:09:06.000	000/00:09:06.000

Top Label G1GUAMON__01+

Bottom Label (ride-along)

Plot Key	UVS	**Type**	SCI		
CDS Bytes	38	**Report Options**	BOTH	**Scan Platform**	No
CDS Source	OAP	**Spin State**	DUAL	**DMS**	No

Observation Objective

Ride-Along with NIMS Ganymede Amon Crater Observation (bright ray crater & grooved terrain). Extend the surface scattering property measurments into the ultraviolet (1600Å - 3200Å) in concert with NIMS measurements to infer information abou;particle size, and refractive and absorption properties of the surface materials.

UVS Configuration = F/F Full Scans

PB Mbits = (4 RIMs)(1008 bps) = 0.245 Mbits

Design Detail

```
CDS RIM Command Parameters                                  PSID
--- --- -------- ----------                                 ----
38  003 CMDRS                                              (CO)
    004      1   34UVS,07,S,N,N,N,S,0,  ON,OFF,OFF,  ON,OFF,NOOVR,1,00,9C,00,00
    008      5   34UVS,C1,F,N,N,N,S,0,OFF,OFF,  ON,OFF,OFF,NOOVR,1,2C,05,00,00
```

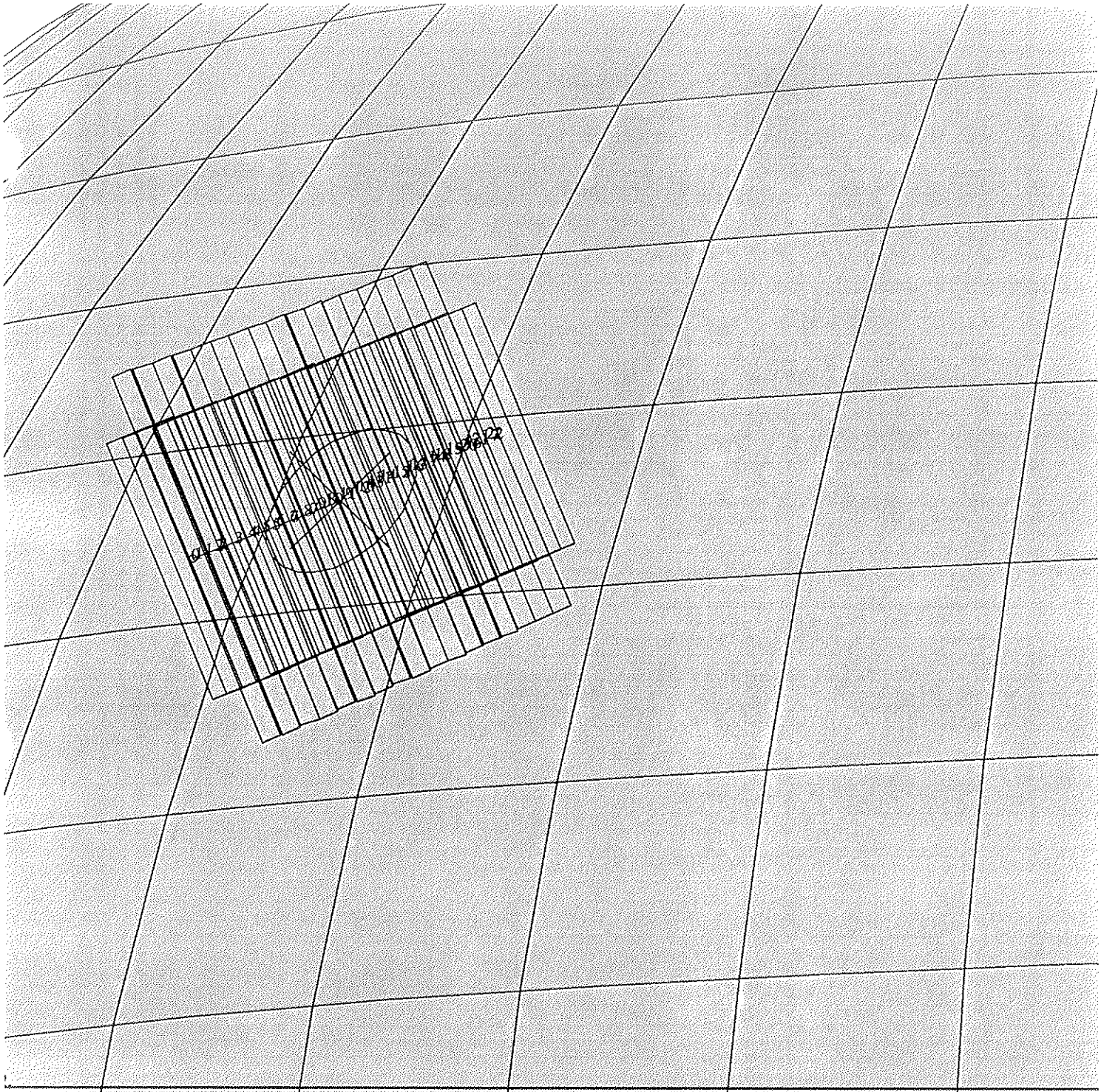

165DN:TT= 0 TMC= 1 C= 4.00 XC= 0.00 BS= 0/8437 TC= 1(33 223)
A= 546 pD= 888 SR=17.450 RA50=258.10 DEC50=-15.48 cone=155.00 clock=112.03
117DN:#SB= 1 OR= 0.030 RR= 0.010 BM=F RC= 1 BS= 0/8437
1:#s= 1 Cs= -8.80 XCs= 0.00 Cr= 0.00 XCr= 0.00 sD= 888 rD= 2

ESIGN G1.0 jaiel: 4/26/1996 9:52:42

ILE:P.G1GNAMON__01

ARGET BODY : GANYMEDE

INI:m.G1GNAMON__01

EPH:/DATA/NAVIO/T-960110-ALL.NS

ERIAPSIS:

THINNING:NIM 2 :UVS 1

TART:GTE 96-179/06:29:26.933 -CDS 86:00:0

BODY PLOT TIME:TARGET-TIME D= 888 S= 5.000

Tue May 7 18:48:45 1996

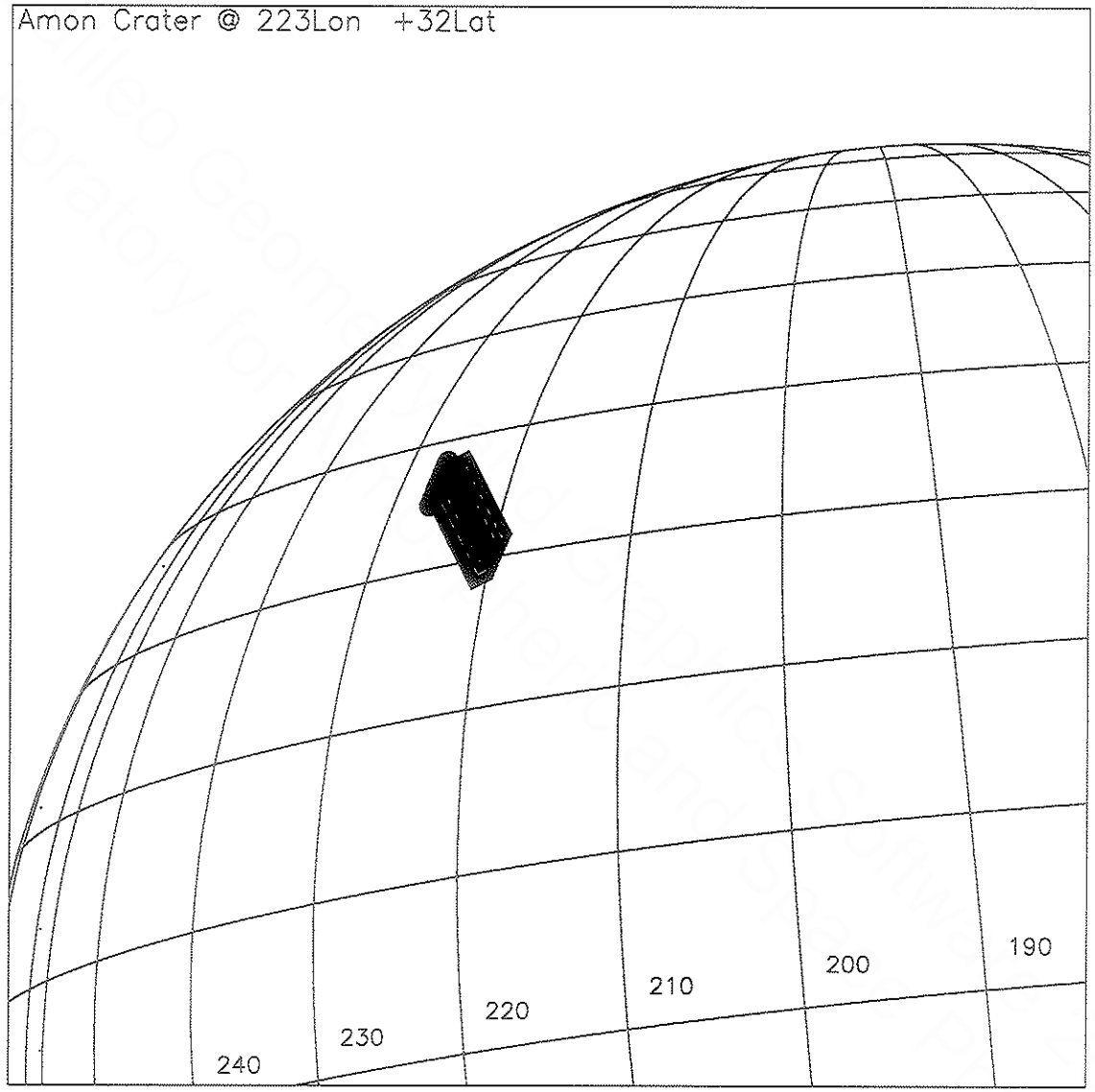

Start UTC_TIME : 1996-179 // 05:04:30.000
No End Time :
Start SCLK : 1/03497526:04:6:4

Target Body : GANYMEDE
Target Cone/Clock : 154.10/105.15 Deg
S/C to Body Center : 38257.51 Km (14.524490 Rg)
Z-axis Pointing (Ra / Dec) : 102.80 / 25.00 Deg

Activity ID: Orbit G1 **OAPEL** GUISPTAH **SeqNo** 01+

Title UVS NIMS GANYMEDE ISPTAH RIDE-ALONG **Instrument** UVS

Requestor UVS-SWG/K.NAVIAUX 37740 **Team** UVS **Working Group** SWG

Time System CDS **Load ID** **Calendar Date** 06/27/96 **Week** 26

Start	GTE-CDS 00000080:00:0	96-179/05:08:33.600	GTE-000/01:20:53.333
End	GTE-CDS 00000072:00:0	96-179/05:16:38.933	GTE-000/01:12:48.000
Duration	00000008:00:0	000/00:08:05.333	000/00:08:05.333

Top Label G1GUISPTAH01+

Bottom Label (ride-along)

Plot Key	UVS	**Type**	SCI		
CDS Bytes	38	**Report Options**	BOTH	**Scan Platform**	No
CDS Source	OAP	**Spin State**	DUAL	**DMS**	No

Observation Objective

Ride-Along with NIMS Ganymede ISPTAH Observation (2 rayed craters ISIS & PTAH near south pole). Extend the surface scattering property measurments into the ultraviolet (1600Å - 3200Å) in concert with NIMS measurements to infer information abou;particle size, and refractive and absorption properties of the surface materials.

UVS Configuration = F/F Full Scans

PB Mbits = (3 RIMs)(1008 bps) = 0.184 Mbits

Design Detail

```
CDS RIM Command Parameters                          PSID
--- --- ------- ----------                          ----
38  003 CMDRS                                       (CP)
    004     1   34UVS,07,S,N,N,N,S,0,  ON,OFF,OFF,  ON,OFF,NOOVR,1,00,9C,00,00
    007     4   34UVS,C1,F,N,N,N,S,0,OFF,OFF,  ON,OFF,OFF,NOOVR,1,2C,05,00,00
```

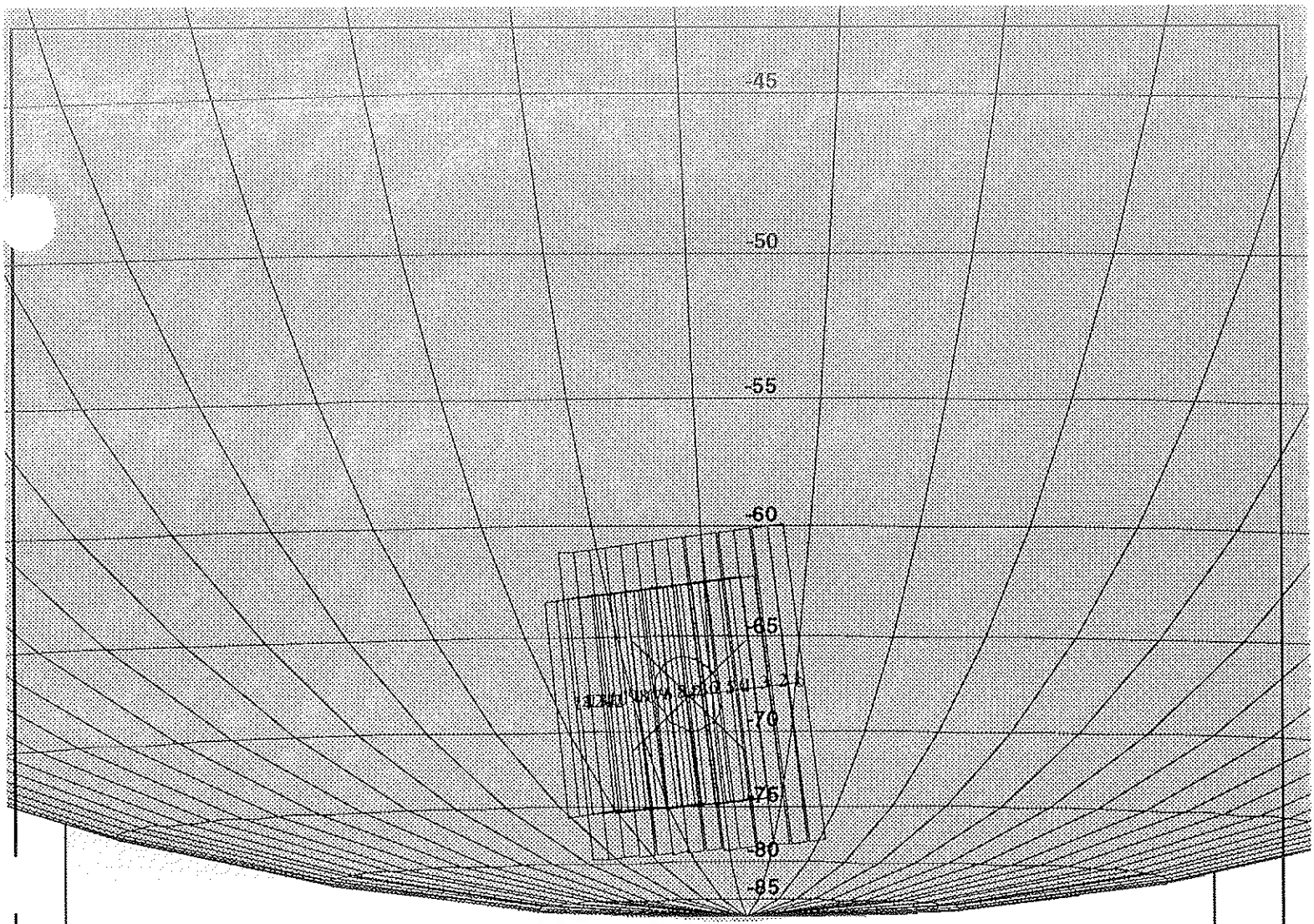

2

165DO:TT= 0 TMC= 1 C= -3.50 XC= 0.00 BS= 0/0075 TC= 1(-68 196.5)
A= 546 pD= 706 SR=17.450 RA50=255.94 DEC50=-21.97 cone=155.22 clock= 95.83
117DO:#SB= 1 OR= 0.030 RR= 0.010 BM=F RC= 1 BS= 0/0075
1:#s= 1 Cs= 7.00 XCs= 0.00 Cr= 0.00 XCr= 0.00 sD= 706 rD= 2

DESIGN G1.0 jaiel: 4/ 2/1996 15:20:55

FILE:P.G1GNPTAH__01

TARGET BODY : GANYMEDE

MINI:m.G1GNPTAH__01

EPH:/DATA/NAVIO/T-960110-ALL.NS

PERIAPSIS:

THINNING:NIM 2 :UVS 1

START:GTE 96-179/06:29:26.933 -CDS 77:00:0

BODY PLOT TIME:TARGET-TIME D= 706 S= 4.000

OBSERVATION:G1GNPTAH__01

DESCRIP:Ray_craters/brigt_s_pole

Tue May 7 19:01:47 1996

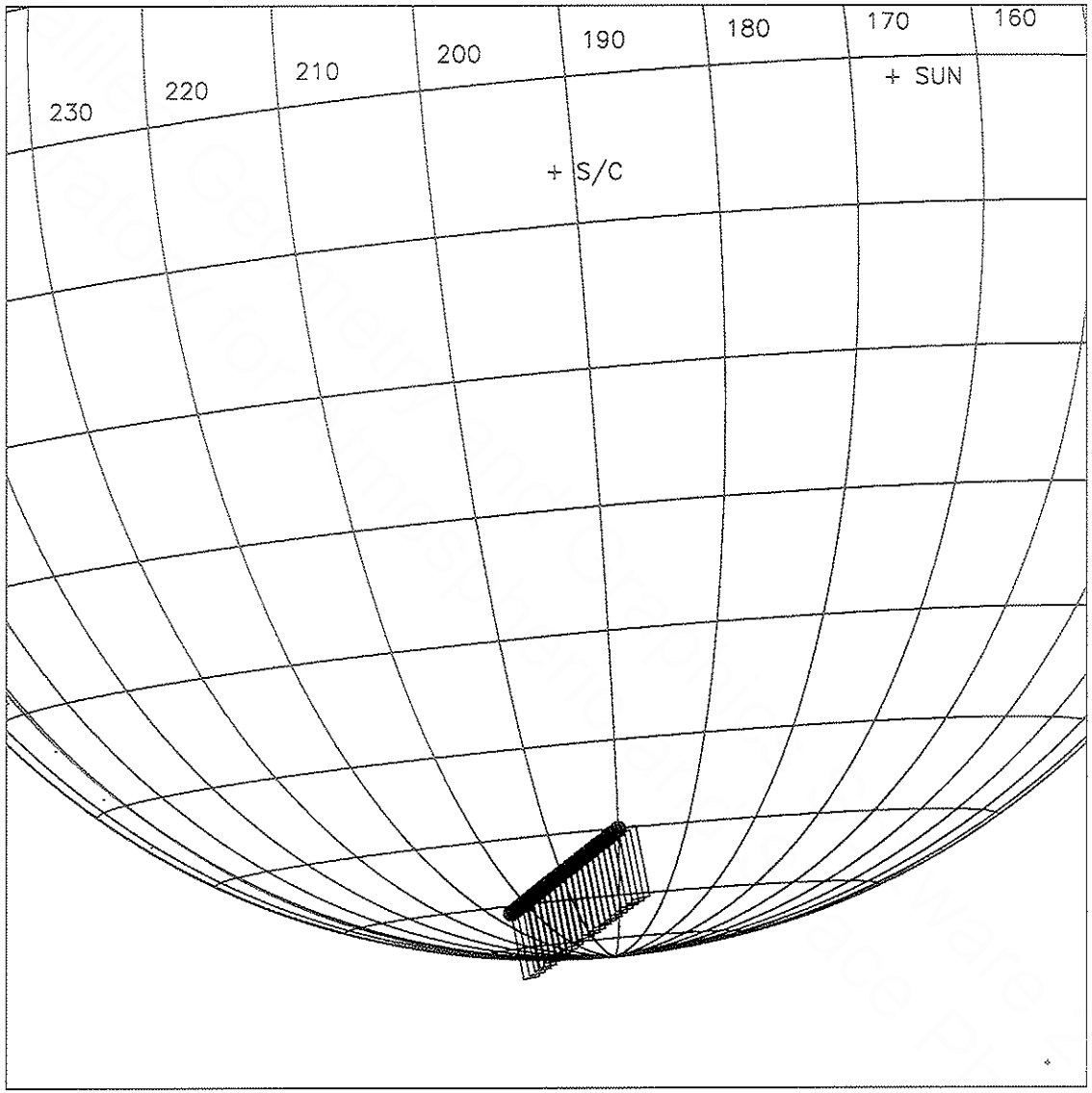

Start UTC_TIME : 1996-179 // 05:12:33.000
No End Time :
Start SCLK : 1/03497534:01:1:5

Target Body : GANYMEDE
Target Cone/Clock : 154.64/104.80 Deg
S/C to Body Center : 34662.64 Km (13.159696 Rg)
Z-axis Pointing (Ra / Dec) : 102.80 / 25.00 Deg

15.45 R

Activity ID: Orbit G1 **OAPEL** GUNIPPUR **SeqNo** 01+

Title UVS NIMS GANYMEDE NIPPUR RIDE-ALONG **Instrument** UVS

Requestor UVS-SWG/K.NAVIAUX 37740 **Team** UVS **Working Group** SWG

Time System CDS **Load ID** G1A **Calendar Date** 06/27/96 **Week** 26

Start	GTE-CDS 00000072:00:0	96-179/05:16:38.933	GTE-000/01:12:48.000
End	GTE-CDS 00000057:00:0	96-179/05:31:48.933	GTE-000/00:57:38.000
Duration	00000015:00:0	000/00:15:10.000	000/00:15:10.000

Top Label G1GUNIPPUR01+

Bottom Label (ride-along)

Plot Key	UVS	**Type**	SCI		
CDS Bytes	38	**Report Options**	BOTH	**Scan Platform**	No
CDS Source	OAP	**Spin State**	DUAL	**DMS**	No

Observation Objective

Ride-Along with NIMS Ganymede Nippur Sulcus Observation (grooved & furrowed terrain on trailing hemisphere). Extend the surface scattering property measurments into the ultraviolet (1600Å - 3200Å) in concert with NIMS measurements to infer information abou;particle size, and refractive and absorption properties of the surface materials.

UVS Configuration = F/F Full Scans

PB Mbits = (11 RIMs)(1008 bps) = 0.673 Mbits

Design Detail

```
CDS RIM Command Parameters                                  PSID
--- --- -------- ----------                                 ----
38  003 CMDRS                                               (CR)
    004     1    34UVS,07,S,N,N,N,S,0,  ON,OFF,OFF,  ON,OFF,NOOVR,1,00,9C,00,00
    015    12    34UVS,C1,F,N,N,N,S,0,OFF,OFF,  ON,OFF,OFF,NOOVR,1,2C,05,00,00
```

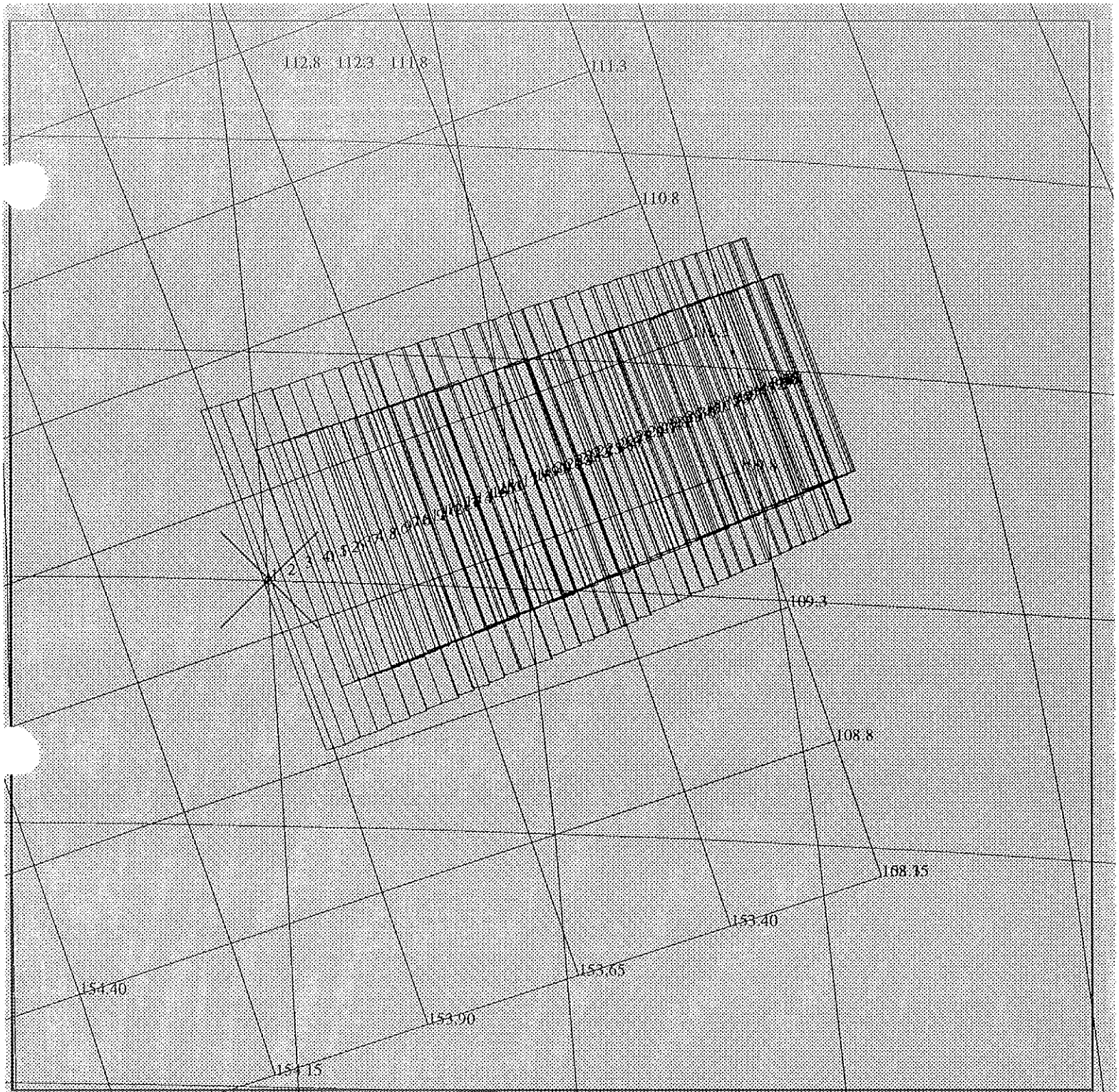

165DP:TT= 0 TMC= 1 C= 0.00 XC= 0.00 BS= 0/1713 TC= 1/25 185
A= 546 pD= 2002 SR=17.450 RA50=256.68 DEC50=-15.81 cone=153.91 clock=109.98
117DP:#SB= 1 OR= 0.030 RR=12.000 BM=F RC= 1 BS= 0/1713
1:#s= 1 Cs= -19.00 XCs= 0.00 Cr= 0.00 XCr= 0.00 sD= 2002 rD= 2

DESIGN G1.0 jaiel: 4/ 2/1996 15:20:20

FILE:P.G1GNNIPPUR01

TARGET BODY : GANYMEDE

MINI:m.G1GNNIPPUR01

EPH:/DATA/NAVIO/T-960110-ALL.NS

PERIAPSIS:

THINNING:NIM 2 :UVS 1

START:GTE 96-179/06:29:26.933 -CDS 68:00:0

BODY PLOT TIME:START-TIME D= 2002 S= 6.000

OBSERVATION:G1GNNIPPUR01

DESCRIP:Nippur Sulcus groove&furrow

Mon Apr 29 15:30:49 1996

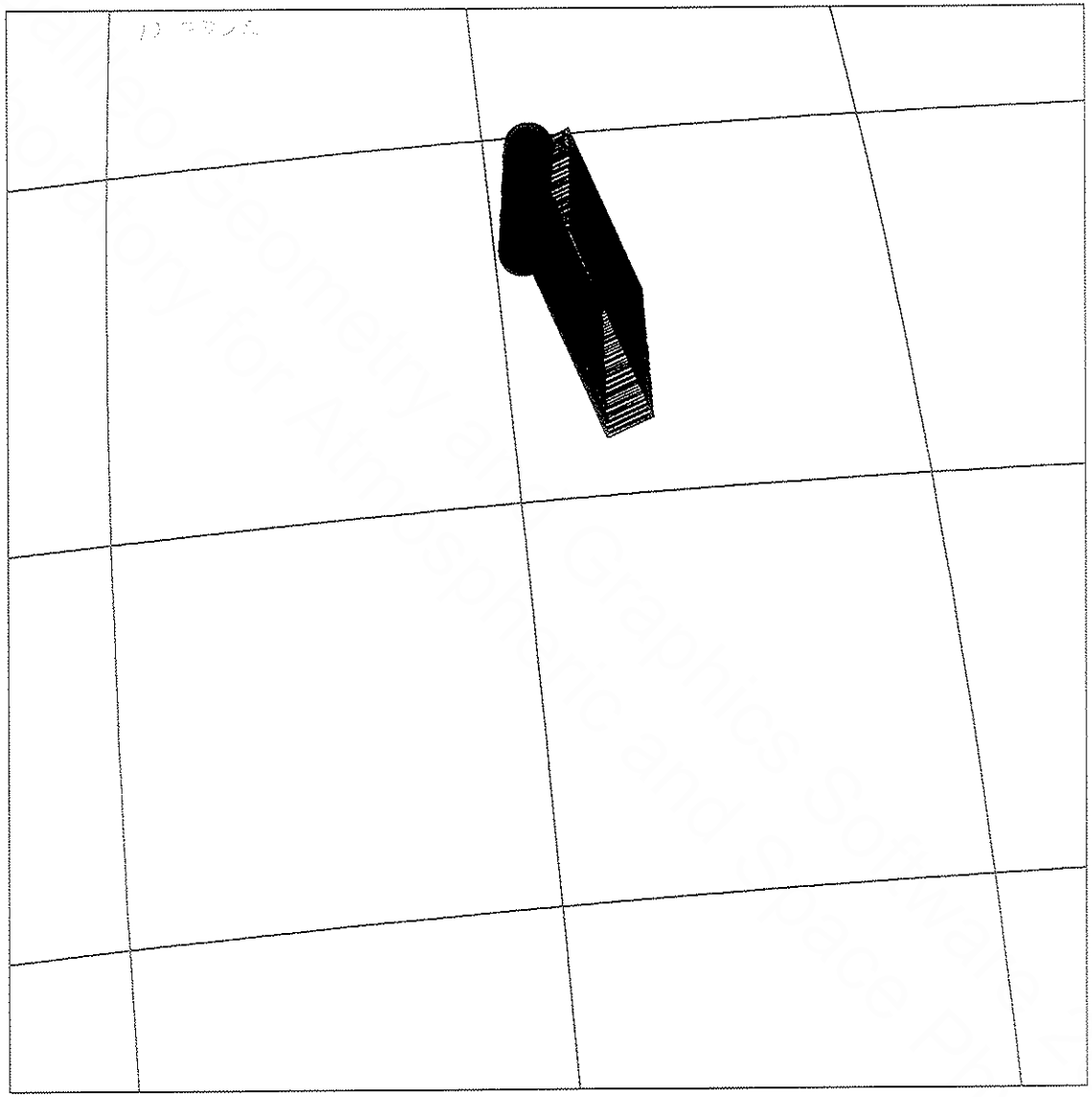

Start UTC_TIME : 1996-179 // 05:16:38.000
No End Time :
Start SCLK : 1/03497538:04:6:5

Target Body : GANYMEDE
Target Cone/Clock : 154.96/104.58 Deg
S/C to Body Center : 32840.52 Km (12.467925 Rg)
Z-axis Pointing (Ra / Dec) : 102.80 / 25.00 Deg

15.45 K

Activity ID: Orbit G1 **OAPEL** GUBRTLMB **SeqNo** 01-

Title UVS GANYMEDE BRIGHT LIMB (H & O) **Instrument** UVS

Requestor UVS-SWG/K.NAVIAUX 37740 **Team** UVS **Working Group** SWG

Time System CDS **Load ID** G1A **Calendar Date** 06/27/96 **Week** 26

Start	GTE-CDS 00000019:00:0	96-179/06:10:14.267	GTE-000/00:19:12.666
End	GTE-CDS 00000010:00:0	96-179/06:19:20.267	GTE-000/00:10:06.666
Duration	00000009:00:0	000/00:09:06.000	000/00:09:06.000

Top Label G1GUBRTLMB01-

Bottom Label (recorded)

Plot Key	UVS	**Type**	SCI		
CDS Bytes	74	**Report Options**	BOTH	**Scan Platform**	Yes
CDS Source	OAP	**Spin State**	DUAL	**DMS**	No

Observation Objective

Measure the altitude distribution of volatiles near the sub-solar point to determine the escape rates from the Jovian satellites when the atmosphere is in full solar illumination. Search for outgassing of atomic H (1216 Å) and atomic O (1304 Å). 9 RIM Ganymede Bright Limb Drift Observation (2 RIM target slew + 7 RIM recorded drift). Target s/p to ~1 Rg off satellite limb and allow s/c motion to drift FOV onto the bright limb.

UVS Configuration = Lyman-Alpha Mini-Scans
Atomic Oxygen Mini-Scans

PB Mbits = (7 RIMs)(1008+144 bps) = 0.489 Mbits

Design Detail

```
CDS RIM Command Parameter                                  PSID
--- --- -------- ---------                                  ----
38  001 CMDRS                                              (CJ)
    002     1    34UVS,D1,F,N,N,N,S,0,OFF,OFF,  ON,  ON,OFF,NOOVR,1,5A,45,00,00
    009     8    34UVS,C1,F,N,N,N,S,0,OFF,OFF,  ON,OFF,OFF,NOOVR,1,2C,05,00,00
0       SCIREC   (using FPST continuous recording around c/a for recording data)
36  002 TARGET   (2 RIM Posn_Slew)                         (CJ)
```

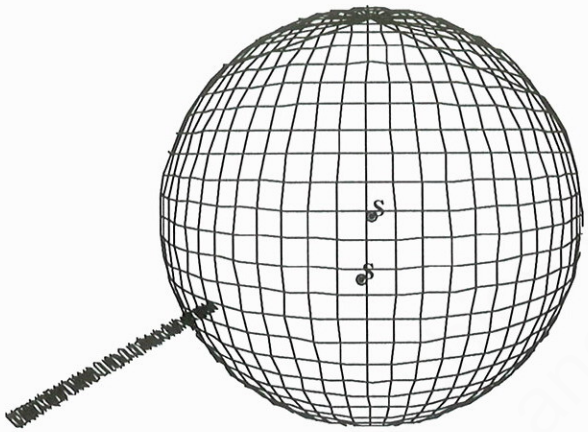

165CX:TT= 0 TMC= 1 C= -344.00 XC= -345.48 BS= 0/0816 TC= 9
A= 234 pD= 0 SR=17.430 RA50=313.04 DEC50=-38.92 cone=151.00 clock=310.45

ARGET G1.0 brad : 2/28/1996 12:55: 7

ILE:P.G1GUBRTLMB01

ARGET BODY : GANYMEDE

INI:m.target.enc

: EPH:/DATA/NAVIO/T-960110-ALL.NS

ERIAPSIS: THINNING:NONE :UVS 1

TART:GTE 96-179/06:29:26.933 -CDS 18:00:0 BODY PLOT TIME:96-179/06:18:15.600 D= 0 S= 0.250

Galileo Geometry and Graphics Software 2001
Laboratory for Atmospheric and Space Physics

RTS ingrs ~~Bri~~ RA = 313.04
SCE = 179/06:14:12 Dec = -38.96

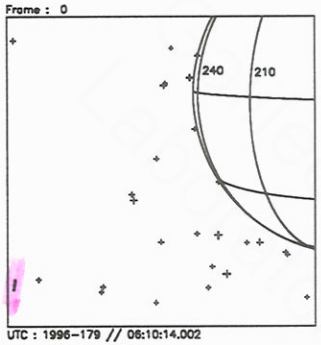

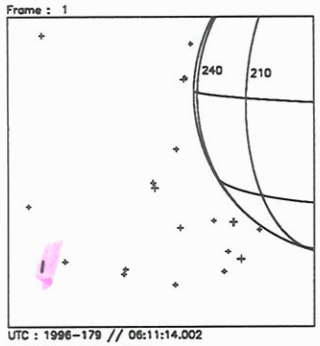

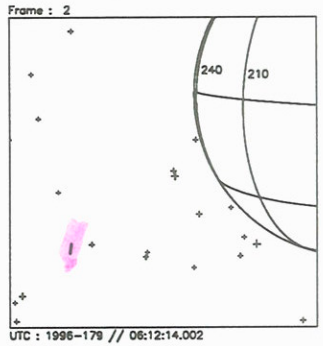

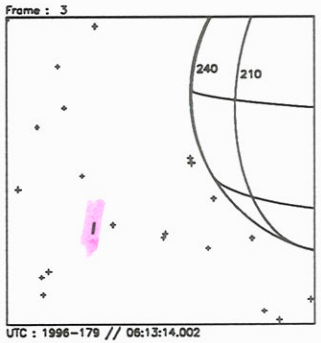

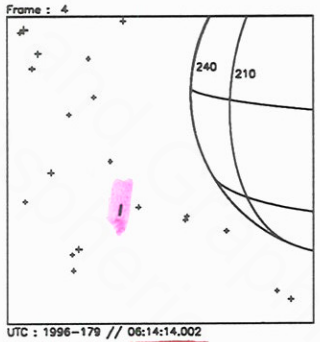

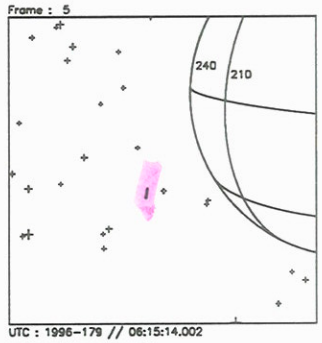

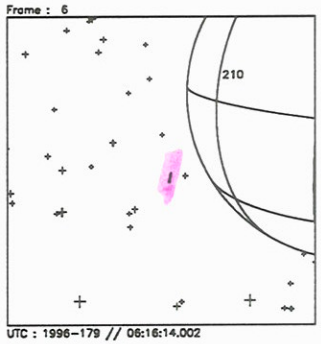

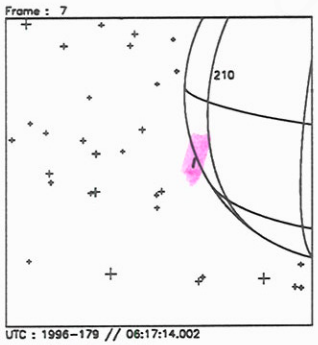

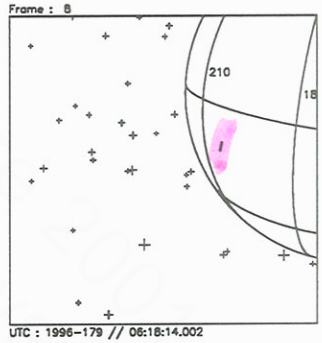

Start UTC_TIME : 1996-179 // 06:10:14.000
No End Time :
Start SCLK : 1/03497591:05:6:5

Target Body : GANYMEDE
Target Cone/Clock : 169.94/ 77.63 Deg
S/C to Body Center : 9239.457 Km (3.5077664 Rg)
Z-axis Pointing (Ra / Dec) : 102.80 / 25.00 Deg

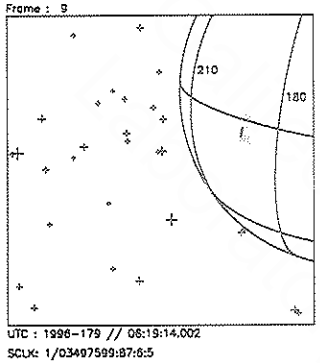

Geometry and Graphics Software Suite
Developed for Atmospheric and Geophysics Branch

Start UTC_TIME : 1996-179 // 06:10:14.000
No End Time :
Start SCLK : 1/03497591:05:6:5

Target Body : GANYMEDE
Target Cone/Clock : 169.03/336.59 Deg
S/C to Body Center : 5673.809 Km (2.1540656 Rg)
Z-axis Pointing (Ra / Dec) : 102.80 / 25.00 Deg

Activity ID: Orbit G1 **OAPEL** GUBRTLMB **SeqNo** 02-

Title UVS GANYMEDE BRIGHT LIMB (OH) **Instrument** UVS

Requestor UVS-SWG/K.NAVIAUX 37740 **Team** UVS **Working Group** SWG

Time System CDS **Load ID** G1A **Calendar Date** 06/27/96 **Week** 26

Start	GTE-CDS 00000007:00:0	96-179/06:22:22.267	GTE-000/00:07:04.666
End	GTE-CDS 00000002:00:0	96-179/06:27:25.600	GTE-000/00:02:01.333
Duration	00000005:00:0	000/00:05:03.333	000/00:05:03.333

Top Label G1GUBRTLMB02-

Bottom Label (recorded)

Plot Key	UVS	**Type**	SCI		
CDS Bytes	99	**Report Options**	BOTH	**Scan Platform**	Yes
CDS Source	OAP	**Spin State**	DUAL	**DMS**	No

Observation Objective

Measure the altitude distribution of volatiles near the sub-solar point to determine the escape rates from the Jovian satellites when the atmosphere is in full solar illumination. Search for outgassing of OH (3019.9-31114.2Å) using the N-channel. 4 RIM Ganymede Bright Limb Drift observation (1 RIM target slew + 3 RIM recorded data). Target s/p to ~1000 Km off satellite limb and allow s/c motion to drift FOV onto the bright limb sub-solar point.

3064 [illegible]

UVS Configuration = N/N 1-posn 33-step on OH (3019.9Å - 3114.2Å)

NIMS and PWS will ride-along with this observation at the 28.8 kbps record rate.

PB Mbits = (3 RIMs)(1008+144 bps) = 0.210 Mbits

Design Detail

```
CDS RIM Command Parameter                                  PSID
--- --- -------- ---------                                  ----
38  001 CMDRS                                              (CK)
    002      1   34UVS,D7,F,N,N,N,S,0,OFF,  ON,OFF,  ON,OFF,NOOVR,1,6F,5D,00,00
    005      4   34UVS,C1,F,N,N,N,S,0,OFF,OFF,  ON,OFF,OFF,NOOVR,1,2C,05,00,00
25  002 SCIREC   (MPW-28.8 kbps recording)                 (CA)
36  002 TARGET   (2 RIM Posn_Slew)                         (CK)
```

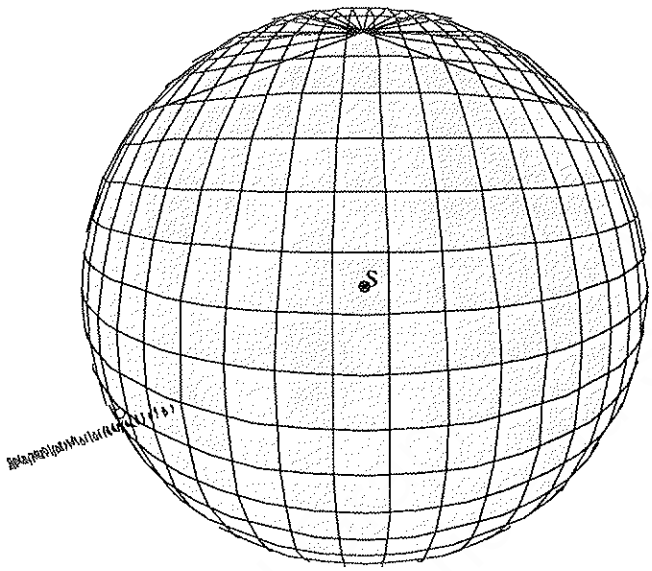

165CY:TT= 0 TMC= 1 C=-1033.91 XC= -7.21 BS= 0/3182 TC= 9
A= 350 pD= 0 SR=17.430 RA50= 29.12 DEC50=-32.10 cone= 90.51 clock=310.00

ARGET G1.0 brad : 2/28/1996 12:55: 7

ILE:P.G1GUBRTLMB02

ARGET BODY : GANYMEDE

INI:m.target.enc

: EPH:/DATA/NAVIO/T-960110-ALL.NS

ERIAPSIS: THINNING:NONE :UVS 1

TART:GTE 96-179/06:29:26.933 -CDS 05:00:0 BODY PLOT TIME:96-179/06:27:25.600 D= 0 S= 0.250

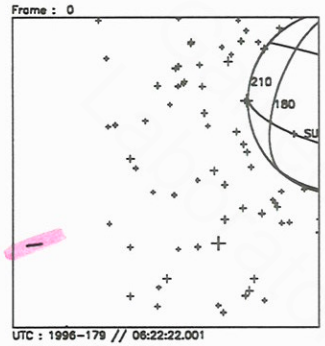

UTC : 1996-179 // 06:22:22.001
SCLK: 1/03497603:05:6:5

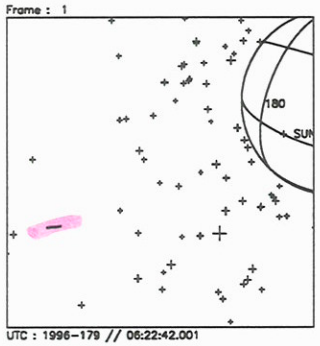

UTC : 1996-179 // 06:22:42.001
SCLK: 1/03497603:35:6:5

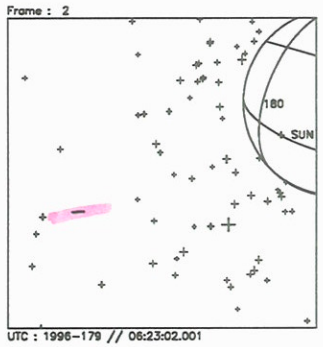

UTC : 1996-179 // 06:23:02.001
SCLK: 1/03497603:65:6:5

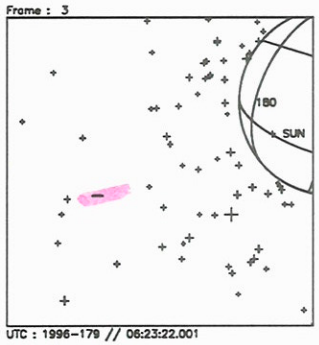

UTC : 1996-179 // 06:23:22.001
SCLK: 1/03497604:04:6:5

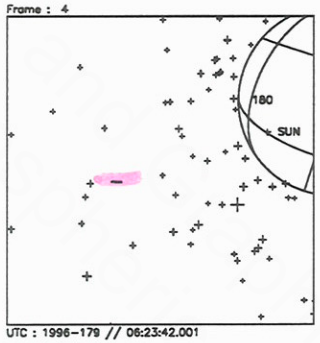

UTC : 1996-179 // 06:23:42.001
SCLK: 1/03497604:34:6:5

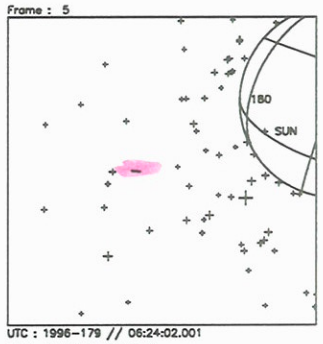

UTC : 1996-179 // 06:24:02.001
SCLK: 1/03497604:64:6:5

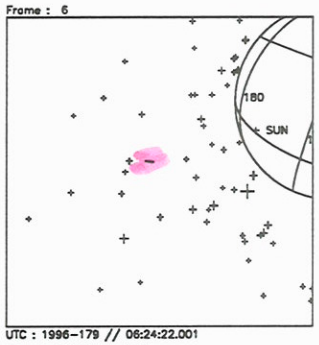

UTC : 1996-179 // 06:24:22.001
SCLK: 1/03497605:03:6:5

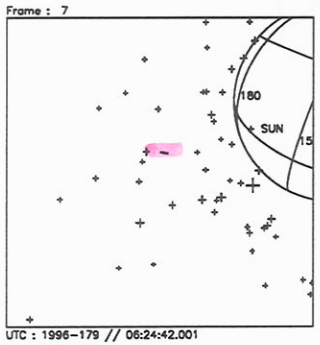

UTC : 1996-179 // 06:24:42.001
SCLK: 1/03497605:33:6:5

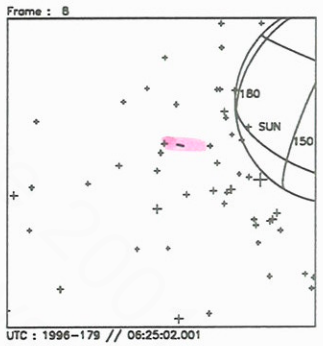

UTC : 1996-179 // 06:25:02.001
SCLK: 1/03497605:63:6:5

Start UTC_TIME : 1996-179 // 06:22:22.000
No End Time :
Start SCLK : 1/03497603:05:6:5
Delta Time between FOV : 20.00000
FOVs : N/G Channel(0.1x1.0)

Target Body : GANYMEDE
Target Cone/Clock : 159.06/317.10 Deg
S/C to Body Center : 4630.961 Km (1.7581478 Rg)
Z-axis Pointing (Ra / Dec) : 102.80 / 25.00 Deg

RTS @ 179//06:24 29.086 , -32.108

Frame : 9

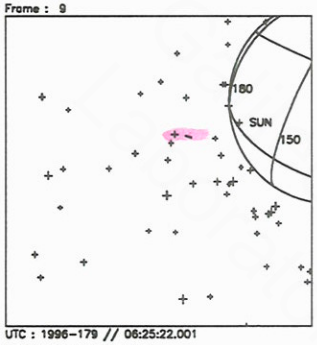

UTC : 1996-179 // 06:25:22.001
SCLK: 1/03497606:02:6:5

Frame : 10

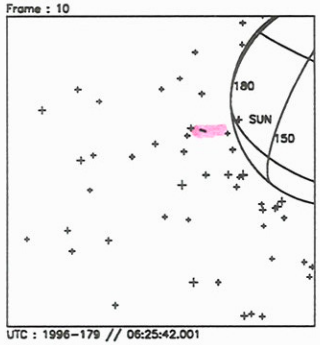

UTC : 1996-179 // 06:25:42.001
SCLK: 1/03497606:32:6:5

Frame : 11

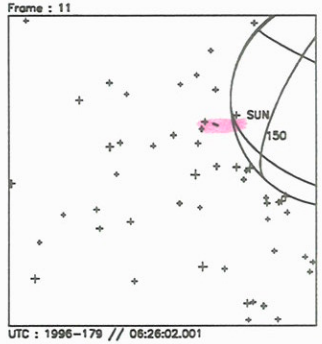

UTC : 1996-179 // 06:26:02.001
SCLK: 1/03497606:62:6:5

Frame : 12

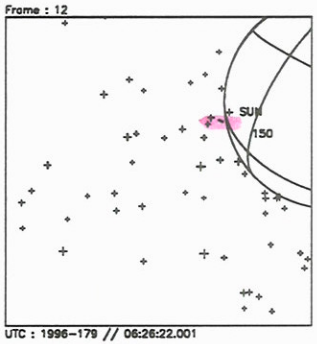

UTC : 1996-179 // 06:26:22.001
SCLK: 1/03497607:01:6:5

Frame : 13

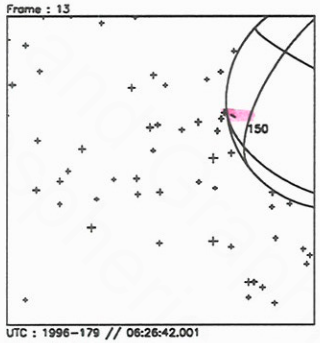

UTC : 1996-179 // 06:26:42.001
SCLK: 1/03497607:31:6:5

Frame : 14

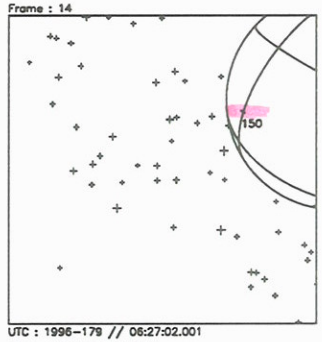

UTC : 1996-179 // 06:27:02.001
SCLK: 1/03497607:61:6:5

Frame : 15

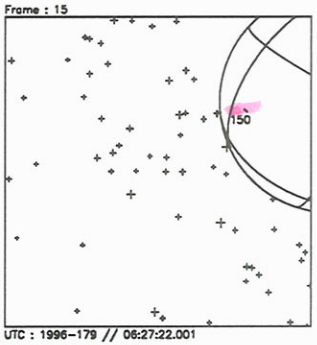

UTC : 1996-179 // 06:27:22.001
SCLK: 1/03497608:00:6:5

Start UTC_TIME : 1996-179 // 06:22:22.000
No End Time :
Start SCLK : 1/03497603:05:6:5
Delta Time between FOV : 20.00000
FOVs : N/G Channel(0.1x1.0)

Target Body : GANYMEDE
Target Cone/Clock : 143.76/308.42 Deg
S/C to Body Center : 3866.804 Km (1.4680351 Rg)
Z-axis Pointing (Ra / Dec) : 102.80 / 25.00 Deg

Activity ID: Orbit G1 **OAPEL** GUDRKLMB **SeqNo** 01-

Title UVS GANYMEDE DARK LIMB (H & O) **Instrument** UVS

Requestor UVS-SWG/K.NAVIAUX 37740 **Team** UVS **Working Group** SWG

Time System CDS **Load ID** G1A **Calendar Date** 06/27/96 **Week** 26

Start	GTE+CDS 00000003:00:0	96-179/06:32:28.933	GTE+000/00:03:02.000
End	GTE+CDS 00000013:00:0	96-179/06:42:35.599	GTE+000/00:13:08.666
Duration	00000010:00:0	000/00:10:06.666	000/00:10:06.666

Top Label G1GUDRKLMB01-

Bottom Label (recorded)

Plot Key	UVS	**Type**	SCI		
CDS Bytes	74	**Report Options**	BOTH	**Scan Platform**	Yes
CDS Source	OAP	**Spin State**	DUAL	**DMS**	No

Observation Objective

Measure the altitude distribution of volatiles off the dark limb to determine the particle impact excitation emission rates from the Jovian satellites. Search for outgassing of atomic H (1216 Å) and atomic O (1304 Å). 10 RIM Ganymede Dark Limb Drift observation (2 RIM target slew + 8 RIM recorded data). Target s/p to satellite dark limb and allow s/c motion to drift the FOV to ~1 Rg off the dark limb.

UVS Configuration = Lyman-Alpha Mini-Scans
Atomic Oxygen Mini-Scans

PB Mbits = (8 RIMs)(1008+144 bps) = 0.559 Mbits

Design Detail

```
CDS RIM Command Parameter                                  PSID
--- --- -------- ---------                                  ----
38  001 CMDRS                                              (CL)
    002     1    34UVS,D1,F,N,N,N,S,0,OFF,OFF,  ON,  ON,OFF,NOOVR,1,5A,45,00,00
    010     9    34UVS,C1,F,N,N,N,S,0,OFF,OFF,  ON,OFF,OFF,NOOVR,1,2C,05,00,00
0       SCIREC   (using FPST continuous recording around c/a for recording data)
36  002 TARGET   (2 RIM Posn_Slew)                         (CL)
```

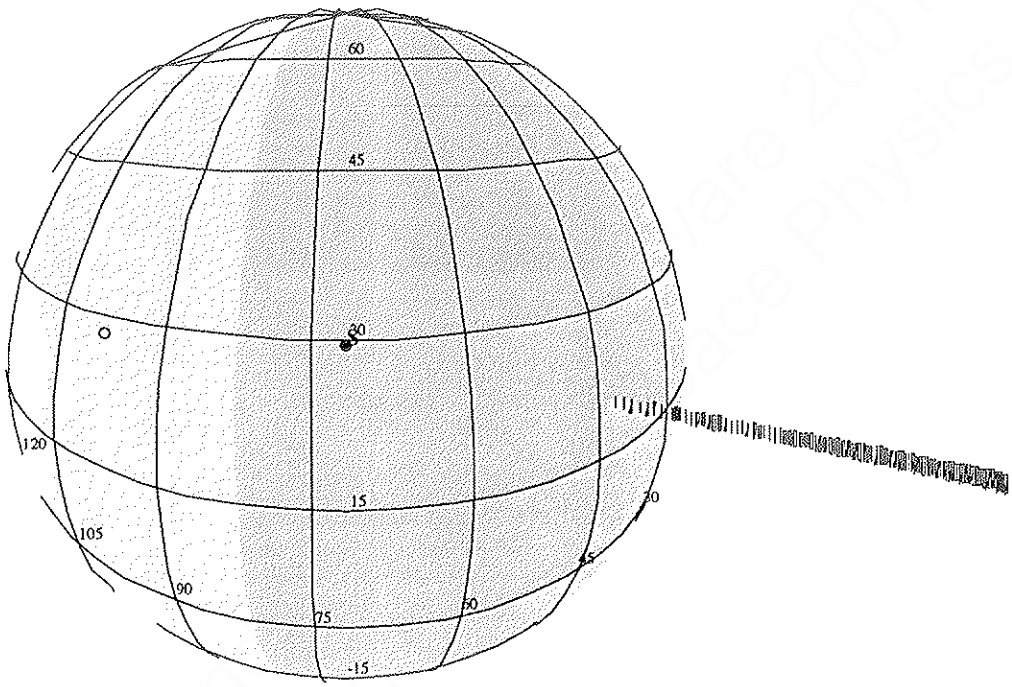

165CZ:TT= 0 TMC= 1 C= 562.94 XC= 74.43 BS= 0/5002 TC= 9
A= 364 pD= 0 SR=17.430 RA50=359.77 DEC50=-34.19 cone=113.99 clock=302.50

ARGET G1.0 brad : 2/28/1996 12:55: 7

ILE:P.G1GUDRKLMB01

ARGET BODY : GANYMEDE

INI:m.target.enc

: EPH:/DATA/NAVIO/T-960110-ALL.NS

ERIAPSIS: THINNING:NONE :UVS 1

TART:GTE 96-179/06:29:26.933 +CDS 05:00:0 BODY PLOT TIME:96-179/06:34:26.266 D= 0 S= 0.350

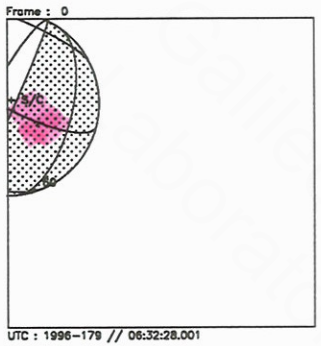

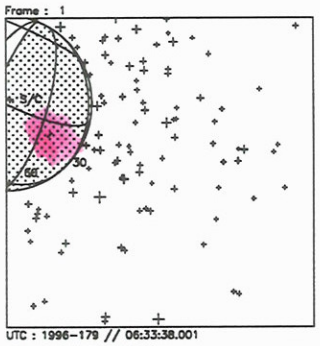

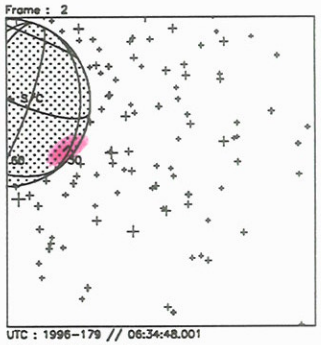

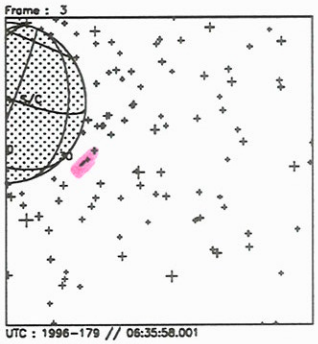

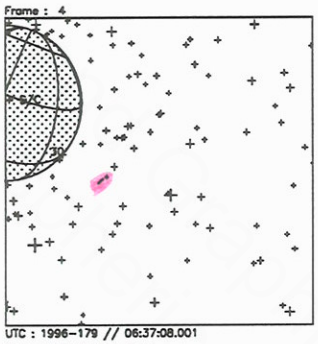

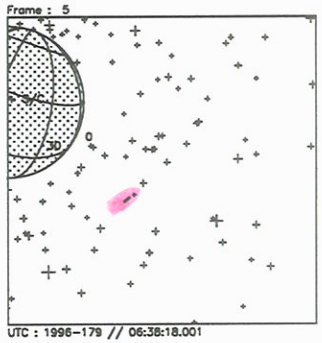

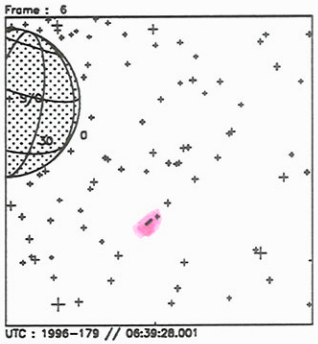

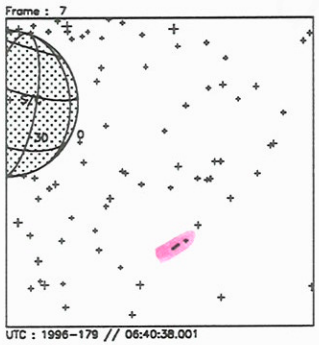

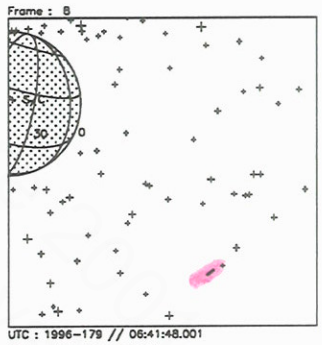

Start UTC_TIME : 1996-179 // 06:32:28.000
No End Time :
Start SCLK : 1/03497613:04:6:5

Target Body : GANYMEDE
Target Cone/Clock : 93.08/299.54 Deg
S/C to Body Center : 3808.691 Km (1.4459724 Rg)
Z-axis Pointing (Ra / Dec) : 102.80 / 25.00 Deg

RTS says 179/06:34: 359.758 , -34.195
39: 11.753 , -34.195

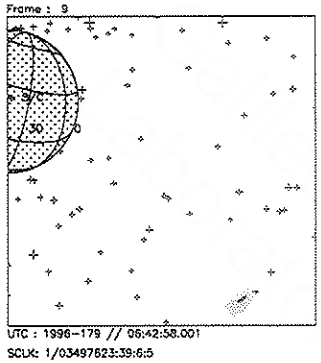

Start UTC_TIME : 1996-179 // 06:32:28.000
No End Time :
Start SCLK : 1/03497613:04:6:5

Target Body : GANYMEDE
Target Cone/Clock : 55.17/294.48 Deg
S/C to Body Center : 7219.671 Km (2.7409532 Rg)
Z-axis Pointing (Ra / Dec) : 102.80 / 25.00 Deg

Geometry and Graphics Software Group
Jet Propulsion Laboratory
Atmospheric and Graphics Group

ACTIVITY ID: G1TUG1NPRO01-

START TIME: 96-176/23:40:18.266

Activity ID: **Orbit** G1 **OAPEL** TUG1NPRO **SeqNo** 01-

Title UVS NOON ANSA PROFILE 1 **Instrument** UVS

Requestor UVS-MWG/S.STEPHENS 37737 **Team** UVS **Working Group** MWG

Time System CDS **Load ID** G1A **Calendar Date** 06/24/96 **Week** 26

Start	JEE-CDS 00004323:00:0	96-176/23:40:18.266	JEE-003/00:51:02.000
End	JEE-CDS 00004115:00:0	96-177/03:10:36.933	JEE-002/21:20:43.333
Duration	00000208:00:0	000/03:30:18.667	000/03:30:18.667

Top Label G1TUG1NPRO01-

Bottom Label (UVS RTS Torus)

Plot Key UVS **Type** SCI

CDS Bytes 214 **Report Options** BOTH **Scan Platform** Yes

CDS Source PA **Spin State** DUAL **DMS** No

Observation Objective

UVS IO TORUS NOON ANSA RADIAL PROFILE 1 (NO EUV):
From: 5.27 Rj (inside ribbon) at cone > 90 (ribbon at 5.65 Rj, Sys III W Long 31)
To: 6.01 Rj (outside ribbon) at fixed cone
Data rate: Instrument states usually last 60 RIMS; thus, 4.87 bps UVS
OPTRTM/UVFLUSH STRATEGY (17,712 bits per UVS or EUV PACKET):
UVS deselected; thus, 60-RIM UVFLUSHes needed to PACKET UVS, after initial DISCRD
WAVELENGTHS (Angstroms):
Emission lines: UVS (S+ 1259, O+ 2471)
2POSN-22STEP F/G MINISCAN (UVS): F 2436.8-2501.0 (CTR 2470.4, STEP 275) [EVEN FRAMES],
G 1239.8-1272.1 (CTR 1256.7, STEP 81) [ODD FRAMES]
2POSN-1STEP G/G MINISCAN (UVS): G 1258.2 (STEP 82) [EVEN FRAMES],
G 1341.0 (STEP 136) [ODD FRAMES]
Strategy for MINISCANS: No N channel until after G1 UVS-SWG Bright Limb observation
Alternate 22STEP and 1STEP for PWS quiet

Design Detail

Last modified 05/04/96

PSID	RIM:mf	CDS	PA
384BF	0	0	COMMENT [UVS RIM 0]
157BD	3	66	CMDRS (10+14*4) [PLAN DUR 205, EST UVS CMDS 4]
349BN	3:69	28	UVFLUSH [6UVRT, DISCRD, UVS]
165BD	4	36	TARGET [CONE 103.39, CLOCK 94.13]
	4		34UVS,C1,F,N,N,N,S,0,OFF,OFF,ON,ON,OFF,NO,1,7E,05,00,36 [1STEP G/G]
349BP	62:69	28	UVFLUSH [6UVRT, PACKET, UVS]
	64		34UVS,D3,F,N,N,N,S,0,ON,OFF,ON,ON,OFF,NO,1,08,4D,00,6A [22STEP F/G]
349BR	122:69	28	UVFLUSH [6UVRT, PACKET, UVS]
	124		34UVS,C1,F,N,N,N,S,0,OFF,OFF,ON,ON,OFF,NO,1,7E,05,00,36 [1STEP G/G]
349BU	206:69	28	UVFLUSH [6UVRT, PACKET, UVS]
	208		34UVS,C1,F,N,N,N,S,0,OFF,OFF,ON,OFF,OFF,NO,1,2C,05,00,00 [HVOFF]

Frame : 0

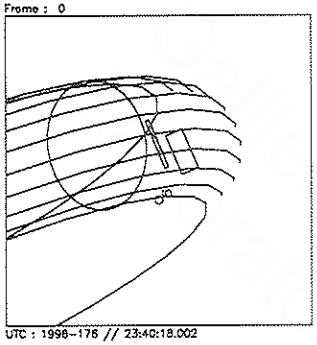

UTC : 1996-176 // 23:40:18.002
SCLK: 1/03494357:05:4:6

Frame : 1

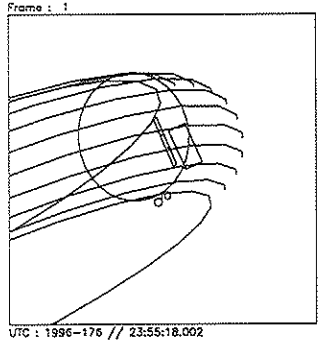

UTC : 1996-176 // 23:55:18.002
SCLK: 1/03494371:81:4:6

Frame : 3

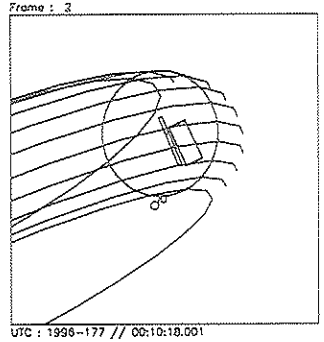

UTC : 1996-177 // 00:10:18.001
SCLK: 1/03494386:68:4:6

Frame : 3

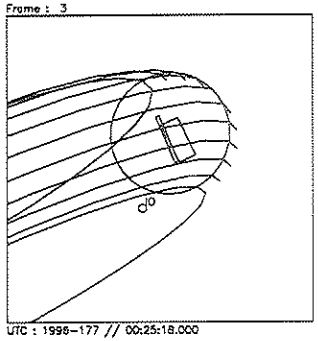

UTC : 1996-177 // 00:25:18.000
SCLK: 1/03494401:51:4:6

Frame : 4

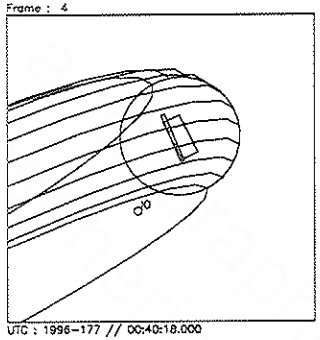

UTC : 1996-177 // 00:40:18.000
SCLK: 1/03494415:36:4:6

Frame : 5

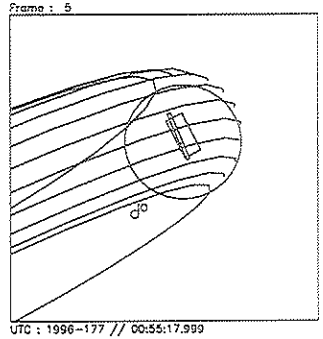

UTC : 1996-177 // 00:55:17.999
SCLK: 1/03494431:21:4:6

Frame : 6

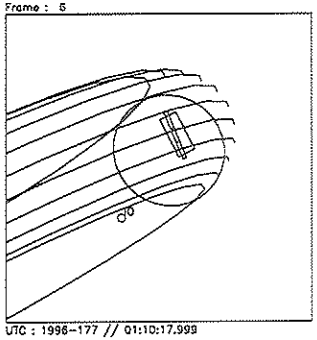

UTC : 1996-177 // 01:10:17.999
SCLK: 1/03494446:06:4:6

Frame : 7

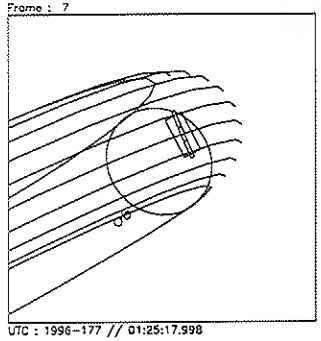

UTC : 1996-177 // 01:25:17.998
SCLK: 1/03494460:82:4:6

Frame : 8

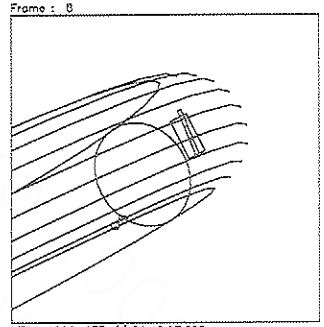

UTC : 1996-177 // 01:40:17.998
SCLK: 1/03494475:67:4:6

Start UTC_TIME : 1996-176 // 23:40:18.000
No End Time :
Start SCLK : 1/03494357:05:4:6

Target Body : JUPITER
Target Cone/Clock : 111.60/ 93.36 Deg
S/C to Body Center : 2620491. Km (36.654327 Rj)
Z-axis Pointing (Ra / Dec) : 102.80 / 25.00 Deg

Frame : 9

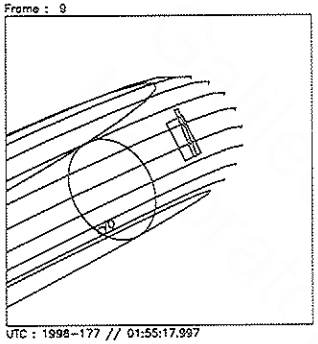

UTC : 1996-177 // 01:55:17.997
SCLK: 1/03494490:52:4:6

Frame : 10

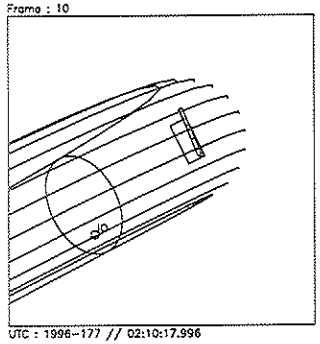

UTC : 1996-177 // 02:10:17.996
SCLK: 1/03494505:37:4:6

Frame : 11

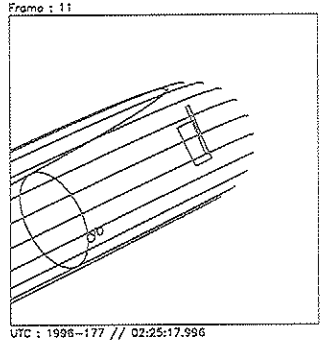

UTC : 1996-177 // 02:25:17.996
SCLK: 1/03494520:22:4:6

Frame : 12

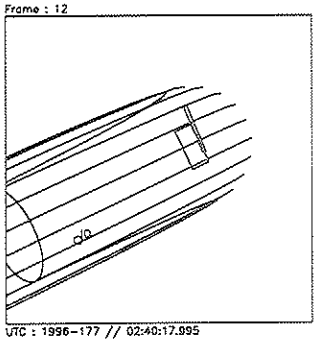

UTC : 1996-177 // 02:40:17.995
SCLK: 1/03494535:07:4:6

Frame : 13

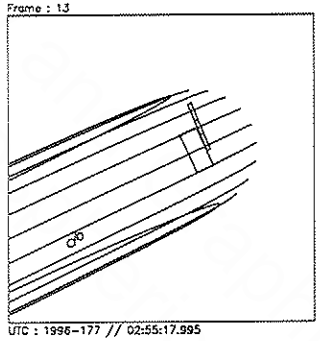

UTC : 1996-177 // 02:55:17.995
SCLK: 1/03494549:83:4:6

Frame : 14

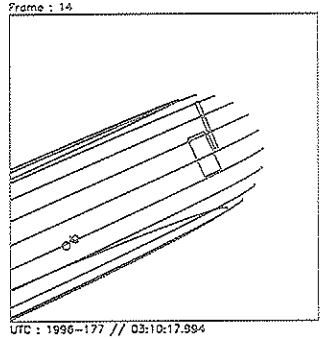

UTC : 1996-177 // 03:10:17.994
SCLK: 1/03494564:68:4:6

Start UTC_TIME : 1996-176 // 23:40:18.000
No End Time :
Start SCLK : 1/03494357:05:4:6

Target Body : JUPITER
Target Cone/Clock : 112.58/ 93.34 Deg
S/C to Body Center : 2560358. Km (35.813212 Rj)
Z-axis Pointing (Ra / Dec) : 102.80 / 25.00 Deg

ACTIVITY ID: G1TUG1MPRO04-

START TIME: 96-177/03:10:36.933

Activity ID: Orbit G1 **OAPEL** TUG1MPRO **SeqNo** 04-

Title UVS MIDNIGHT ANSA PROFILE 4 **Instrument** UVS

Requestor UVS-MWG/S.STEPHENS 37737 **Team** UVS **Working Group** MWG

Time System CDS **Load ID** G1A **Calendar Date** 06/25/96 **Week** 26

Start	JEE-CDS 00004115:00:0	96-177/03:10:36.933	JEE-002/21:20:43.333
End	JEE-CDS 00003871:00:0	96-177/07:17:19.600	JEE-002/17:14:00.666
Duration	00000244:00:0	000/04:06:42.667	000/04:06:42.667

Top Label G1TUG1MPRO04-

Bottom Label (UVS RTS Torus)

Plot Key UVS **Type** SCI

CDS Bytes 298 **Report Options** BOTH **Scan Platform** Yes

CDS Source PA **Spin State** DUAL **DMS** No

Observation Objective

UVS IO TORUS MIDNIGHT ANSA RADIAL PROFILE 4 (NO EUV):
From: 6.45 Rj (outside ribbon) at cone > 90 (ribbon at 5.74 Rj, Sys III W Long 323)
To: 5.05 Rj (inside ribbon) at fixed cone
Data rate: Instrument states usually last 60 RIMS; thus, 4.87 bps UVS (higher over ribbon)
OPTRTM/UVFLUSH STRATEGY (17,712 bits per UVS or EUV PACKET):
UVS deselected; thus, 60-RIM UVFLUSHes needed to PACKET UVS, after initial DISCRD
WAVELENGTHS (Angstroms):
Emission lines: UVS (S+ 1259, O+ 2471)
2POSN-22STEP F/G MINISCAN (UVS): F 2436.8-2501.0 (CTR 2470.4, STEP 275) [EVEN FRAMES],
G 1239.8-1272.1 (CTR 1256.7, STEP 81) [ODD FRAMES]
2POSN-1STEP G/G MINISCAN (UVS): G 1258.2 (STEP 82) [EVEN FRAMES],
G 1341.0 (STEP 136) [ODD FRAMES]
Strategy for MINISCANS: Alternate 22STEP and 1STEP for PWS quiet

Design Detail

Last modified 05/04/96

PSID	RIM:mf	CDS	PA
384BG	0	0	COMMENT [UVS RIM 0]
157BF	3	94	CMDRS (10+14*6) [PLAN DUR 241, EST UVS CMDS 6]
349BV	3:69	28	UVFLUSH [6UVRT, DISCRD, UVS]
165BE	4	36	TARGET [CONE 123.64, CLOCK 94.64]
	4		34UVS,D3,F,N,N,N,S,0,ON,OFF,ON,ON,OFF,NO,1,08,4D,00,6A [22STEP F/G]
349BX	62:69	28	UVFLUSH [6UVRT, PACKET, UVS]
	64		34UVS,C1,F,N,N,N,S,0,OFF,OFF,ON,ON,OFF,NO,1,7E,05,00,36 [1STEP G/G]
349BZ	102:69	28	UVFLUSH [6UVRT, PACKET, UVS]
	104		34UVS,D3,F,N,N,N,S,0,ON,OFF,ON,ON,OFF,NO,1,08,4D,00,6A [22STEP F/G]
349MA	142:69	28	UVFLUSH [6UVRT, PACKET, UVS]
	144		34UVS,C1,F,N,N,N,S,0,OFF,OFF,ON,ON,OFF,NO,1,7E,05,00,36 [1STEP G/G]
349MB	182:69	28	UVFLUSH [6UVRT, PACKET, UVS]
	184		34UVS,D3,F,N,N,N,S,0,ON,OFF,ON,ON,OFF,NO,1,08,4D,00,6A [22STEP F/G]
349MD	242:69	28	UVFLUSH [6UVRT, PACKET, UVS]
	244		34UVS,C1,F,N,N,N,S,0,OFF,OFF,ON,OFF,OFF,NO,1,2C,05,00,00 [HVOFF]

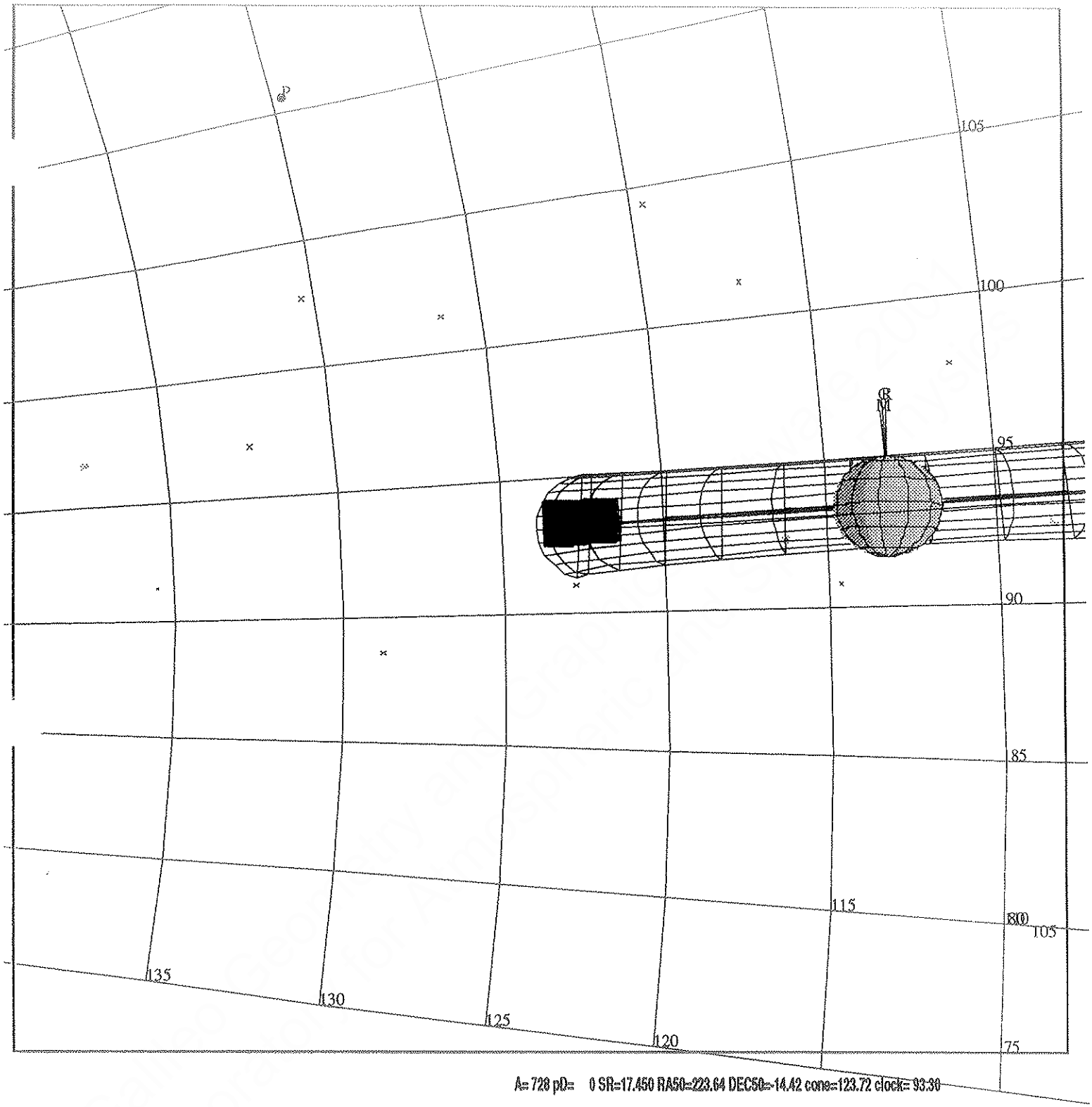

DESIGN G1.0 jerod: 2/15/1996 14:22:42

FILE:P.G1TUG1MPRO04

CENTRAL BODY:JUPITER III

MINI:m.G1TUG1MPRO04

C EPH:/DATA/NAVIO/T-960110-ALL.NS

PERIAPSIS: THINNING:NONE :UVS 1

START:JEE 96-180/00:31:20.266 -CDS 4111:00:0 BODY PLOT TIME:TARGET-TIME D= 0 S= 0.100

OBSERVATION:G1TUG1MPRO04 DESCRIP:Midnight Ansa Profile 4 Phase 2

Frame : 0

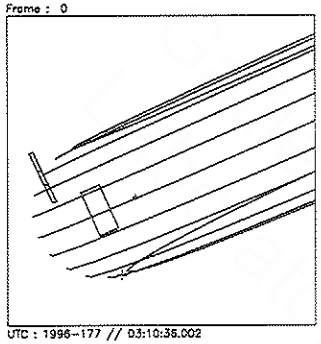

UTC : 1996-177 // 03:10:36.002
SCLK: 1/03494565:04:4:7

Frame : 1

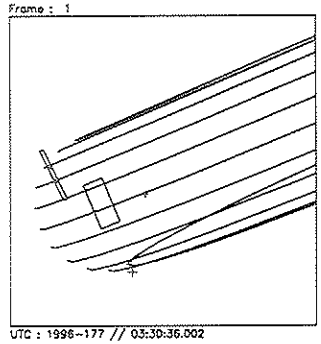

UTC : 1996-177 // 03:30:36.002
SCLK: 1/03494584:75:4:7

Frame : 2

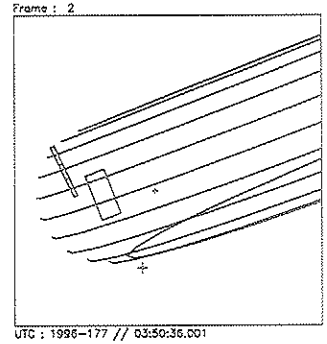

UTC : 1996-177 // 03:50:36.001
SCLK: 1/03494604:55:4:7

Frame : 3

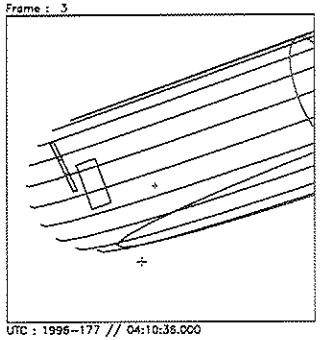

UTC : 1996-177 // 04:10:36.000
SCLK: 1/03494624:35:4:7

Frame : 4

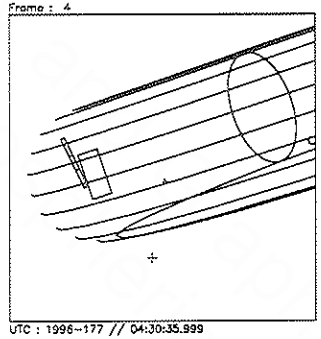

UTC : 1996-177 // 04:30:35.999
SCLK: 1/03494644:15:4:7

Frame : 5

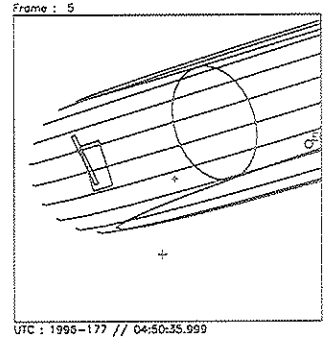

UTC : 1996-177 // 04:50:35.999
SCLK: 1/03494663:86:4:7

Frame : 6

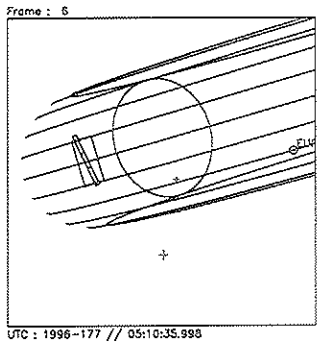

UTC : 1996-177 // 05:10:35.998
SCLK: 1/03494683:66:4:7

Frame : 7

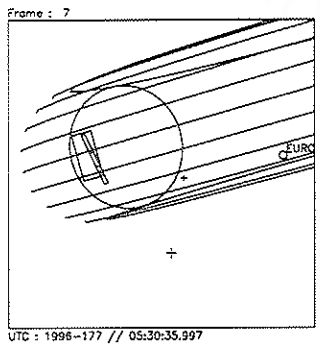

UTC : 1996-177 // 05:30:35.997
SCLK: 1/03494703:46:4:7

Frame : 8

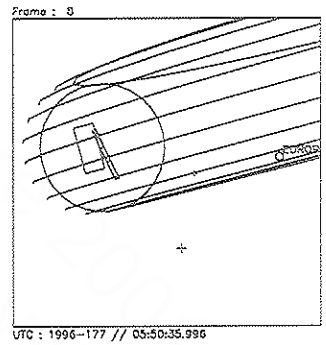

UTC : 1996-177 // 05:50:35.996
SCLK: 1/03494723:26:4:7

Start UTC_TIME : 1996-177 // 03:10:36.000
No End Time :
Start SCLK : 1/03494565:04:4:7

Target Body : JUPITER
Target Cone/Clock : 113.15/ 93.33 Deg
S/C to Body Center : 2526611. Km (35.341176 Rj)
Z-axis Pointing (Ra / Dec) : 102.80 / 25.00 Deg

Frame : 9

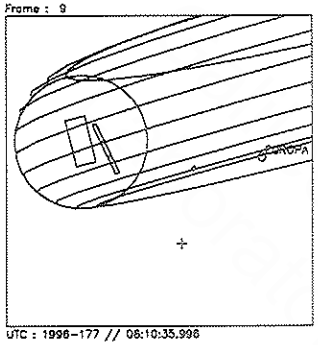

UTC : 1996-177 // 08:10:35.996
SCLK: 1/03494743:06:4:7

Frame : 10

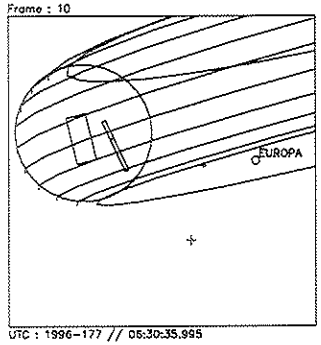

UTC : 1996-177 // 05:30:35.995
SCLK: 1/03494762:77:4:7

Frame : 11

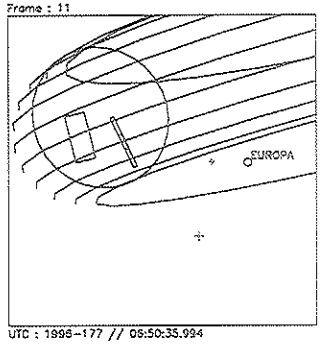

UTC : 1996-177 // 05:50:35.994
SCLK: 1/03494782:57:4:7

Frame : 12

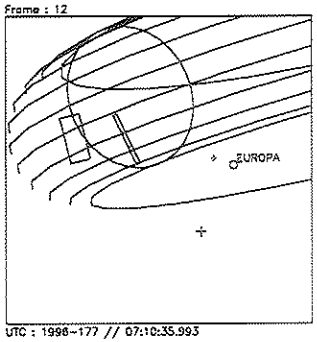

UTC : 1996-177 // 07:10:35.993
SCLK: 1/03494802:37:4:7

Start UTC_TIME : 1996-177 // 03:10:36.000
No End Time :
Start SCLK : 1/03494565:04:4:7

Target Body : JUPITER
Target Cone/Clock : 114.58/ 93.30 Deg
S/C to Body Center : 2445341. Km (34.204398 Rj)
Z-axis Pointing (Ra / Dec) : 102.80 / 25.00 Deg

Galileo Project Office
Jet Propulsion Laboratory
Pasadena, California

ACTIVITY ID: G1TUG1MPRO05-

START TIME: 96-177/08:52:22.266

Activity ID: Orbit G1 OAPEL TUG1MPRO SeqNo 05-

Title UVS MIDNIGHT ANSA PROFILE 5 **Instrument** UVS

Requestor UVS-MWG/S.STEPHENS 37737 **Team** UVS **Working Group** MWG

Time System CDS **Load ID** G1A **Calendar Date** 06/25/96 **Week** 26

Start	JEE-CDS 00003777:00:0	96-177/08:52:22.266	JEE-002/15:38:58.000
End	JEE-CDS 00003503:00:0	96-177/13:29:24.933	JEE-002/11:01:55.333
Duration	00000274:00:0	000/04:37:02.667	000/04:37:02.667

Top Label G1TUG1MPRO05-

Bottom Label (UVS RTS Torus)

Plot Key	UVS	**Type**	SCI		
CDS Bytes	298	**Report Options**	BOTH	**Scan Platform**	Yes
CDS Source	PA	**Spin State**	DUAL	**DMS**	No

Observation Objective

```
UVS IO TORUS MIDNIGHT ANSA RADIAL PROFILE 5 (NO EUV):
  From: 6.86 Rj (outside ribbon) at cone > 90 (ribbon at 6.00 Rj, Sys III W Long 174)
  To:   5.15 Rj (inside ribbon) at fixed cone
  Data rate: Instrument states usually last 60 RIMS; thus, 4.87 bps UVS (higher over ribbon)
OPTRTM/UVFLUSH STRATEGY (17,712 bits per UVS or EUV PACKET):
  UVS deselected; thus, 60-RIM UVFLUSHes needed to PACKET UVS, after initial DISCRD
WAVELENGTHS (Angstroms):
  Emission lines: UVS (S+ 1259, O+ 2471)
  2POSN-22STEP F/G MINISCAN (UVS):  F 2436.8-2501.0 (CTR 2470.4, STEP 275) [EVEN FRAMES],
                                    G 1239.8-1272.1 (CTR 1256.7, STEP 81) [ODD FRAMES]
  2POSN-1STEP G/G MINISCAN (UVS):   G 1258.2 (STEP 82) [EVEN FRAMES],
                                    G 1341.0 (STEP 136) [ODD FRAMES]
  Strategy for MINISCANS:   Alternate 22STEP and 1STEP for PWS quiet
```

Design Detail

Last modified 05/04/96

```
PSID    RIM:mf  CDS PA
-----------------------------------------------------------------------------------
384BH   0       0   COMMENT [UVS RIM 0]
157BH   3       94  CMDRS (10+14*6) [PLAN DUR 271, EST UVS CMDS 6]
349ME   3:69    28  UVFLUSH [6UVRT, DISCRD, UVS]
165BF   4       36  TARGET [CONE 127.92, CLOCK 92.65]
        4           34UVS,C1,F,N,N,N,S,0,OFF,OFF,ON,ON,OFF,NO,1,7E,05,00,36 [1STEP G/G]
349MG   92:69   28  UVFLUSH [6UVRT, PACKET, UVS]
        94          34UVS,D3,F,N,N,N,S,0,ON,OFF,ON,ON,OFF,NO,1,08,4D,00,6A [22STEP F/G]
349MI   132:69  28  UVFLUSH [6UVRT, PACKET, UVS]
        134         34UVS,C1,F,N,N,N,S,0,OFF,OFF,ON,ON,OFF,NO,1,7E,05,00,36 [1STEP G/G]
349MJ   172:69  28  UVFLUSH [6UVRT, PACKET, UVS]
        174         34UVS,D3,F,N,N,N,S,0,ON,OFF,ON,ON,OFF,NO,1,08,4D,00,6A [22STEP F/G]
349MK   212:69  28  UVFLUSH [6UVRT, PACKET, UVS]
        214         34UVS,C1,F,N,N,N,S,0,OFF,OFF,ON,ON,OFF,NO,1,7E,05,00,36 [1STEP G/G]
349MN   272:69  28  UVFLUSH [6UVRT, PACKET, UVS]
        274         34UVS,C1,F,N,N,N,S,0,OFF,OFF,ON,OFF,OFF,NO,1,2C,05,00,00 [HVOFF]
```

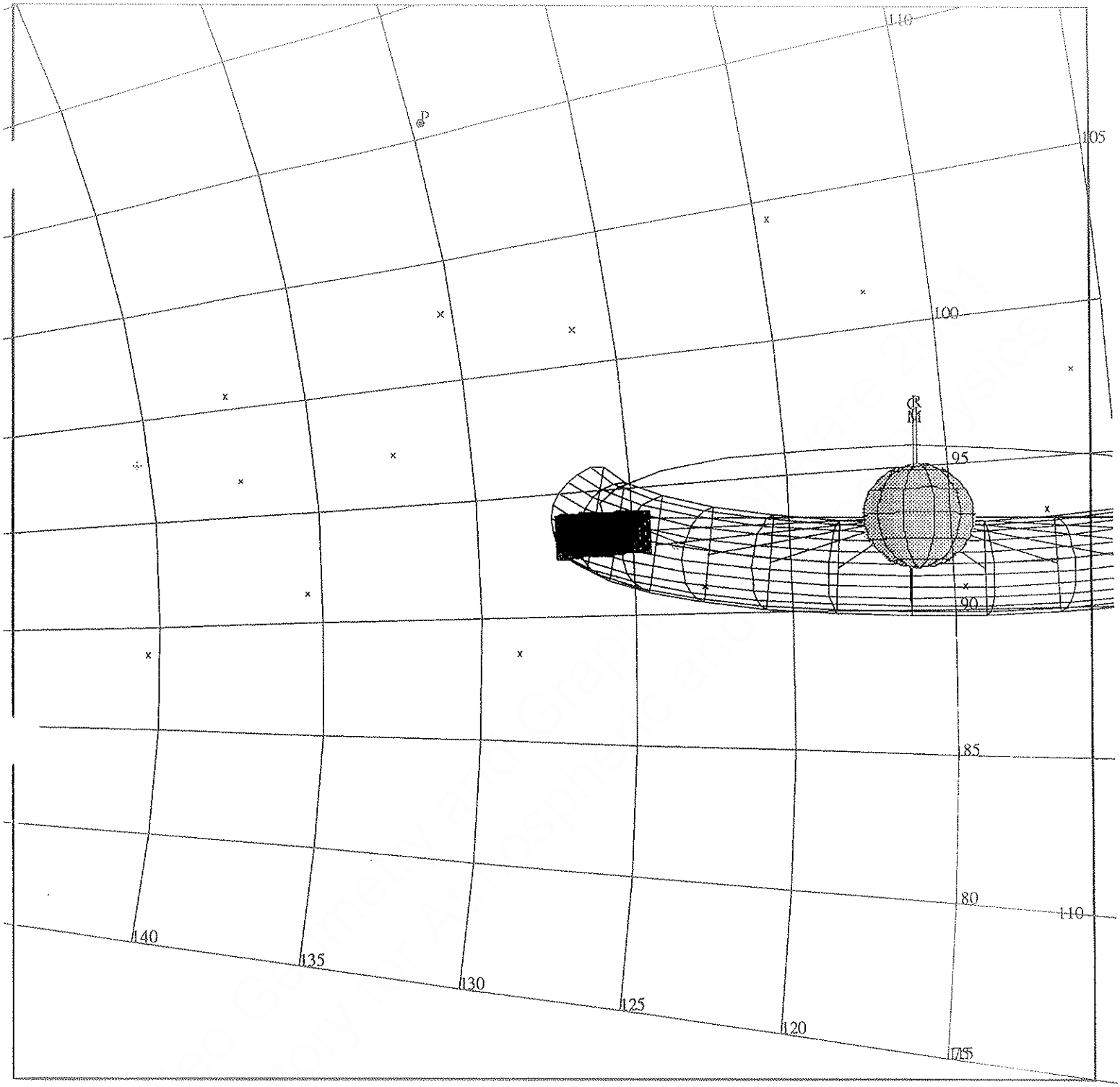

A= 728 pD= 49140 SR=17.450 RA50=227.25 DEC50=-15.76 cone=127.46 clock= 93.23

DESIGN G1.0 jerod: 2/15/1996 14:25:16

FILE:P.G1TUG1MPRO05

CENTRAL BODY:JUPITER III

MINI:m.G1TUG1MPRO05

☽ EPH:/DATA/NAVIO/T-960110-ALL.NS

PERIAPSIS: THINNING:NONE :UVS 1

START:JEE 96-180/00:31:20.266 -CDS 3773:00:0 BODY PLOT TIME:TARGET-TIME D=49140 S= 0.100

OBSERVATION:G1TUG1MPRO05 DESCRIP:Midnight Ansa Profile 5 Phase 2

Frame : 0

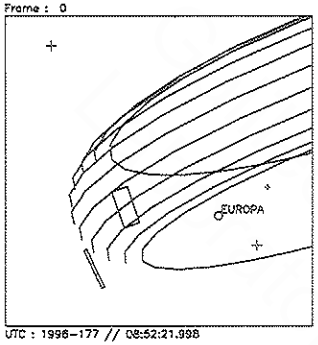

UTC : 1996-177 // 08:52:21.998
SCLK: 1/03494903:05:5:0

Frame : 1

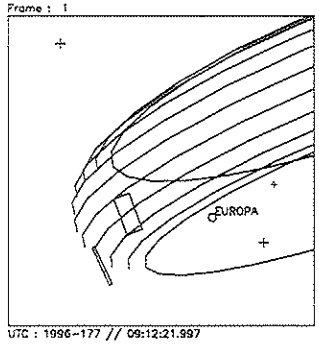

UTC : 1996-177 // 09:12:21.997
SCLK: 1/03494922:76:5:0

Frame : 2

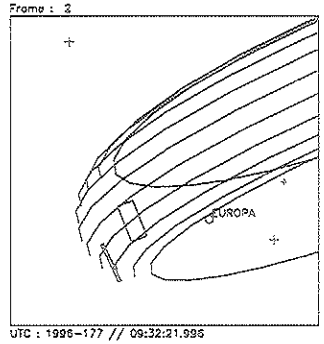

UTC : 1996-177 // 09:32:21.996
SCLK: 1/03494942:56:5:0

Frame : 3

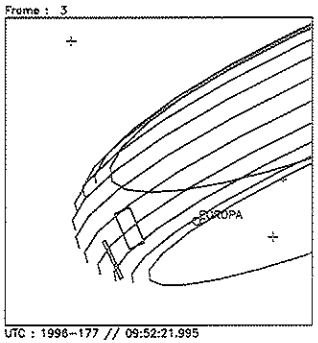

UTC : 1996-177 // 09:52:21.995
SCLK: 1/03494962:38:5:0

Frame : 4

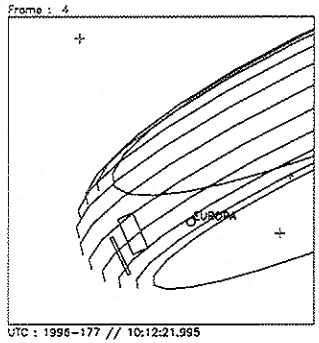

UTC : 1996-177 // 10:12:21.995
SCLK: 1/03494982:16:5:0

Frame : 5

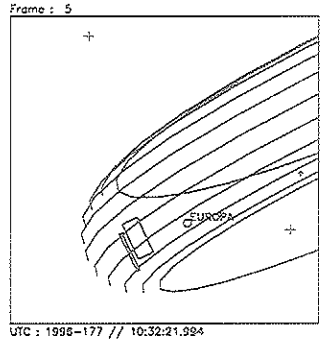

UTC : 1996-177 // 10:32:21.994
SCLK: 1/03495001:87:5:0

Frame : 6

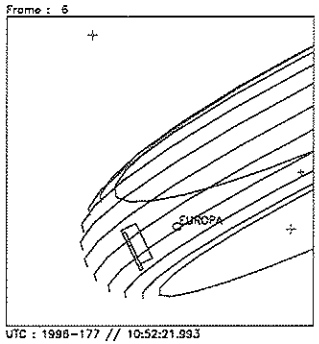

UTC : 1996-177 // 10:52:21.993
SCLK: 1/03495021:67:5:0

Frame : 7

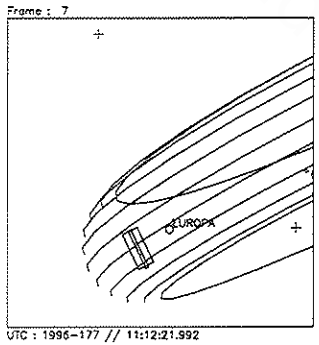

UTC : 1996-177 // 11:12:21.992
SCLK: 1/03495041:47:5:0

Frame : 8

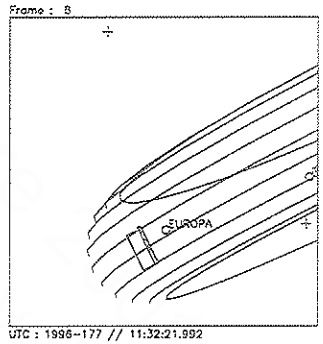

UTC : 1996-177 // 11:32:21.992
SCLK: 1/03495061:27:5:0

Start UTC_TIME : 1996-177 // 08:52:22.000
No End Time :
Start SCLK : 1/03494903:05:5:0

Target Body : JUPITER
Target Cone/Clock : 115.94/ 93.27 Deg
S/C to Body Center : 2371577. Km (33.172617 Rj)
Z-axis Pointing (Ra / Dec) : 102.80 / 25.00 Deg

Frame : 9

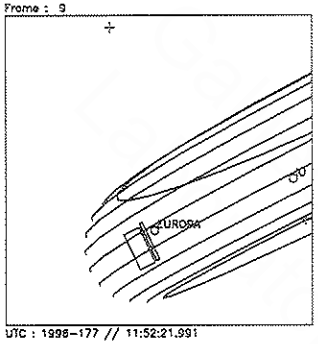

UTC : 1996-177 // 11:52:21.991
SCLK: 1/03495081:07:5:0

Frame : 10

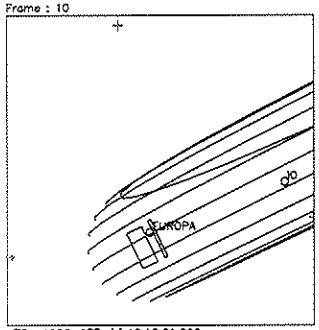

UTC : 1996-177 // 12:12:21.990
SCLK: 1/03495100:78:5:0

Frame : 11

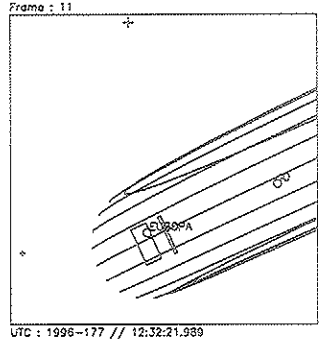

UTC : 1996-177 // 12:32:21.989
SCLK: 1/03495120:58:5:0

Frame : 12

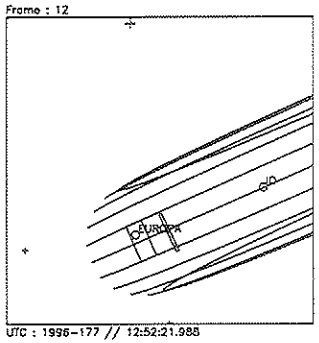

UTC : 1996-177 // 12:52:21.988
SCLK: 1/03495140:38:5:0

Frame : 13

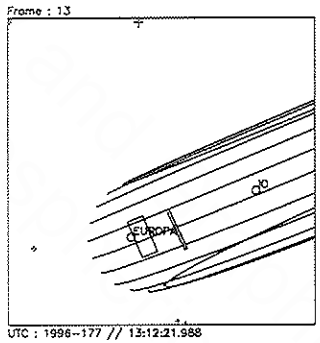

UTC : 1996-177 // 13:12:21.988
SCLK: 1/03495160:18:5:0

Frame : 14

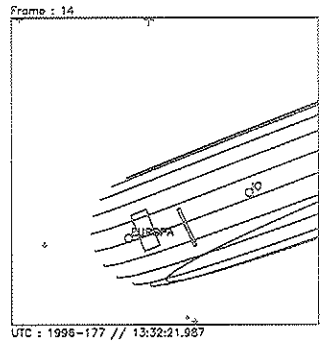

UTC : 1996-177 // 13:32:21.987
SCLK: 1/03495179:89:5:0

Start UTC_TIME : 1996-177 // 08:52:22.000
No End Time :
Start SCLK : 1/03494903:05:5:0

Target Body : JUPITER
Target Cone/Clock : 117.57/ 93.23 Deg
S/C to Body Center : 2288690. Km (32.013236 Rj)
Z-axis Pointing (Ra / Dec) : 102.80 / 25.00 Deg

ACTIVITY ID: G1TUG1NPRO02-

START TIME: 96-177/14:48:16.933

Activity ID: Orbit G1 OAPEL TUG1NPRO SeqNo 02-

Title UVS NOON ANSA PROFILE 2 **Instrument** UVS

Requestor UVS-MWG/S.STEPHENS 37737 **Team** UVS **Working Group** MWG

Time System CDS **Load ID** G1A **Calendar Date** 06/25/96 **Week** 26

Start	JEE-CDS 00003425:00:0	96-177/14:48:16.933	JEE-002/09:43:03.333
End	JEE-CDS 00003306:00:0	96-177/16:48:36.266	JEE-002/07:42:44.000
Duration	00000119:00:0	000/02:00:19.333	000/02:00:19.333

Top Label G1TUG1NPRO02-

Bottom Label (UVS RTS Torus)

Plot Key	UVS	**Type**	SCI		
CDS Bytes	172	**Report Options**	BOTH	**Scan Platform**	Yes
CDS Source	PA	**Spin State**	DUAL	**DMS**	No

Observation Objective

UVS IO TORUS NOON ANSA RADIAL PROFILE 2 (NO EUV):
From: 5.57 Rj (inside ribbon) at cone > 90 (ribbon at 5.80 Rj, Sys III W Long 184)
To: 6.04 Rj (outside ribbon) at fixed cone
Data rate: Instrument states usually last 60 RIMS; thus, 4.87 bps UVS
OPTRTM/UVFLUSH STRATEGY (17,712 bits per UVS or EUV PACKET):
UVS deselected; thus, 60-RIM UVFLUSHes needed to PACKET UVS, after initial DISCRD
WAVELENGTHS (Angstroms):
Emission lines: UVS (S+ 1259, O+ 2471)
2POSN-22STEP F/G MINISCAN (UVS): F 2436.8-2501.0 (CTR 2470.4, STEP 275) [EVEN FRAMES],
G 1239.8-1272.1 (CTR 1256.7, STEP 81) [ODD FRAMES]
2POSN-1STEP G/G MINISCAN (UVS): G 1258.2 (STEP 82) [EVEN FRAMES],
G 1341.0 (STEP 136) [ODD FRAMES]
Strategy for MINISCANS: Alternate 22STEP and 1STEP for PWS quiet

Design Detail

Last modified 05/04/96

PSID	RIM:mf	CDS	PA
384BI	0	0	COMMENT [UVS RIM 0]
157BJ	3	52	CMDRS (10+14*3) [PLAN DUR 116, EST UVS CMDS 3]
349MO	3:69	28	UVFLUSH [6UVRT, DISCRD, UVS]
165BG	4	36	TARGET [CONE 109.03, CLOCK 91.53]
	4		34UVS,D3,F,N,N,N,S,0,ON,OFF,ON,ON,OFF,NO,1,08,4D,00,6A [22STEP F/G]
349MQ	62:69	28	UVFLUSH [6UVRT, PACKET, UVS]
	64		34UVS,C1,F,N,N,N,S,0,OFF,OFF,ON,ON,OFF,NO,1,7E,05,00,36 [1STEP G/G]
349MS	117:69	28	UVFLUSH [6UVRT, PACKET, UVS]
	119		34UVS,C1,F,N,N,N,S,0,OFF,OFF,ON,OFF,OFF,NO,1,2C,05,00,00 [HVOFF]

Frame : 0

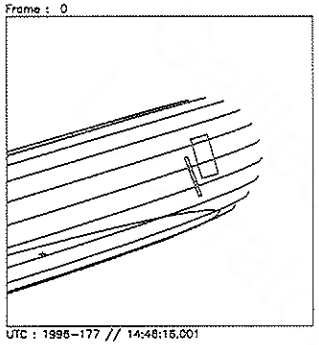

UTC : 1996-177 // 14:48:16.001
SCLK: 1/03495255:04:5:2

Frame : 1

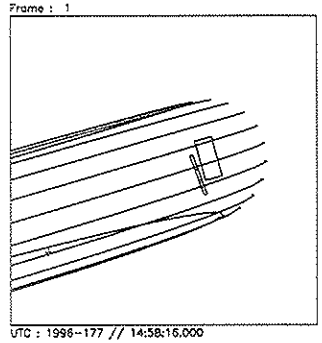

UTC : 1996-177 // 14:58:16.000
SCLK: 1/03495264:85:5:2

Frame : 2

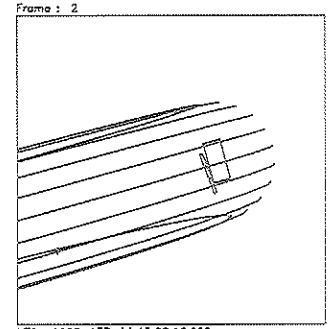

UTC : 1996-177 // 15:08:16.000
SCLK: 1/03495274:75:5:2

Frame : 3

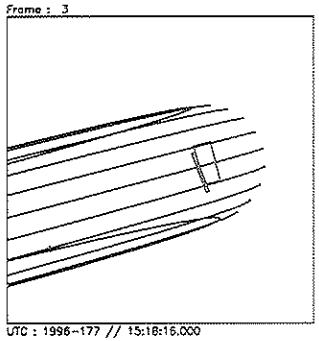

UTC : 1996-177 // 15:18:16.000
SCLK: 1/03495284:65:5:2

Frame : 4

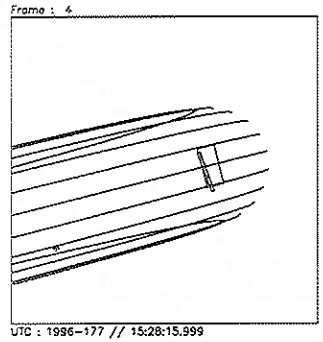

UTC : 1996-177 // 15:28:15.999
SCLK: 1/03495294:55:5:2

Frame : 5

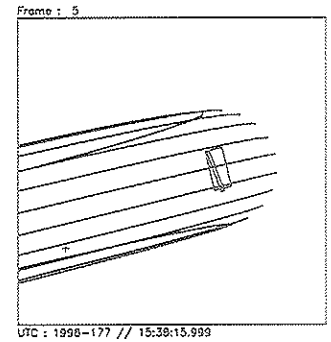

UTC : 1996-177 // 15:38:15.999
SCLK: 1/03495304:45:5:2

Frame : 6

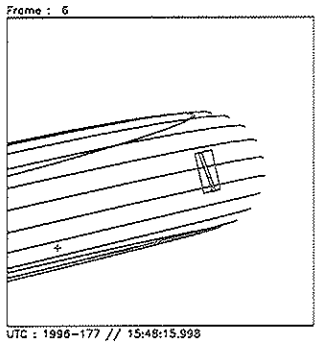

UTC : 1996-177 // 15:48:15.998
SCLK: 1/03495314:35:5:2

Frame : 7

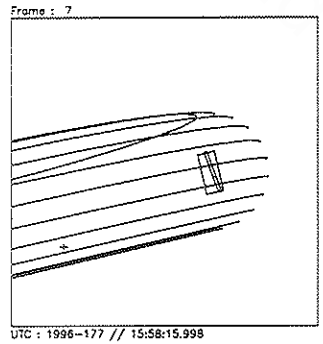

UTC : 1996-177 // 15:58:15.998
SCLK: 1/03495324:25:5:2

Frame : 8

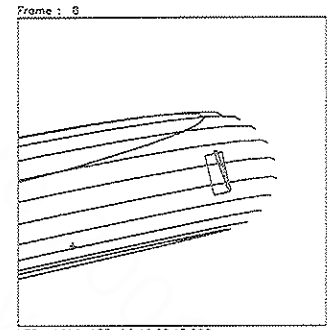

UTC : 1996-177 // 16:08:15.998
SCLK: 1/03495334:15:5:2

Start UTC_TIME : 1996-177 // 14:48:16.000
No End Time :
Start SCLK : 1/03495255:04:5:2

Target Body : JUPITER
Target Cone/Clock : 119.27/ 93.19 Deg
S/C to Body Center : 2206874. Km (30.868829 Rj)
Z-axis Pointing (Ra / Dec) : 102.80 / 25.00 Deg

Frame : 9

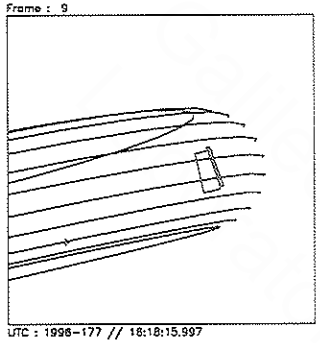

UTC : 1996-177 // 18:18:15.997
SCLK: 1/03495344:05:5:2

Frame : 10

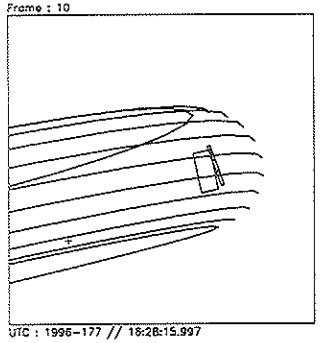

UTC : 1996-177 // 18:28:15.997
SCLK: 1/03495353:86:5:2

Frame : 11

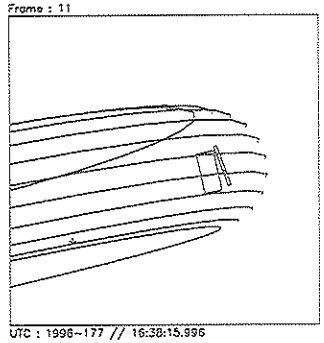

UTC : 1996-177 // 18:38:15.996
SCLK: 1/03495363:76:5:2

Frame : 12

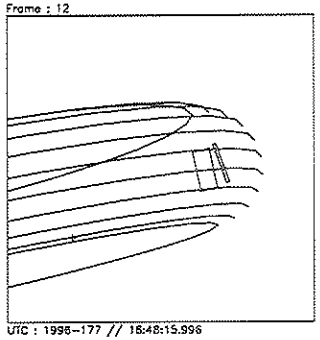

UTC : 1996-177 // 18:48:15.996
SCLK: 1/03495373:66:5:2

Start UTC_TIME : 1996-177 // 14:48:16.000
No End Time :
Start SCLK : 1/03495255:04:5:2

Target Body : JUPITER
Target Cone/Clock : 120.19/ 93.17 Deg
S/C to Body Center : 2164704. Km (30.278973 Rj)
Z-axis Pointing (Ra / Dec) : 102.80 / 25.00 Deg

ACTIVITY ID: G1TUG1MPRO06-

START TIME: 96-177/17:40:10.266

Activity ID: Orbit G1 OAPEL TUG1MPRO SeqNo 06-

Title UVS MIDNIGHT ANSA PROFILE 6 **Instrument** UVS

Requestor UVS-MWG/S.STEPHENS 37737 **Team** UVS **Working Group** MWG

Time System CDS **Load ID** G1A **Calendar Date** 06/25/96 **Week** 26

Start	JEE-CDS 00003255:00:0	96-177/17:40:10.266	JEE-002/06:51:10.000
End	JEE-CDS 00003118:00:0	96-177/19:58:41.600	JEE-002/04:32:38.666
Duration	00000137:00:0	000/02:18:31.334	000/02:18:31.334

Top Label G1TUG1MPRO06-

Bottom Label (UVS RTS Torus)

Plot Key UVS **Type** SCI

CDS Bytes 172 **Report Options** BOTH **Scan Platform** Yes

CDS Source PA **Spin State** DUAL **DMS** No

Observation Objective

UVS IO TORUS MIDNIGHT ANSA RADIAL PROFILE 6 (NO EUV):
From: 6.42 Rj (outside ribbon) at cone > 90 (ribbon at 5.96 Rj, Sys III W Long 87)
To: 5.50 Rj (inside ribbon) at fixed cone
Data rate: Instrument states usually last 60 RIMS; thus, 4.87 bps UVS
OPTRTM/UVFLUSH STRATEGY (17,712 bits per UVS or EUV PACKET):
UVS deselected; thus, 60-RIM UVFLUSHes needed to PACKET UVS, after initial DISCRD
WAVELENGTHS (Angstroms):
Emission lines: UVS (S+ 1259, O+ 2471)
2POSN-22STEP F/G MINISCAN (UVS): F 2436.8-2501.0 (CTR 2470.4, STEP 275) [EVEN FRAMES],
G 1239.8-1272.1 (CTR 1256.7, STEP 81) [ODD FRAMES]
2POSN-1STEP G/G MINISCAN (UVS): G 1258.2 (STEP 82) [EVEN FRAMES],
G 1341.0 (STEP 136) [ODD FRAMES]
Strategy for MINISCANS: Alternate 22STEP and 1STEP for PWS quiet

Design Detail

Last modified 05/04/96

PSID	RIM:mf	CDS	PA
384BJ	0	0	COMMENT [UVS RIM 0]
157BK	3	52	CMDRS (10+14*3) [PLAN DUR 134, EST UVS CMDS 3]
349MT	3:69	28	UVFLUSH [6UVRT, DISCRD, UVS]
165BH	4	36	TARGET [CONE 133.52, CLOCK 94.85]
	4		34UVS,C1,F,N,N,N,S,0,OFF,OFF,ON,ON,OFF,NO,1,7E,05,00,36 [1STEP G/G]
349MV	75:69	28	UVFLUSH [6UVRT, PACKET, UVS]
	77		34UVS,D3,F,N,N,N,S,0,ON,OFF,ON,ON,OFF,NO,1,08,4D,00,6A [22STEP F/G]
349MX	135:69	28	UVFLUSH [6UVRT, PACKET, UVS]
	137		34UVS,C1,F,N,N,N,S,0,OFF,OFF,ON,OFF,OFF,NO,1,2C,05,00,00 [HVOFF]

Frame : 0

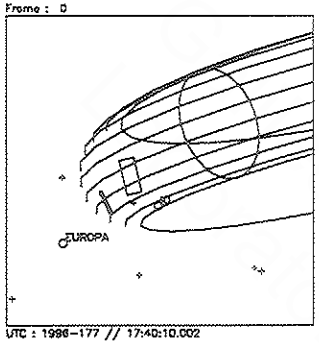

UTC : 1996-177 // 17:40:10.002
SCLK: 1/03495425:05:5:3

Frame : 1

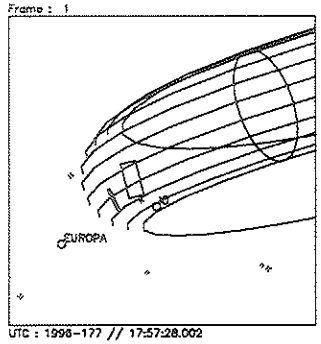

UTC : 1996-177 // 17:57:28.002
SCLK: 1/03495442:15:5:3

Frame : 2

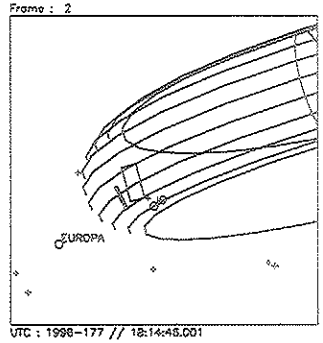

UTC : 1996-177 // 18:14:46.001
SCLK: 1/03495459:25:5:3

Frame : 3

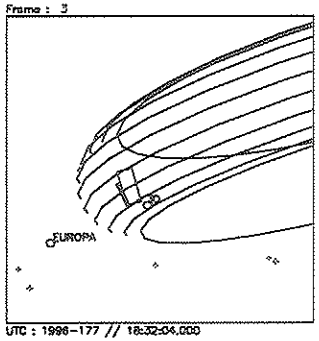

UTC : 1996-177 // 18:32:04.000
SCLK: 1/03495476:35:5:3

Frame : 4

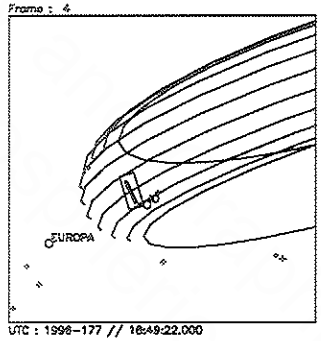

UTC : 1996-177 // 18:49:22.000
SCLK: 1/03495493:45:5:3

Frame : 5

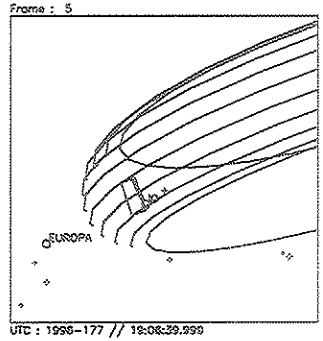

UTC : 1996-177 // 19:06:39.999
SCLK: 1/03495510:55:5:3

Frame : 6

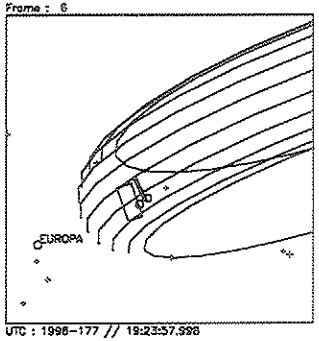

UTC : 1996-177 // 19:23:57.998
SCLK: 1/03495527:65:5:3

Frame : 7

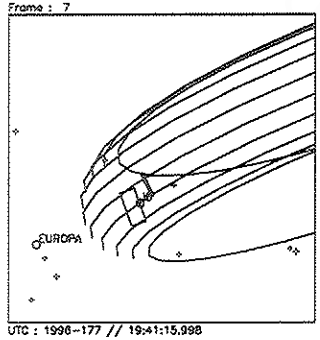

UTC : 1996-177 // 19:41:15.998
SCLK: 1/03495544:75:5:3

Frame : 8

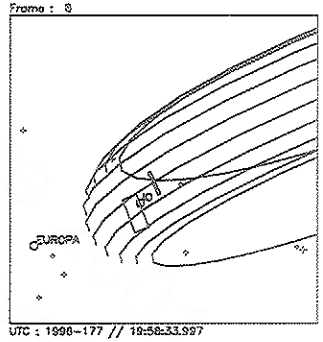

UTC : 1996-177 // 19:58:33.997
SCLK: 1/03495561:85:5:3

Start UTC_TIME : 1996-177 // 17:40:10.000
No End Time :
Start SCLK : 1/03495425:05:5:3

Target Body : JUPITER
Target Cone/Clock : 121.06/ 93.15 Deg
S/C to Body Center : 2126151. Km (29.739705 Rj)
Z-axis Pointing (Ra / Dec) : 102.80 / 25.00 Deg

ACTIVITY ID: G1TUG1NPRO03-

START TIME: 96-177/19:58:41.600

Activity ID: Orbit G1 OAPEL TUG1NPRO SeqNo 03-

Title UVS NOON ANSA PROFILE 3 **Instrument** UVS

Requestor UVS-MWG/S.STEPHENS 37737 **Team** UVS **Working Group** MWG

Time System CDS **Load ID** G1A **Calendar Date** 06/25/96 **Week** 26

Start	JEE-CDS 00003118:00:0	96-177/19:58:41.600	JEE-002/04:32:38.666
End	JEE-CDS 00002754:00:0	96-178/02:06:44.266	JEE-001/22:24:36.000
Duration	00000364:00:0	000/06:08:02.666	000/06:08:02.666

Top Label G1TUG1NPRO03-

Bottom Label (UVS RTS Torus)

Plot Key UVS **Type** SCI

CDS Bytes 382 **Report Options** BOTH **Scan Platform** Yes

CDS Source PA **Spin State** DUAL **DMS** No

Observation Objective

UVS IO TORUS NOON ANSA RADIAL PROFILE 3 (NO EUV):
From: 4.91 Rj (inside ribbon) at cone > 90 (ribbon at 5.74 Rj, Sys III W Long 85)
To: 6.55 Rj (outside ribbon) at fixed cone
Data rate: Instrument states usually last 60 RIMS; thus, 4.87 bps UVS (higher over ribbon)
OPTRTM/UVFLUSH STRATEGY (17,712 bits per UVS or EUV PACKET):
UVS deselected; thus, 60-RIM UVFLUSHes needed to PACKET UVS, after initial DISCRD
WAVELENGTHS (Angstroms):
Emission lines: UVS (S+ 1259, O+ 2471)
2POSN-22STEP F/G MINISCAN (UVS): F 2436.8-2501.0 (CTR 2470.4, STEP 275) [EVEN FRAMES],
G 1239.8-1272.1 (CTR 1256.7, STEP 81) [ODD FRAMES]
2POSN-1STEP G/G MINISCAN (UVS): G 1258.2 (STEP 82) [EVEN FRAMES],
G 1341.0 (STEP 136) [ODD FRAMES]
Strategy for MINISCANS: Alternate 22STEP and 1STEP for PWS quiet

Design Detail

Last modified 05/04/96

PSID	RIM:mf	CDS	PA
384BK	0	0	COMMENT [UVS RIM 0]
157BL	3	122	CMDRS (10+14*8) [PLAN DUR 361, EST UVS CMDS 8]
349MZ	3:69	28	UVFLUSH [6UVRT, DISCRD, UVS]
165BI	4	36	TARGET [CONE 112.85, CLOCK 93.20]
	4		34UVS,C1,F,N,N,N,S,0,OFF,OFF,ON,ON,OFF,NO,1,7E,05,00,36 [1STEP G/G]
349NB	62:69	28	UVFLUSH [6UVRT, PACKET, UVS]
	64		34UVS,D3,F,N,N,N,S,0,ON,OFF,ON,ON,OFF,NO,1,08,4D,00,6A [22STEP F/G]
349ND	122:69	28	UVFLUSH [6UVRT, PACKET, UVS]
	124		34UVS,C1,F,N,N,N,S,0,OFF,OFF,ON,ON,OFF,NO,1,7E,05,00,36 [1STEP G/G]
349NF	162:69	28	UVFLUSH [6UVRT, PACKET, UVS]
	164		34UVS,D3,F,N,N,N,S,0,ON,OFF,ON,ON,OFF,NO,1,08,4D,00,6A [22STEP F/G]
349NG	202:69	28	UVFLUSH [6UVRT, PACKET, UVS]
	204		34UVS,C1,F,N,N,N,S,0,OFF,OFF,ON,ON,OFF,NO,1,7E,05,00,36 [1STEP G/G]
349NH	242:69	28	UVFLUSH [6UVRT, PACKET, UVS]
	244		34UVS,D3,F,N,N,N,S,0,ON,OFF,ON,ON,OFF,NO,1,08,4D,00,6A [22STEP F/G]
349NJ	302:69	28	UVFLUSH [6UVRT, PACKET, UVS]
	304		34UVS,C1,F,N,N,N,S,0,OFF,OFF,ON,ON,OFF,NO,1,7E,05,00,36 [1STEP G/G]
349NL	362:69	28	UVFLUSH [6UVRT, PACKET, UVS]

Frame : 0

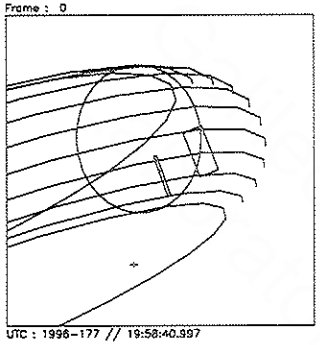

UTC : 1996-177 // 19:58:40.997
SCLK: 1/03495562:05:0:3

Frame : 1

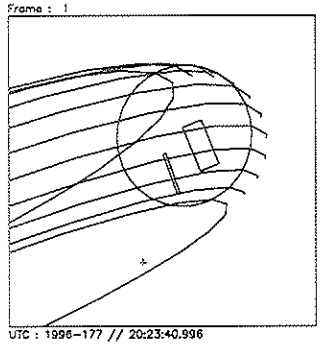

UTC : 1996-177 // 20:23:40.996
SCLK: 1/03495585:71:0:3

Frame : 2

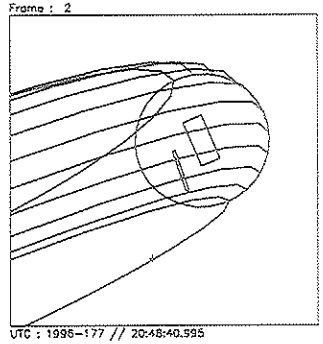

UTC : 1996-177 // 20:48:40.995
SCLK: 1/03495611:46:0:3

Frame : 3

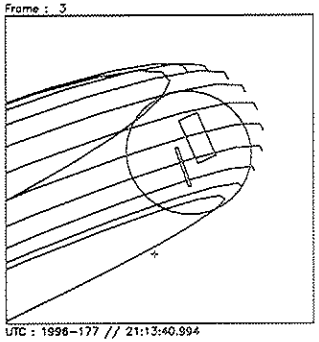

UTC : 1996-177 // 21:13:40.994
SCLK: 1/03495636:21:0:3

Frame : 4

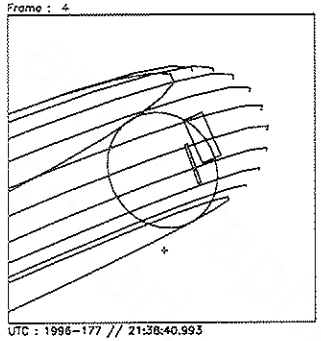

UTC : 1996-177 // 21:38:40.993
SCLK: 1/03495660:87:0:3

Frame : 5

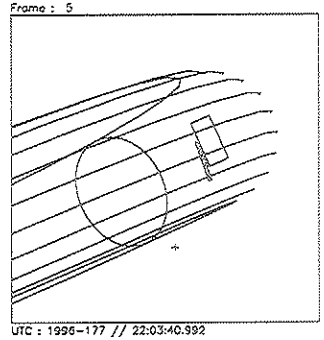

UTC : 1996-177 // 22:03:40.992
SCLK: 1/03495685:62:0:3

Frame : 6

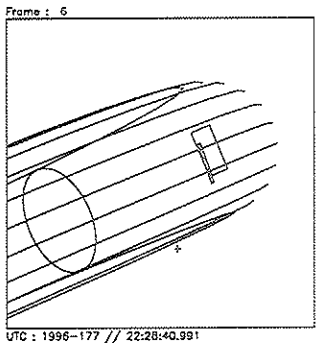

UTC : 1996-177 // 22:28:40.991
SCLK: 1/03495710:37:0:3

Frame : 7

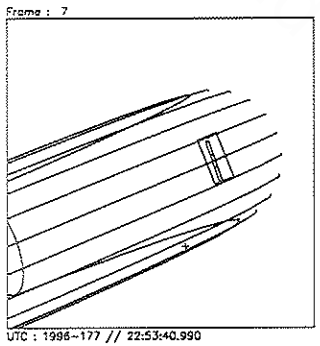

UTC : 1996-177 // 22:53:40.990
SCLK: 1/03495735:12:0:3

Frame : 8

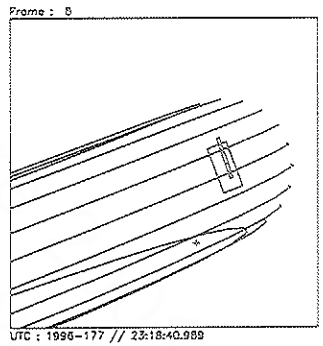

UTC : 1996-177 // 23:18:40.989
SCLK: 1/03495759:78:0:3

Start UTC_TIME : 1996-177 // 19:58:41.000
No End Time :
Start SCLK : 1/03495562:05:0:3

Target Body : JUPITER
Target Cone/Clock : 122.61/ 93.11 Deg
S/C to Body Center : 2060567. Km (28.822341 Rj)
Z-axis Pointing (Ra / Dec) : 102.80 / 25.00 Deg

Frame : 9

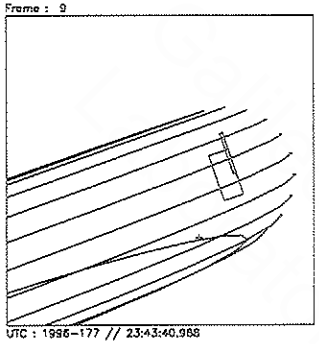

UTC : 1996-177 // 23:43:40.988
SCLK: 1/03495784:53:0:3

Frame : 10

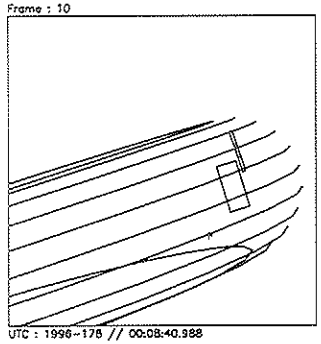

UTC : 1996-178 // 00:08:40.988
SCLK: 1/03495809:28:0:3

Frame : 11

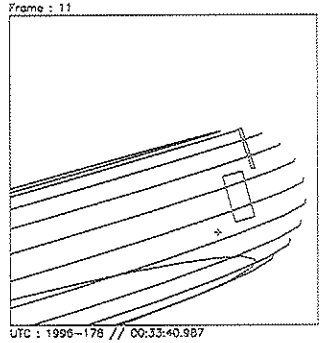

UTC : 1996-178 // 00:33:40.987
SCLK: 1/03495834:03:0:3

Frame : 12

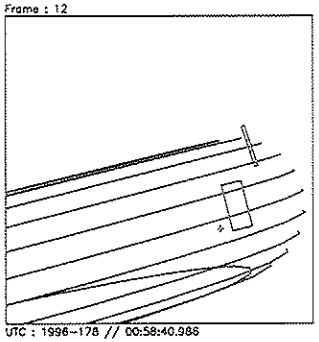

UTC : 1996-178 // 00:58:40.986
SCLK: 1/03495858:69:0:3

Frame : 13

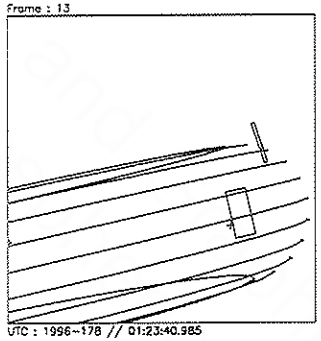

UTC : 1996-178 // 01:23:40.985
SCLK: 1/03495883:44:0:3

Frame : 14

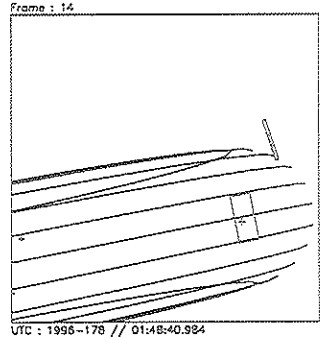

UTC : 1996-178 // 01:48:40.984
SCLK: 1/03495908:19:0:3

Frame : 15

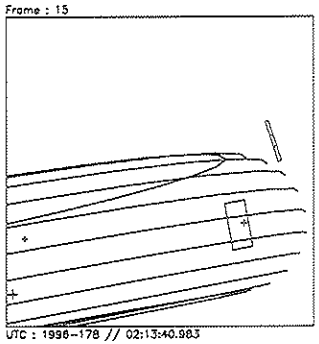

UTC : 1996-178 // 02:13:40.983
SCLK: 1/03495932:85:0:3

Start UTC_TIME : 1996-177 // 19:58:41.000
No End Time :
Start SCLK : 1/03495562:05:0:3

Target Body : JUPITER
Target Cone/Clock : 125.35/ 93.04 Deg
S/C to Body Center : 1953064. Km (27.318630 Rj)
Z-axis Pointing (Ra / Dec) : 102.80 / 25.00 Deg

ACTIVITY ID: G1TUG1NPRO41-

START TIME: 96-178/02:06:44.266

Activity ID: **Orbit** G1 **OAPEL** TUG1NPRO **SeqNo** 41-

Title UVS NOON ANSA PROFILE 4-1 **Instrument** UVS

Requestor UVS-MWG/S.STEPHENS 37737 **Team** UVS **Working Group** MWG

Time System CDS **Load ID** G1A **Calendar Date** 06/26/96 **Week** 26

Start	JEE-CDS 00002754:00:0	96-178/02:06:44.266	JEE-001/22:24:36.000
End	JEE-CDS 00002630:00:0	96-178/04:12:06.933	JEE-001/20:19:13.333
Duration	00000124:00:0	000/02:05:22.667	000/02:05:22.667

Top Label G1TUG1NPRO41-

Bottom Label (UVS RTS Torus)

Plot Key UVS **Type** SCI

CDS Bytes 172 **Report Options** BOTH **Scan Platform** Yes

CDS Source PA **Spin State** DUAL **DMS** No

Observation Objective

UVS IO TORUS NOON ANSA RADIAL PROFILE 4 (PART 1) (NO EUV):
From: 4.76 Rj (inside ribbon) at cone > 90 (ribbon at 5.63 Rj, Sys III W Long 290)
To: 5.37 Rj at fixed cone
Data rate: Instrument states last 60 RIMS; thus, 4.87 bps UVS
OPTRTM/UVFLUSH STRATEGY (17,712 bits per UVS or EUV PACKET):
UVS deselected; thus, 60-RIM UVFLUSHes needed to PACKET UVS, after initial DISCRD
WAVELENGTHS (Angstroms):
Emission lines: UVS (S+ 1259, O+ 2471)
2POSN-22STEP F/G MINISCAN (UVS): F 2436.8-2501.0 (CTR 2470.4, STEP 275) [EVEN FRAMES],
G 1239.8-1272.1 (CTR 1256.7, STEP 81) [ODD FRAMES]
2POSN-1STEP G/G MINISCAN (UVS): G 1258.2 (STEP 82) [EVEN FRAMES],
G 1341.0 (STEP 136) [ODD FRAMES]
Strategy for MINISCANS: Alternate 22STEP and 1STEP for PWS quiet

Design Detail

Last modified 05/04/96

PSID	RIM:mf	CDS	PA
384BL	0	0	COMMENT [UVS RIM 0]
157BN	3	52	CMDRS (10+14*3) [PLAN DUR 121, EST UVS CMDS 3]
349NM	3:69	28	UVFLUSH [6UVRT, DISCRD, UVS]
165BJ	4	36	TARGET [CONE 116.92, CLOCK 92.29]
	4		34UVS,D3,F,N,N,N,S,0,ON,OFF,ON,ON,OFF,NO,1,08,4D,00,6A [22STEP F/G]
349NO	62:69	28	UVFLUSH [6UVRT, PACKET, UVS]
	64		34UVS,C1,F,N,N,N,S,0,OFF,OFF,ON,ON,OFF,NO,1,7E,05,00,36 [1STEP G/G]
349NQ	122:69	28	UVFLUSH [6UVRT, PACKET, UVS]
	124		34UVS,C1,F,N,N,N,S,0,OFF,OFF,ON,OFF,OFF,NO,1,2C,05,00,00 [HVOFF]

Frame : 0

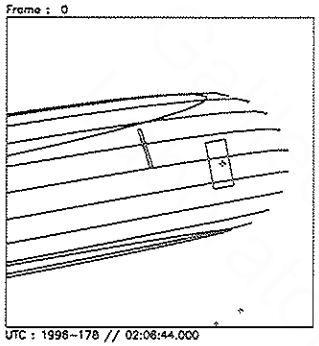

UTC : 1996-178 // 02:06:44.000
SCLK: 1/03495926:05:5:5

Frame : 1

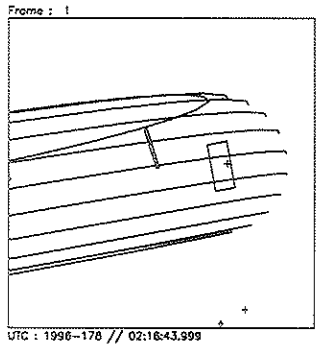

UTC : 1996-178 // 02:16:43.999
SCLK: 1/03495935:86:5:5

Frame : 2

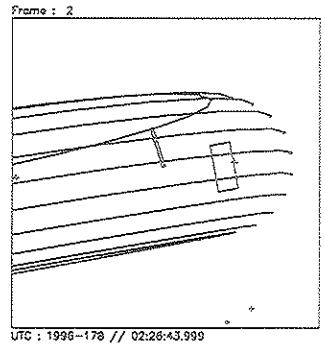

UTC : 1996-178 // 02:26:43.999
SCLK: 1/03495945:76:5:5

Frame : 3

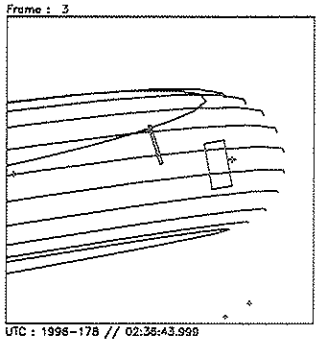

UTC : 1996-178 // 02:36:43.999
SCLK: 1/03495955:68:5:5

Frame : 4

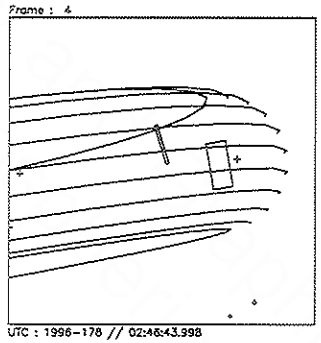

UTC : 1996-178 // 02:46:43.998
SCLK: 1/03495965:56:5:5

Frame : 5

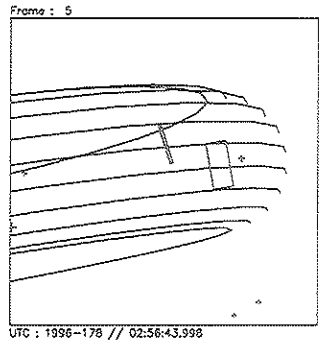

UTC : 1996-178 // 02:56:43.998
SCLK: 1/03495975:46:5:5

Frame : 6

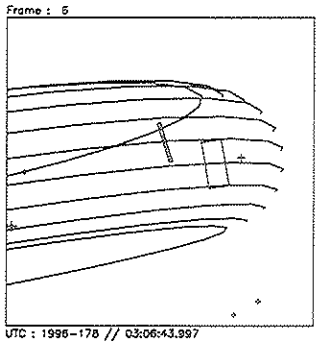

UTC : 1996-178 // 03:06:43.997
SCLK: 1/03495985:36:5:5

Frame : 7

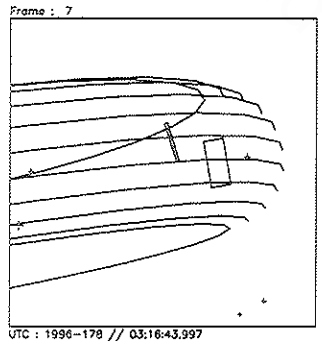

UTC : 1996-178 // 03:16:43.997
SCLK: 1/03495995:26:5:5

Frame : 8

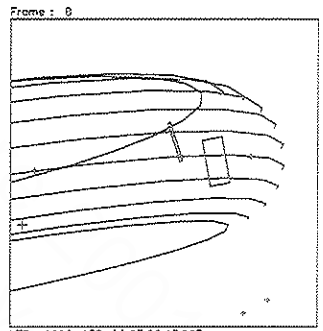

UTC : 1996-178 // 03:26:43.997
SCLK: 1/03496005:16:5:5

Start UTC_TIME : 1996-178 // 02:06:44.000
No End Time :
Start SCLK : 1/03495926:05:5:5

Target Body : JUPITER
Target Cone/Clock : 127.25/ 92.99 Deg
S/C to Body Center : 1884137. Km (26.354509 Rj)
Z-axis Pointing (Ra / Dec) : 102.80 / 25.00 Deg

Frame : 9

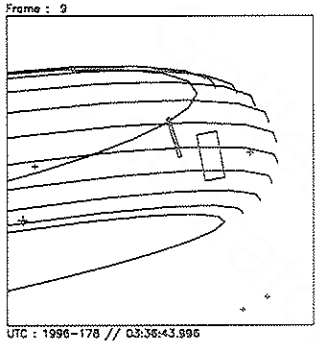

UTC : 1996-178 // 03:36:43.996
SCLK: 1/03496015:06:5:5

Frame : 10

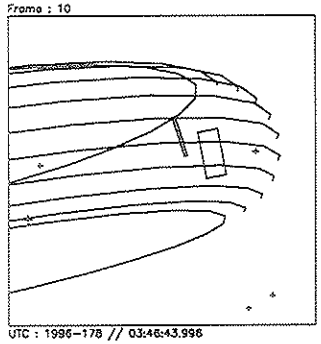

UTC : 1996-178 // 03:46:43.996
SCLK: 1/03496024:07:5:5

Frame : 11

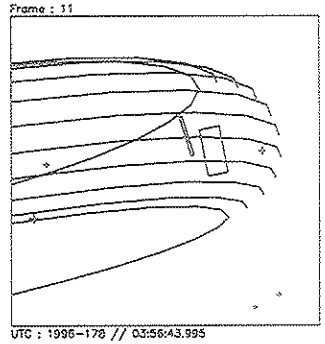

UTC : 1996-178 // 03:56:43.995
SCLK: 1/03496034:77:5:5

Frame : 12

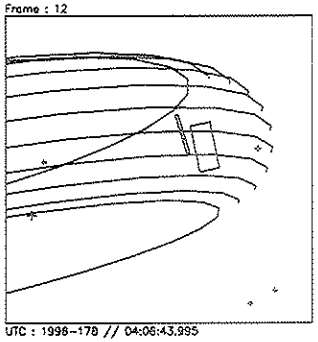

UTC : 1996-178 // 04:06:43.995
SCLK: 1/03496044:67:5:5

Frame : 13

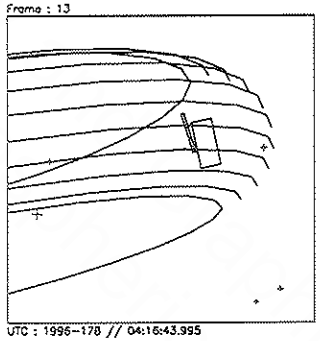

UTC : 1996-178 // 04:16:43.995
SCLK: 1/03496054:57:5:5

Start UTC_TIME : 1996-178 // 02:06:44.000
No End Time :
Start SCLK : 1/03495926:05:5:5

Target Body : JUPITER
Target Cone/Clock : 128.52/ 92.96 Deg
S/C to Body Center : 1840564. Km (25.745035 Rj)
Z-axis Pointing (Ra / Dec) : 102.80 / 25.00 Deg

ACTIVITY ID: G1TUG1NPRO42-

START TIME: 96-178/04:21:12.933

Activity ID: Orbit G1 **OAPEL** TUG1NPRO **SeqNo** 42-

Title UVS NOON ANSA PROFILE 4-2 **Instrument** UVS

Requestor UVS-MWG/S.STEPHENS 37737 **Team** UVS **Working Group** MWG

Time System CDS **Load ID** G1A **Calendar Date** 06/26/96 **Week** 26

Start	JEE-CDS 00002621:00:0	96-178/04:21:12.933	JEE-001/20:10:07.333
End	JEE-CDS 00002464:00:0	96-178/06:59:57.600	JEE-001/17:31:22.666
Duration	00000157:00:0	000/02:38:44.667	000/02:38:44.667

Top Label G1TUG1NPRO42-

Bottom Label (UVS RTS Torus)

Plot Key	UVS	**Type**	SCI		
CDS Bytes	172	**Report Options**	BOTH	**Scan Platform**	Yes
CDS Source	PA	**Spin State**	DUAL	**DMS**	No

Observation Objective

UVS IO TORUS NOON ANSA RADIAL PROFILE 4 (PART 2) (NO EUV):
  From: 5.43 Rj at cone > 90 (ribbon at 5.63 Rj, Sys III W Long 290)
  To: 6.19 Rj (outside ribbon) at fixed cone
  Data rate: Instrument states usually last 60 RIMS; thus, 4.87 bps UVS
OPTRTM/UVFLUSH STRATEGY (17,712 bits per UVS or EUV PACKET):
  UVS deselected; thus, 60-RIM UVFLUSHes needed to PACKET UVS, after initial DISCRD
WAVELENGTHS (Angstroms):
  Emission lines: UVS (S+ 1259, O+ 2471)
  2POSN-22STEP F/G MINISCAN (UVS): F 2436.8-2501.0 (CTR 2470.4, STEP 275) [EVEN FRAMES],
                G 1239.8-1272.1 (CTR 1256.7, STEP 81) [ODD FRAMES]
  2POSN-1STEP G/G MINISCAN (UVS): G 1258.2 (STEP 82) [EVEN FRAMES],
                G 1341.0 (STEP 136) [ODD FRAMES]
  Strategy for MINISCANS: Alternate 22STEP and 1STEP for PWS quiet

Design Detail

Last modified 05/04/96

```
PSID    RIM:mf  CDS PA
-----------------------------------------------------------------------------
384BM   0       0   COMMENT [UVS RIM 0]
157BO   3       52  CMDRS (10+14*3) [PLAN DUR 154, EST UVS CMDS 3]
349NR   3:69    28  UVFLUSH [6UVRT, DISCRD, UVS]
165BK   4       36  TARGET [CONE 116.92, CLOCK 92.29]
        4           34UVS,D3,F,N,N,N,S,0,ON,OFF,ON,ON,OFF,NO,1,08,4D,00,6A [22STEP F/G]
349NT   62:69   28  UVFLUSH [6UVRT, PACKET, UVS]
        64          34UVS,C1,F,N,N,N,S,0,OFF,OFF,ON,ON,OFF,NO,1,7E,05,00,36 [1STEP G/G]
349NV   155:69  28  UVFLUSH [6UVRT, PACKET, UVS]
        157         34UVS,C1,F,N,N,N,S,0,OFF,OFF,ON,OFF,OFF,NO,1,2C,05,00,00 [HVOFF]
```

Frame : 0

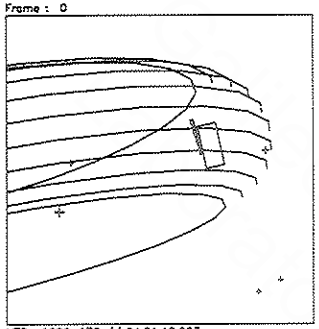

UTC : 1996-178 // 04:21:12.003
SCLK: 1/03496059:04:5:6

Frame : 1

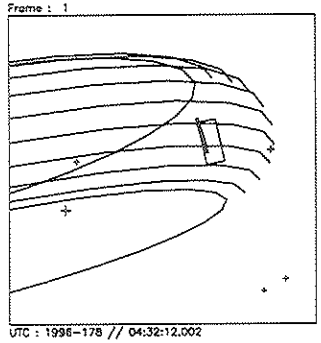

UTC : 1996-178 // 04:32:12.002
SCLK: 1/03496069:84:5:6

Frame : 2

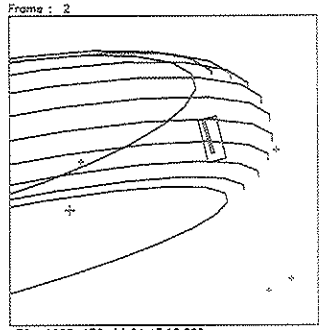

UTC : 1996-178 // 04:43:12.002
SCLK: 1/03496080:73:5:6

Frame : 3

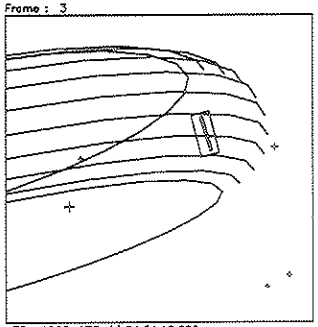

UTC : 1996-178 // 04:54:12.002
SCLK: 1/03496091:62:5:6

Frame : 4

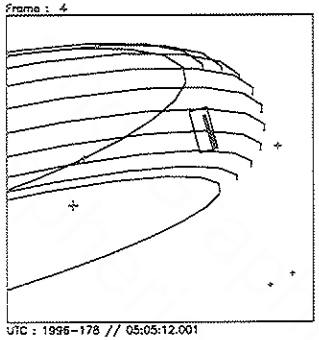

UTC : 1996-178 // 05:05:12.001
SCLK: 1/03496102:51:5:6

Frame : 5

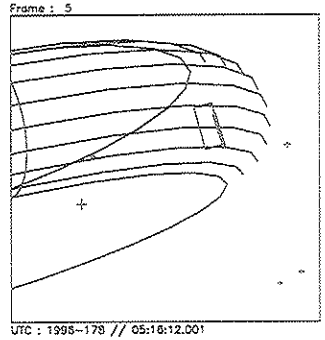

UTC : 1996-178 // 05:16:12.001
SCLK: 1/03496113:40:5:6

Frame : 6

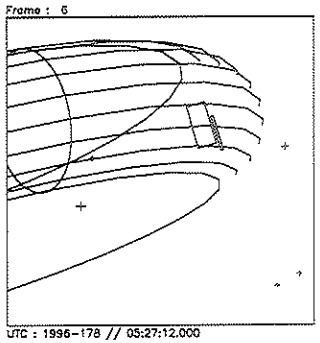

UTC : 1996-178 // 05:27:12.000
SCLK: 1/03496124:29:5:6

Frame : 7

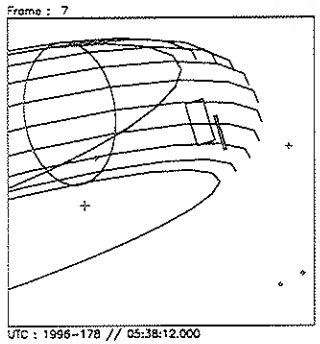

UTC : 1996-178 // 05:38:12.000
SCLK: 1/03496135:18:5:6

Frame : 8

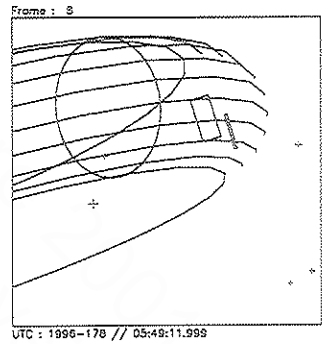

UTC : 1996-178 // 05:49:11.999
SCLK: 1/03496146:07:5:6

Start UTC_TIME : 1996-178 // 04:21:12.000
No End Time :
Start SCLK : 1/03496059:04:5:6

Target Body : JUPITER
Target Cone/Clock : 129.17/ 92.94 Deg
S/C to Body Center : 1818982. Km (25.443155 Rj)
Z-axis Pointing (Ra / Dec) : 102.80 / 25.00 Deg

Frame : 9

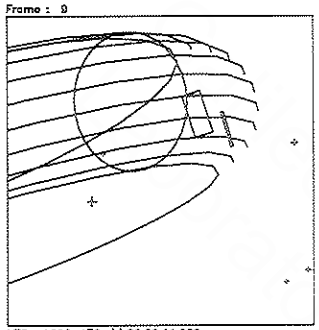

UTC : 1996-178 // 06:00:11.999
SCLK: 1/03496156:67:5:6

Frame : 10

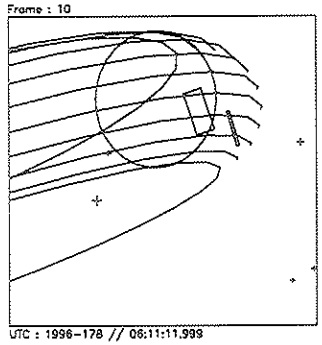

UTC : 1996-178 // 06:11:11.999
SCLK: 1/03496167:76:5:6

Frame : 11

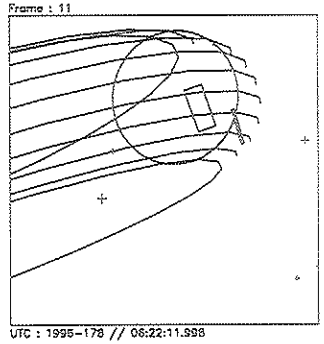

UTC : 1996-178 // 06:22:11.998
SCLK: 1/03496178:65:5:6

Frame : 12

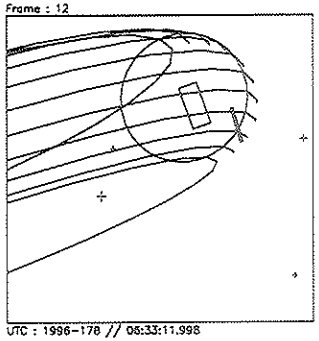

UTC : 1996-178 // 06:33:11.998
SCLK: 1/03496189:54:5:6

Frame : 13

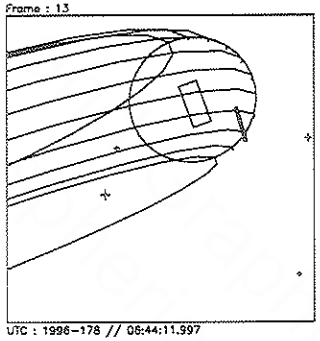

UTC : 1996-178 // 06:44:11.997
SCLK: 1/03496200:43:5:6

Frame : 14

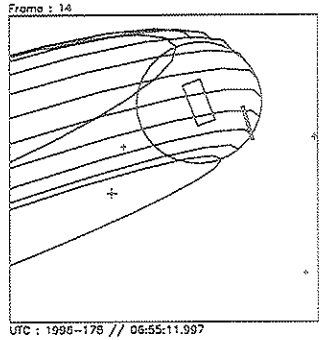

UTC : 1996-178 // 06:55:11.997
SCLK: 1/03496211:32:5:6

Start UTC_TIME : 1996-178 // 04:21:12.000
No End Time :
Start SCLK : 1/03496059:04:5:6

Target Body : JUPITER
Target Cone/Clock : 130.68/ 92.89 Deg
S/C to Body Center : 1770817. Km (24.769438 Rj)
Z-axis Pointing (Ra / Dec) : 102.80 / 25.00 Deg

Activity ID: Orbit G1 **OAPEL** TUG1NPRO **SeqNo** 62-

Title UVS NOON ANSA PROFILE 6-2 **Instrument** UVS

Requestor UVS-MWG/S.STEPHENS 37737 **Team** UVS **Working Group** MWG

Time System CDS **Load ID** G1A **Calendar Date** 06/26/96 **Week** 26

Start	JEE-CDS 00001854:00:0	96-178/17:16:44.266	JEE-001/07:14:36.000
End	JEE-CDS 00001609:00:0	96-178/21:24:27.600	JEE-001/03:06:52.666
Duration	00000245:00:0	000/04:07:43.334	000/04:07:43.334

Top Label G1TUG1NPRO62-

Bottom Label (UVS RTS Torus)

Plot Key UVS **Type** SCI

CDS Bytes 298 **Report Options** BOTH **Scan Platform** Yes

CDS Source PA **Spin State** DUAL **DMS** No

Observation Objective

UVS IO TORUS NOON ANSA RADIAL PROFILE 6 (USED TO BE PART 2 OF 2) (NO EUV):
From: 4.92 Rj (inside ribbon) at cone > 90 (ribbon at 5.69 Rj, Sys III W Long 84)
To: 6.44 Rj (outside ribbon) at fixed cone
Data rate: Instrument states usually last 60 RIMS; thus, 4.87 bps UVS (higher over ribbon)
OPTRTM/UVFLUSH STRATEGY (17,712 bits per UVS or EUV PACKET):
UVS deselected; thus, 60-RIM UVFLUSHes needed to PACKET UVS, after initial DISCRD
WAVELENGTHS (Angstroms):
Emission lines: UVS (S+ 1259, O+ 2471)
2POSN-22STEP F/G MINISCAN (UVS): F 2436.8-2501.0 (CTR 2470.4, STEP 275) [EVEN FRAMES],
G 1239.8-1272.1 (CTR 1256.7, STEP 81) [ODD FRAMES]
2POSN-1STEP G/G MINISCAN (UVS): G 1258.2 (STEP 82) [EVEN FRAMES],
G 1341.0 (STEP 136) [ODD FRAMES]
Strategy for MINISCANS: Alternate 22STEP and 1STEP for PWS quiet

Design Detail

Last modified 05/04/96

```
PSID     RIM:mf  CDS PA
-----------------------------------------------------------------------------------------
384BP    0       0   COMMENT [UVS RIM 0]
157BS    3       94  CMDRS (10+14*6) [PLAN DUR 242, EST UVS CMDS 6]
349OC    3:69    28  UVFLUSH [6UVRT, DISCRD, UVS]
165BN    4       36  TARGET [CONE 129.61, CLOCK 92.19]
         4           34UVS,D3,F,N,N,N,S,0,ON,OFF,ON,ON,OFF,NO,1,08,4D,00,6A [22STEP F/G]
349OE    62:69   28  UVFLUSH [6UVRT, PACKET, UVS]
         64          34UVS,C1,F,N,N,N,S,0,OFF,OFF,ON,ON,OFF,NO,1,7E,05,00,36 [1STEP G/G]
349OH    102:69  28  UVFLUSH [6UVRT, PACKET, UVS]
         104         34UVS,D3,F,N,N,N,S,0,ON,OFF,ON,ON,OFF,NO,1,08,4D,00,6A [22STEP F/G]
349OI    142:69  28  UVFLUSH [6UVRT, PACKET, UVS]
         144         34UVS,C1,F,N,N,N,S,0,OFF,OFF,ON,ON,OFF,NO,1,7E,05,00,36 [1STEP G/G]
349OJ    182:69  28  UVFLUSH [6UVRT, PACKET, UVS]
         184         34UVS,D3,F,N,N,N,S,0,ON,OFF,ON,ON,OFF,NO,1,08,4D,00,6A [22STEP F/G]
349OL    243:69  28  UVFLUSH [6UVRT, PACKET, UVS]
         245         34UVS,C1,F,N,N,N,S,0,OFF,OFF,ON,OFF,OFF,NO,1,2C,05,00,00 [HVOFF]
```

Frame : 0

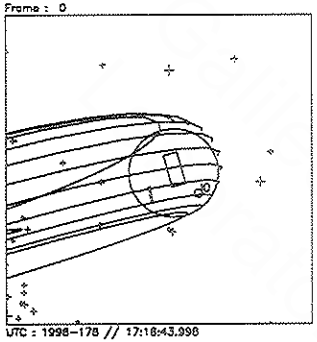

UTC : 1996-178 // 17:16:43.996
SCLK: 1/03496826:05:6:1

Frame : 1

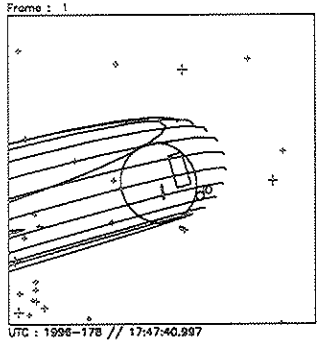

UTC : 1996-178 // 17:47:40.997
SCLK: 1/03496858:61:1:1

Frame : 2

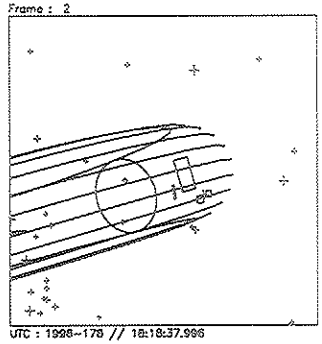

UTC : 1996-178 // 18:18:37.996
SCLK: 1/03496887:25:6:1

Frame : 3

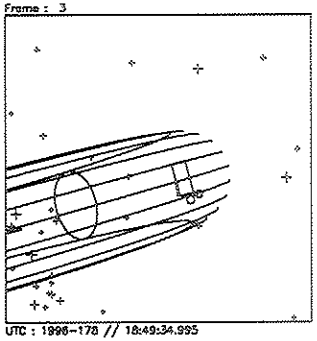

UTC : 1996-178 // 18:49:34.995
SCLK: 1/03496917:81:1:1

Frame : 4

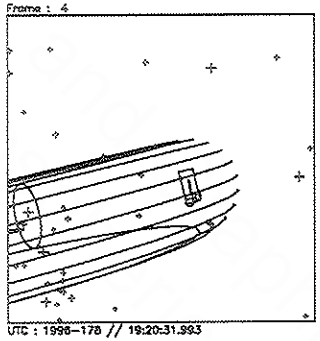

UTC : 1996-178 // 19:20:31.993
SCLK: 1/03496948:45:6:1

Frame : 5

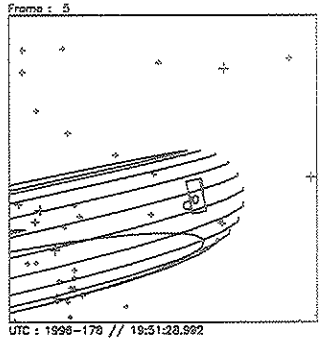

UTC : 1996-178 // 19:51:28.992
SCLK: 1/03496979:10:1:1

Frame : 6

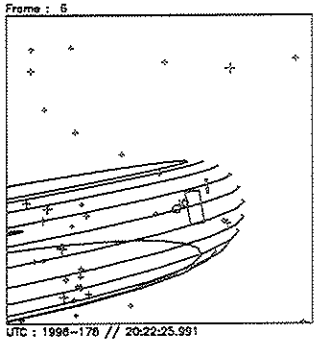

UTC : 1996-178 // 20:22:25.991
SCLK: 1/03497009:85:6:1

Frame : 7

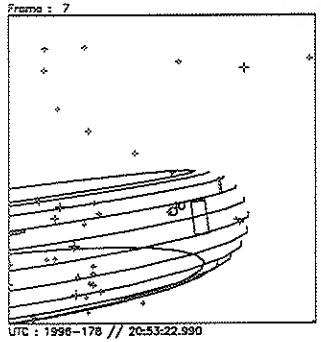

UTC : 1996-178 // 20:53:22.990
SCLK: 1/03497040:30:1:1

Frame : 8

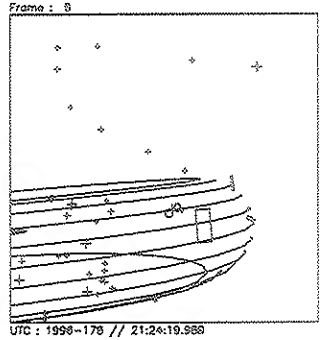

UTC : 1996-178 // 21:24:19.989
SCLK: 1/03497070:85:6:1

Start UTC_TIME : 1996-178 // 17:16:44.000
No End Time :
Start SCLK : 1/03496826:05:6:1

Target Body : JUPITER
Target Cone/Clock : 143.66/ 92.39 Deg
S/C to Body Center : 1440002. Km (20.142146 Rj)
Z-axis Pointing (Ra / Dec) : 102.80 / 25.00 Deg

Activity ID: Orbit G1 **OAPEL** IUIECLPS **SeqNo** 01-

Title UVS IO ECLIPSE (PRE-INGRESS) **Instrument** UVS

Requestor UVS-SWG/K.NAVIAUX 37740 **Team** UVS **Working Group** SWG

Time System CDS **Load ID** G1A **Calendar Date** 06/23/96 **Week** 25

Start	JEE-CDS 00006030:00:0	96-175/18:54:20.266	JEE-004/05:37:00.000
End	JEE-CDS 00005991:00:0	96-175/19:33:46.266	JEE-004/04:57:34.000
Duration	00000039:00:0	000/00:39:26.000	000/00:39:26.000

Top Label G1IUIECLPS01-

Bottom Label (real-time)

Plot Key	UVS	**Type**	SCI		
CDS Bytes	130	**Report Options**	BOTH	**Scan Platform**	Yes
CDS Source	OAP	**Spin State**	DUAL	**DMS**	No

Observation Objective

UVS real-time Io Eclipse observation. Characterize the change in the lower atmospheric UV airglow emissions as Io enters and exits eclipse. Determine if the source of the change is due to: 1) a change in the lower atmospheric composition as it cools (ie. SO2 condensation); or 2) a potential change in the excitation mechanism if solar photoexcitation is dominant over particle impact.

G1IUIECLPS01- = Io eclipse pre-ingress measurment. Scan-platform drifts across Io in real-time (34 RIM 3-sigma drift rate) using the UVS 10bps RTS rate. Only 1 drift will be done prior to eclipse ingress due to PWS time sharing..

UVS Configuration = F/G Full Scans

Design Detail

```
CDS RIM Command Parameters                                  PSID
--- --- ------- ----------                                  ----
28   003+UVFLUSH DISCRD,UVS                                 (CA)
36   004 TARGET  (4 RIM Posn_Slew)                          (CA)
38   003 CMDRS                                              (CA)
     004      1    34UVS,07,S,N,N,N,S,0, ON,OFF,   ON, ON,OFF,NOOVR,1,00,9C,01,2C
     038      35   34UVS,C1,F,N,N,N,S,0,OFF,OFF,   ON,OFF,OFF,NOOVR,1,2C,05,00,00
28   037+UVFLUSH PACKET,UVS
```

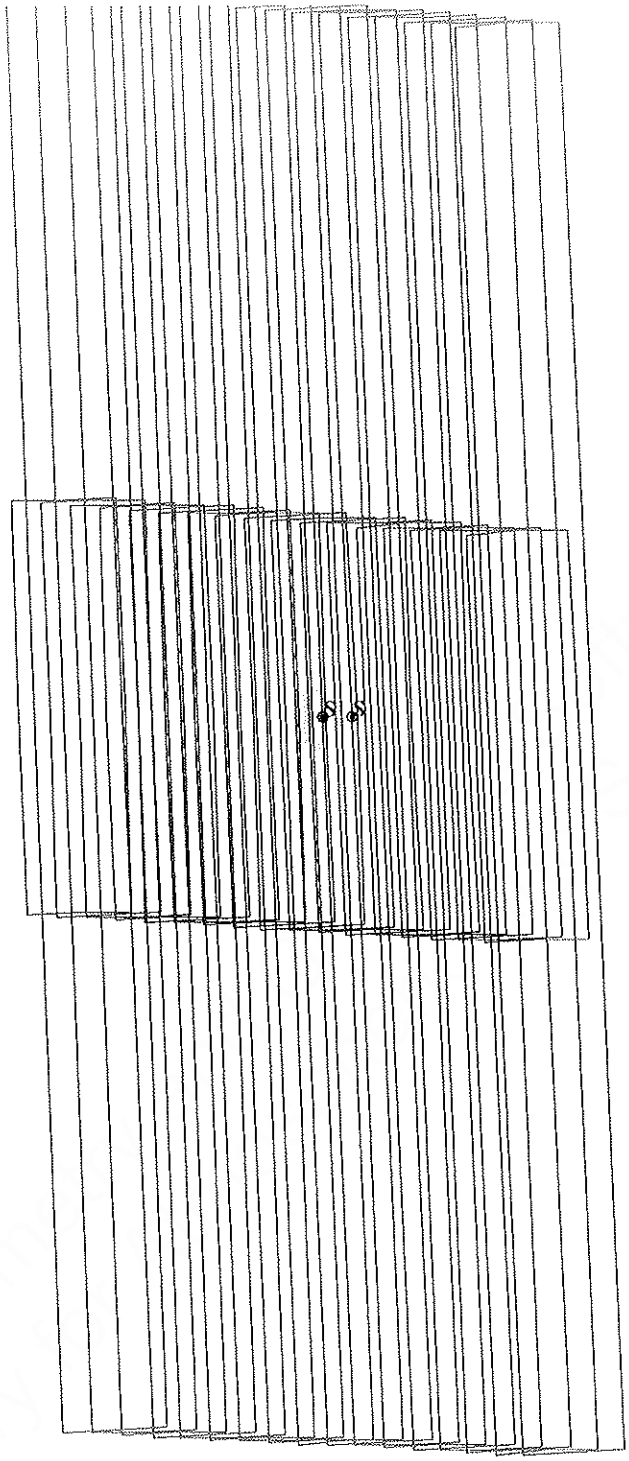

165CA:TT= 0 TMC= 1 C= 4.19 XC= 0.33 BS= 0/2100 TC= 9
A= 728 pD= 0 SR=17.430 RA50=209.10 DEC50= -8.48 cone=108.29 clock= 93.41

ARGET G1.0 brad : 2/28/1996 12:55: 7

ILE:P.G1IUIECLPS01

ARGET BODY : IO

INI:m.target.enc

` EPH:/DATA/NAVIO/T-960110-ALL.NS

ERIAPSIS: THINNING:NONE :UVS 1

TART:JEE 96-180/00:31:20.266 -CDS 6026:00:0 BODY PLOT TIME:TARGET-TIME D= 0 S= 0.040

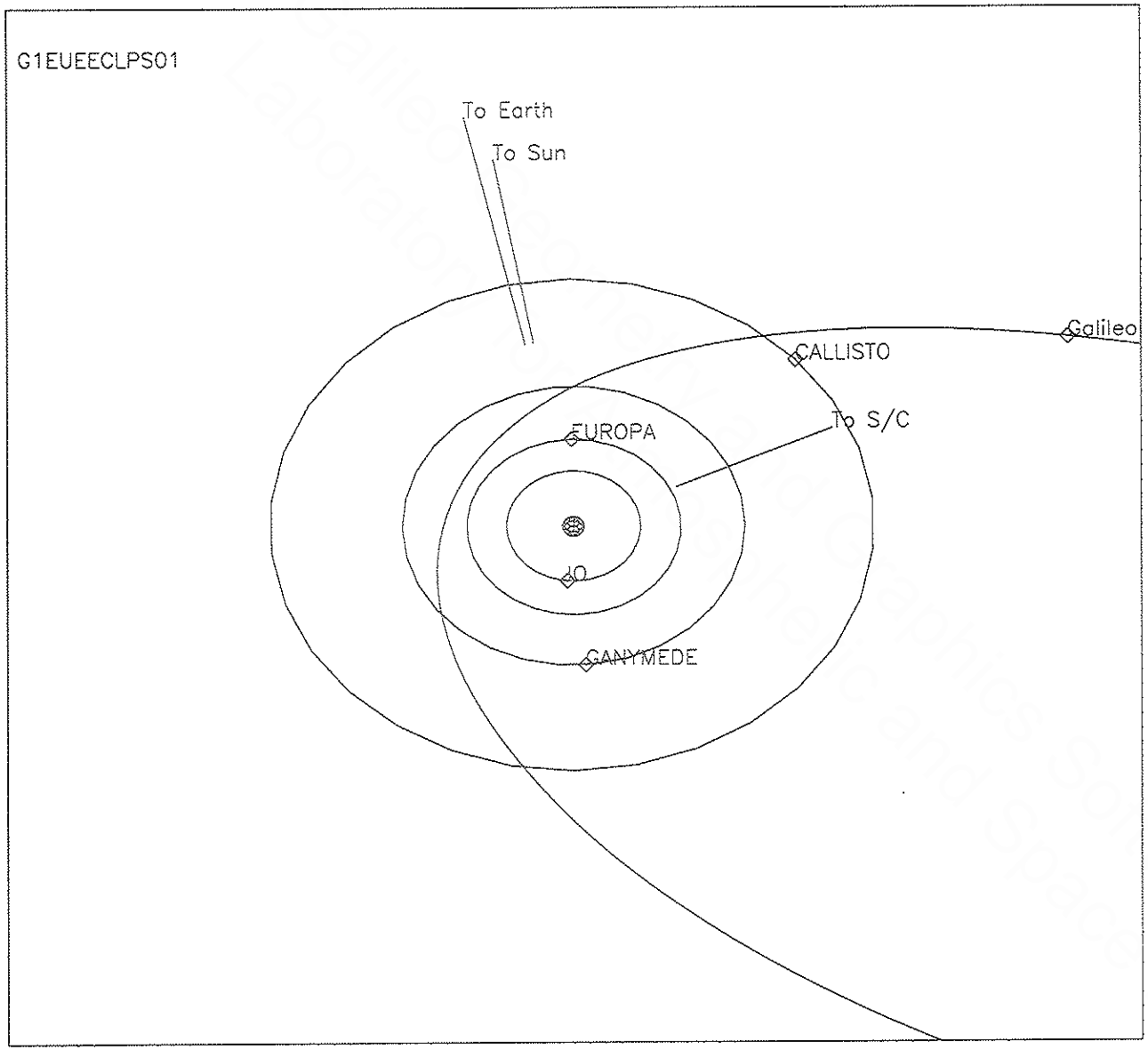

1996-175 // 18:54:20.000

28 days, 0.0 hours trajectory

Frame : 0

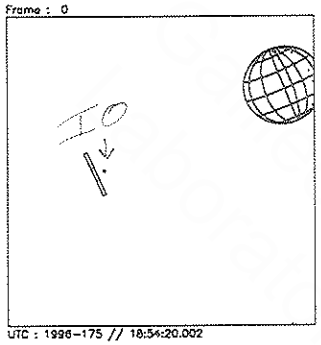

UTC : 1996-175 // 18:54:20.002
SCLK: 1/03492650:05:3:6

Frame : 1

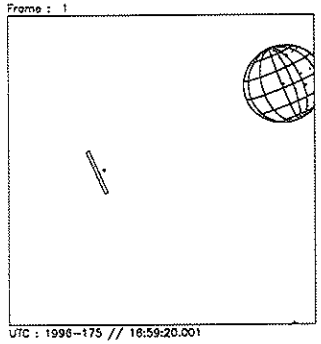

UTC : 1996-175 // 18:59:20.001
SCLK: 1/03492655:00:3:6

Frame : 2

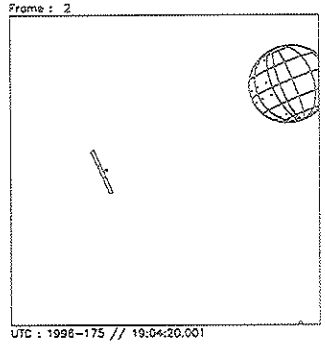

UTC : 1996-175 // 19:04:20.001
SCLK: 1/03492659:96:3:6

Frame : 3

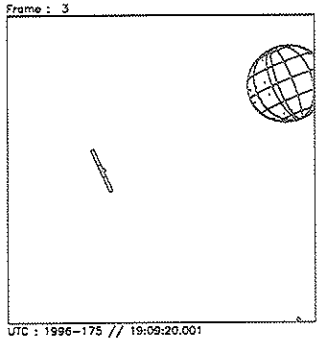

UTC : 1996-175 // 19:09:20.001
SCLK: 1/03492664:81:3:6

Frame : 4

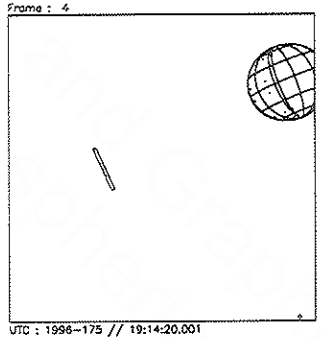

UTC : 1996-175 // 19:14:20.001
SCLK: 1/03492669:76:3:6

Frame : 5

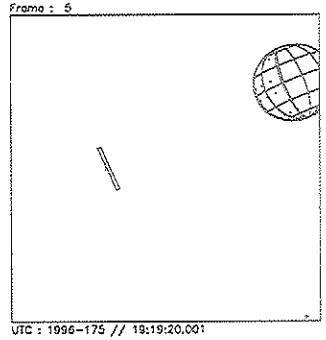

UTC : 1996-175 // 19:19:20.001
SCLK: 1/03492674:71:3:6

Frame : 6

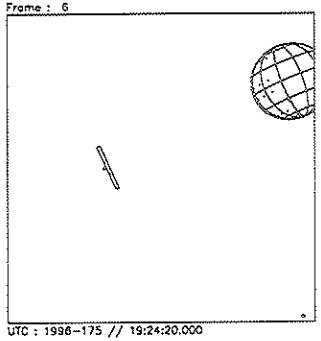

UTC : 1996-175 // 19:24:20.000
SCLK: 1/03492679:66:3:6

Frame : 7

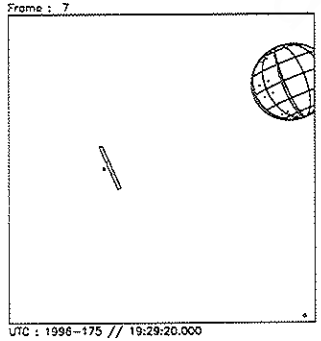

UTC : 1996-175 // 19:29:20.000
SCLK: 1/03492684:61:3:6

Frame : 8

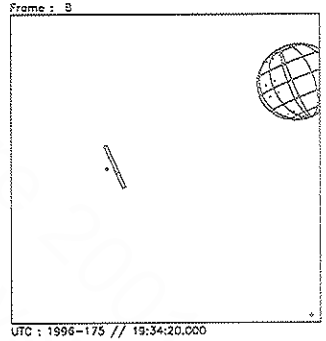

UTC : 1996-175 // 19:34:20.000
SCLK: 1/03492689:56:3:6

Start UTC_TIME : 1996-175 // 18:54:20.000
No End Time :
Start SCLK : 1/03492650:05:3:6

Target Body : IO
Target Cone/Clock : 108.00/ 93.39 Deg
S/C to Body Center : 3564884. Km (1954.0573 Ri)
Z-axis Pointing (Ra / Dec) : 102.80 / 25.00 Deg

Frame : 0

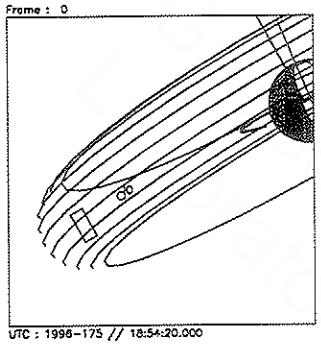

UTC : 1996-175 // 18:54:20.000
SCLK: 1/03492650:05:3:6

Frame : 1

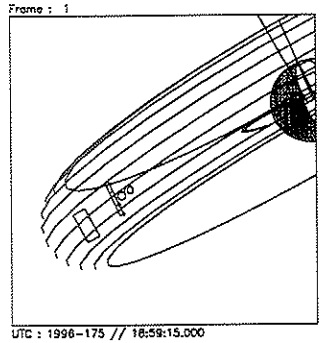

UTC : 1996-175 // 18:59:15.000
SCLK: 1/03492654:83:8:6

Frame : 2

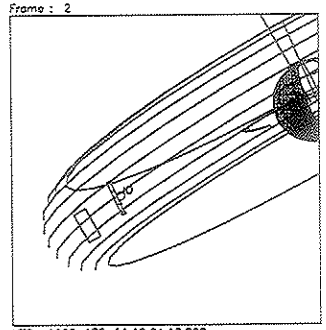

UTC : 1996-175 // 19:04:10.000
SCLK: 1/03492659:71:3:6

Frame : 3

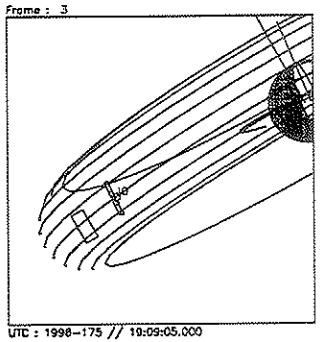

UTC : 1996-175 // 19:09:05.000
SCLK: 1/03492664:58:8:6

Frame : 4

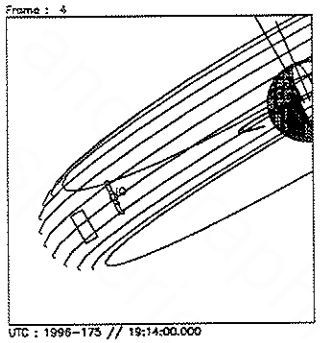

UTC : 1996-175 // 19:14:00.000
SCLK: 1/03492669:46:3:6

Frame : 5

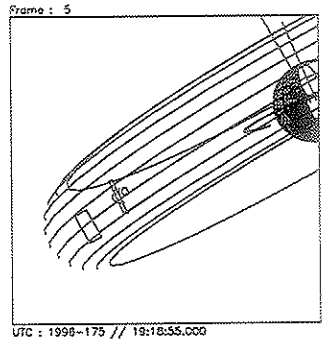

UTC : 1996-175 // 19:18:55.000
SCLK: 1/03492674:33:8:6

Frame : 6

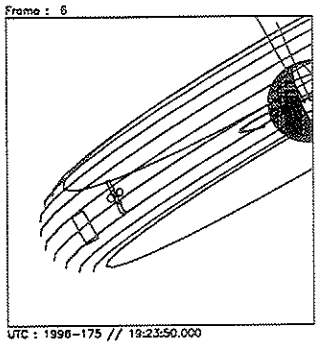

UTC : 1996-175 // 19:23:50.000
SCLK: 1/03492679:21:3:6

Frame : 7

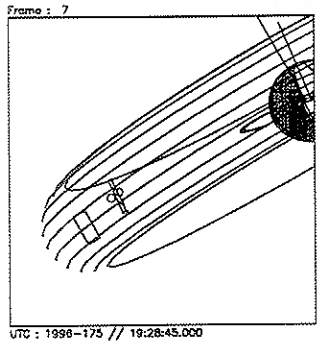

UTC : 1996-175 // 19:28:45.000
SCLK: 1/03492684:08:8:6

Frame : 8

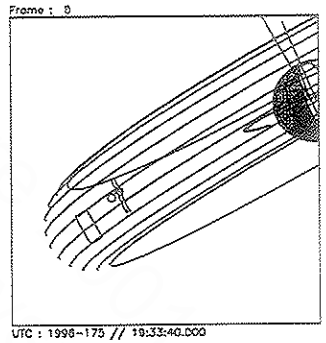

UTC : 1996-175 // 19:33:40.000
SCLK: 1/03492688:87:3:6

Start UTC_TIME : 1996-175 // 18:54:20.000
End UTC_TIME : 1996-175 // 19:33:46.000
Start SCLK : 1/03492650:05:3:6
Delta Time between FOV : 295.0000
FOVs : F Channel(0.1x0.4), N/G Channel(0.1x1.0)

Target Body : JUPITER
Target Cone/Clock : 102.01/ 93.54 Deg
S/C to Body Center : 3349781. Km (46.855325 Rj)
Z-axis Pointing (Ra / Dec) : 102.80 / 25.00 Deg

Activity ID: Orbit G1 **OAPEL** IUIECLPS **SeqNo** 02-

Title UVS IO ECLIPSE (POST-INGRESS) **Instrument** UVS

Requestor UVS-SWG/K.NAVIAUX 37740 **Team** UVS **Working Group** SWG

Time System CDS **Load ID** G1A **Calendar Date** 06/23/96 **Week** 25

Start	JEE-CDS 00005990:00:0	96-175/19:34:46.933	JEE-004/04:56:33.333
End	JEE-CDS 00005951:00:0	96-175/20:14:12.933	JEE-004/04:17:07.333
Duration	00000039:00:0	000/00:39:26.000	000/00:39:26.000

Top Label G1IUIECLPS02-

Bottom Label (real-time)

Plot Key	UVS	**Type**	SCI		
CDS Bytes	130	**Report Options**	BOTH	**Scan Platform**	Yes
CDS Source	OAP	**Spin State**	DUAL	**DMS**	No

Observation Objective

UVS real-time Io Eclipse observation. Characterize the change in the lower atmospheric UV airglow emissions as Io enters and exits eclipse. Determine if the source of the change is due to: 1) a change in the lower atmospheric composition as it cools (ie. SO2 condensation); or 2) a potential change in the excitation mechanism if solar photoexcitation is dominant over particle impact.

G1IUIECLPS02- = Io eclipse post-ingress measurment. 1 scan-platform drift across Io in real-time (34 RIM 3-sigma drift rate) using the UVS 10bps RTS rate. Only 1 drift will be done after eclipse ingress due to PWS time sharing.

UVS Configuration = F/G Full Scans

Design Detail

```
CDS RIM Command Parameters                                  PSID
--- --- -------- ----------                                 ----
28  003+UVFLUSH DISCRD,UVS                                  (CC)
36  004 TARGET  (4 RIM Posn_Slew)                           (CB)
38  003 CMDRS                                               (CB)
    004      1   34UVS,07,S,N,N,N,S,0,  ON,OFF,  ON,  ON,OFF,NOOVR,1,00,9C,01,2C
    038     35   34UVS,C1,F,N,N,N,S,0,OFF,OFF,  ON,OFF,OFF,NOOVR,1,2C,05,00,00
28  037+UVFLUSH PACKET,UVS                                  (CD)
```

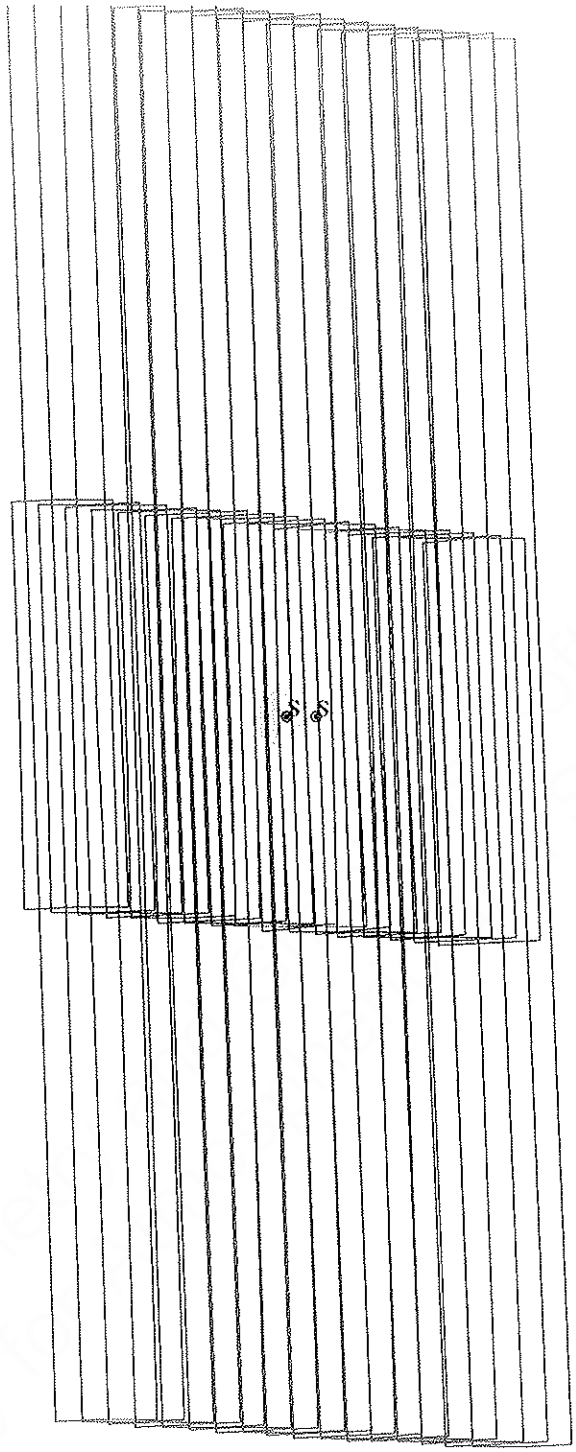

165CB:TT= 0 TMC= 1 C= 3.67 XC= 0.33 BS= 0/9380 TC= 9
A= 728 pD= 0 SR=17.430 RA50=209.60 DEC50= -8.63 cone=108.81 clock= 93.47

ARGET G1.0 brad : 2/28/1996 12:55: 7

ILE:P.G1IUIECLPS02

ARGET BODY : IO

INI:m.target.enc

: EPH:/DATA/NAVIO/T-960110-ALL.NS

ERIAPSIS: THINNING:NONE :UVS 1

TART:JEE 96-180/00:31:20.266 -CDS 5986:00:0 BODY PLOT TIME:TARGET-TIME D= 0 S= 0.040

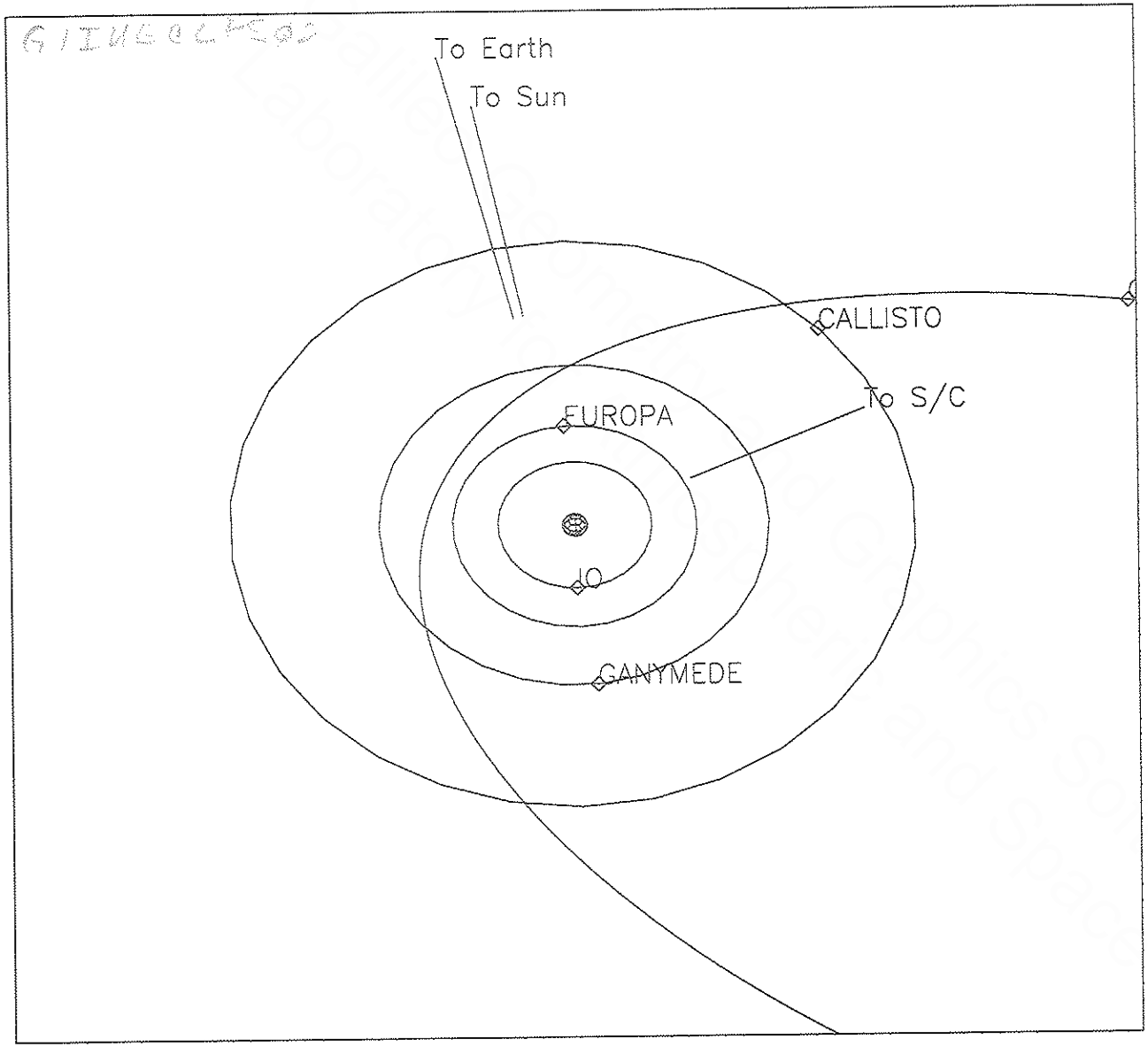

1996–175 // 19:34:46.000 28 days, 0.0 hours trajectory

Frame : 0

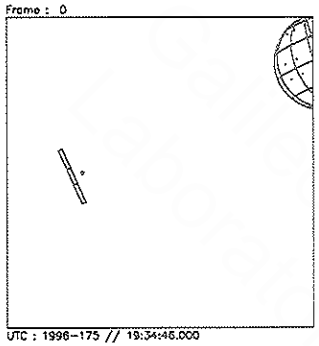

UTC : 1996-175 // 19:34:46.000
SCLK: 1/03492690:04:3:6

Frame : 1

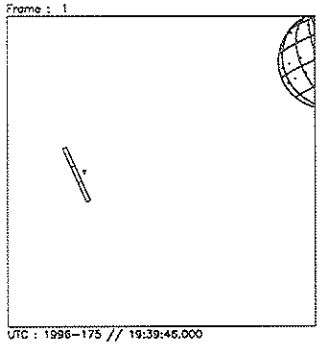

UTC : 1996-175 // 19:39:46.000
SCLK: 1/03492694:90:3:6

Frame : 2

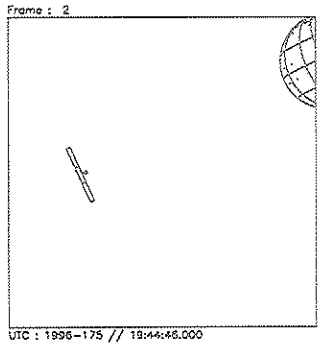

UTC : 1996-175 // 19:44:46.000
SCLK: 1/03492699:85:3:6

Frame : 3

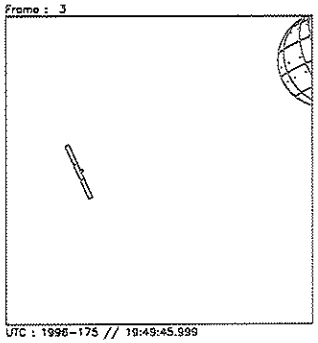

UTC : 1996-175 // 19:49:45.999
SCLK: 1/03492704:80:3:6

Frame : 4

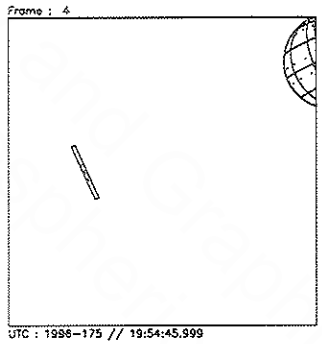

UTC : 1996-175 // 19:54:45.999
SCLK: 1/03492709:75:3:6

Frame : 5

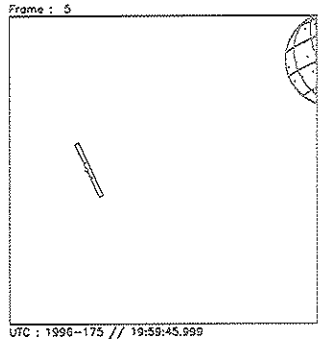

UTC : 1996-175 // 19:59:45.999
SCLK: 1/03492714:70:3:6

Frame : 6

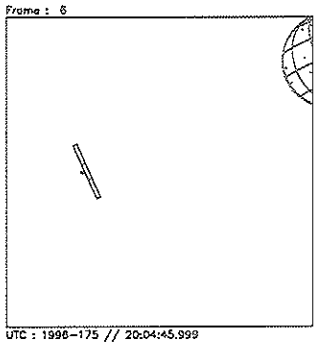

UTC : 1996-175 // 20:04:45.999
SCLK: 1/03492719:65:3:6

Frame : 7

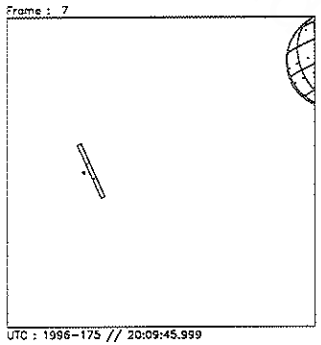

UTC : 1996-175 // 20:09:45.999
SCLK: 1/03492724:60:3:6

Frame : 8

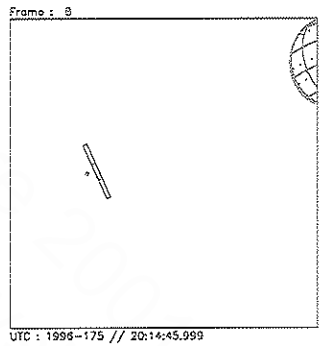

UTC : 1996-175 // 20:14:45.999
SCLK: 1/03492729:55:3:6

Start UTC_TIME : 1996-175 // 19:34:46.000
No End Time :
Start SCLK : 1/03492690:04:3:6

Target Body : IO
Target Cone/Clock : 108.54/ 93.45 Deg
S/C to Body Center : 3513826. Km (1926.0700 Ri)
Z-axis Pointing (Ra / Dec) : 102.80 / 25.00 Deg

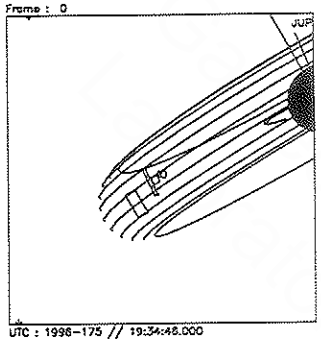

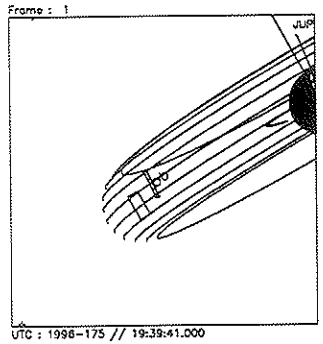

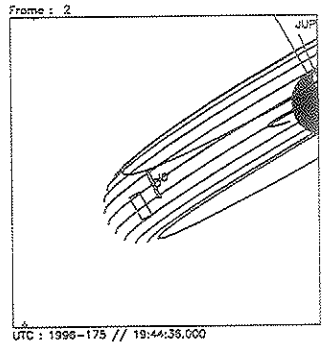

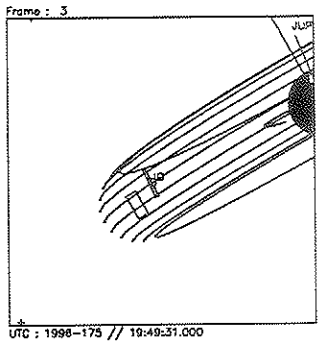

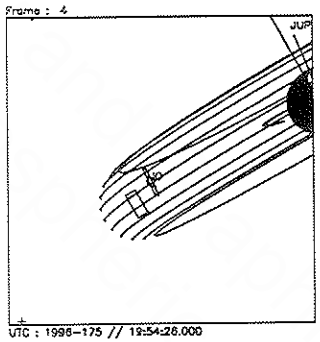

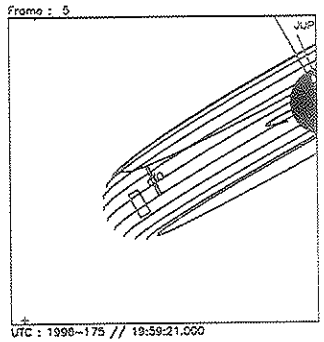

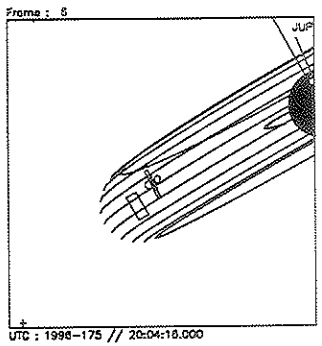

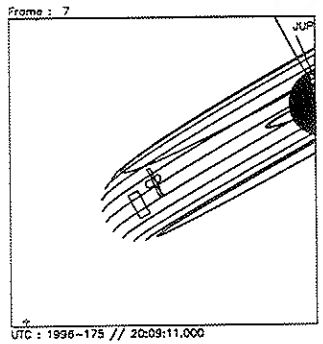

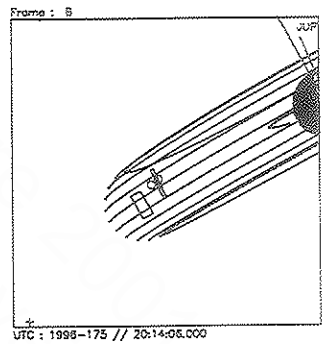

Start UTC_TIME : 1996-175 // 19:34:46.000
End UTC_TIME : 1996-175 // 20:14:12.000
Start SCLK : 1/03492690:04:3:6
Delta Time between FOV : 295.0000
FOVs : F Channel(0.1x0.4), N/G Channel(0.1x1.0)

Target Body : JUPITER
Target Cone/Clock : 102.19/ 93.54 Deg
S/C to Body Center : 3333479. Km (46.627296 Rj)
Z-axis Pointing (Ra / Dec) : 102.80 / 25.00 Deg