GALILEO ORBIT ACTIVITY PLAN (OAP)
04/18/1990 09:09

ACTIVITY ID: E1HUANTIA-01
START TIME: 90-312/22:00:00

Activity ID:	ORBIT E1 TARGET H OAPEL UANTIA MULTI - SEQ NO 01
Title	UVS ANTISUN MAP-ALLSPIN
Requestor	JAJELLO
Working Group	MWG Bottom Label ANTISUN Plot Key UVS1

UTC TIMING BLOCK

	(YY-DDD/HH:MM:SS)
Start Time	90-312/22:00:00
End Time	90-313/00:59:00
Duration	000/02:59:00

AACS/DMS/DOWNLINK

Instruments Used:	DDS	N	EPD	N	HIC	N	MAG	N	NIMS	N	PLS	N	
	PPR	N	PWS	N	RS	N	SSI	N	UVS	Y	EUV	N	
Scan Platform Reserved		Y	Earth Referenced					N					
Spin Status (All/Dual)		A	Coop Imaging Required					N	DMS Activity				NONE
Data Format/RT Downlink		7.68											

OBSERVATION OBJECTIVE

TO MEASURE INTERPLANETARY LYMAN ALPHA GRID POINTS WITH 10 DEGREE RESOLUTION OVER ENTIRE ANTI SUN HEMISPHERE. THE UVS WILL BE COMMANDED TO LYMAN-ALPHA MINISCAN MODE FOR ALL TEN DIFFERENT CONE ANGLES . OBJECTIVES ARE TO : 1) MEASURE 27 DAY SOLAR LYMAN ALPHA VARIATION,2) CROSS CALIBRATE WITH EUV AND 3) MAP ANTI SUN H LYMAN -ALPHA FROM INTERSTELLAR WIND. FOR S/N =33 (3% STATISTICS) THE ANGULAR RESOLUTION IN THE SKY IS 10 DEGREES IN CLOCK AND CONE.

DESIGN DETAIL

CDS Byte Count Estimate 344

TIME (RIMS)	PA	DESCRIPTION
0	PCINIT	PUT SPACECRAFT IN ALLSPIN MODE-UVS SAFE
8	ALSPINSP	CONE =170,CLOCK=135
24		CONE=160,CLOCK=135
40		CONE=150,CLOCK=135
56		CONE=140,CLOCK=135
72		CONE=130,CLOCK=135
88		CONE=120,CLOCK=135
104		CONE=110,CLOCK=135
120		CONE=100,CLOCK=135
136		CONE=90,CLOCK=135
152		CONE=80,CLOCK=180
169	PCREST	RETURN TO DUAL SPIN MODE
4	CMDRS	UVS TO LYMAN-ALPHA MINISCAN

CDS WORD COUNT:
PCINIT 74
CMDRS 1 x 14= 14
ALLSPINSP= 22*11=242

TOTAL= 344 BYTES

CHANGE CONTROL

Version	13	Page	01 of 05
Submission date	03/06/1990	Change Date	04/18/1990
Figure attached (Y/N)	Y	Changed by	JAJELLO

UVS 903121600_NEW
Nov 14, 90
ANTIA #1

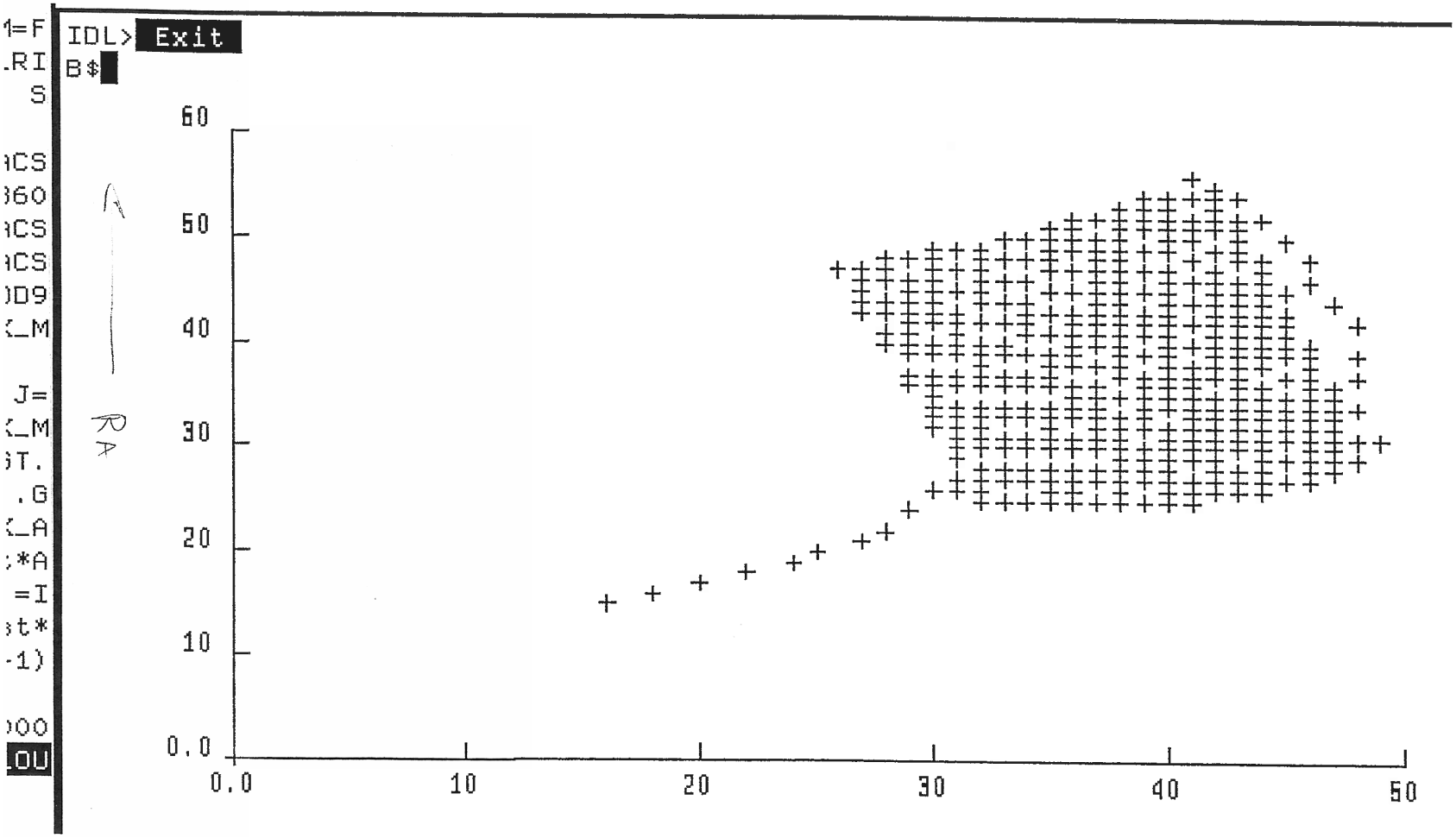

GALILEO ORBIT ACTIVITY PLAN (OAP)
04/18/1990 08:36

ACTIVITY ID: E1HUCROSS-01
START TIME: 90-313/01:00:00

Activity ID:	ORBIT E1 TARGET H OAPEL UCROSS MULTI - SEQ NO 01
Title	UVS/EUV CROSS CALIBRATION
Requestor	JAJELLO
Working Group	MWG Bottom Label CROSSCAL Plot Key UVS1

UTC TIMING BLOCK

	(YY-DDD/HH:MM:SS)
Start Time	90-313/01:00:00
End Time	90-313/16:59:00
Duration	000/15:59:00

AACS/DMS/DOWNLINK

Instruments Used:	DDS	N	EPD	N	HIC	N	MAG	N	NIMS	N	PLS	N
	PPR	N	PWS	N	RS	N	SSI	N	UVS	Y	EUV	Y

Scan Platform Reserved Y Earth Referenced N
Spin Status (All/Dual) A Coop Imaging Required N DMS Activity NONE
Data Format/RT Downlink 7.68

OBSERVATION OBJECTIVE

UVS/EUV CROSS CALIBRATION AS IN EV4 AT 90 DEGRRES CONE AND 135 DEGREES CLOCK IN ALL SPIN MODE.

DESIGN DETAIL

CDS Byte Count Estimate 0

GO TO 90 DEGREES CONE AND 135 DEGREES CLOCK IS REQUIRED POSITION ACCOMPLISHED AS PART OF UANTIA-01.

CHANGE CONTROL

Version	1	Page	01 of 01
Submission date	04/13/1990	Change Date	/ /
Figure attached (Y/N)	N	Changed by	

LIVS90313134S_NEW2.DAT

Nov-18, 90 KES

ANTISUN Map #2

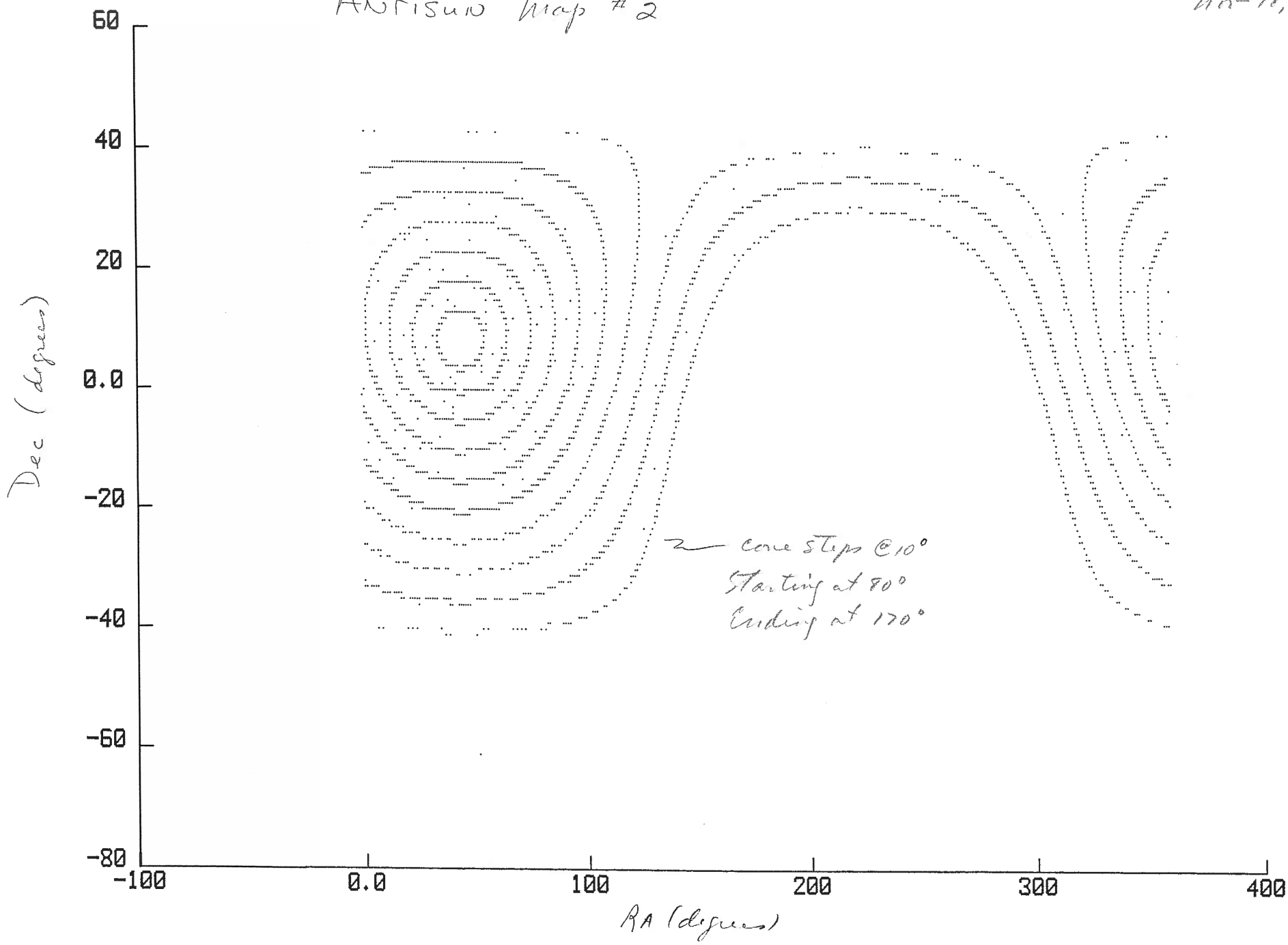

GALILEO ORBIT ACTIVITY PLAN (OAP)
04/18/1990 08:36

ACTIVITY ID: E1HUCROSS-02
START TIME: 90-314/01:00:00

Activity ID:	ORBIT E1 TARGET H OAPEL UCROSS MULTI - SEQ NO 02
Title	UVS/EUV CROSS CALIBRATION
Requestor	JAJELLO
Working Group	MWG Bottom Label CROSSCAL Plot Key UVS1

UTC TIMING BLOCK

	(YY-DDD/HH:MM:SS)
Start Time	90-314/01:00:00
End Time	90-316/17:14:00
Duration	002/16:14:00

AACS/DMS/DOWNLINK

Instruments Used:	DDS	N	EPD	N	HIC	N	MAG	N	NIMS	N	PLS	N
	PPR	N	PWS	N	RS	N	SSI	N	UVS	Y	EUV	Y

Scan Platform Reserved Y Earth Referenced N
Spin Status (All/Dual) A Coop Imaging Required N DMS Activity NONE
Data Format/RT Downlink 7.68

OBSERVATION OBJECTIVE

UVS STUDY OF OH(3050A) DISTRIBUTION IN THE INNER SOLAR SYSTEM FROM COMETOIDS.

DESIGN DETAIL

CDS Byte Count Estimate 54

UVS F-CHANNEL STUDY OF OH(3050A) AT 120 DEGREE ANGLE. UVS F-CHANNEL AND SCAN PLATFORM CONE ANGLE SET UP AS PART OF UANTIA-02.

TIME	PA	DESCRIPTRION
316/17:00:00	CMDRS	CRUISE MODE
316/17:02:00	PCREST	START A/S TO D/S XSITION

BYTES: PCREST=40
CMDRS=14

TOTAL= 54 BYTES

CHANGE CONTROL

Version	3	Page	01 of 01
Submission date	04/13/1990	Change Date	04/18/1990
Figure attached (Y/N)	N	Changed by	JAJELLO

GALILEO ORBIT ACTIVITY PLAN (OAP)
04/18/1990 09:10

ACTIVITY ID: E1HUANTIA-02
START TIME: 90-313/17:00:00

Activity ID: ORBIT E1 TARGET H OAPEL UANTIA MULTI - SEQ NO 02
Title UVS ANTISUN MAP-ALLSPIN
Requestor JAJELLO
Working Group MWG Bottom Label ANTISUN Plot Key UVS1

UTC TIMING BLOCK

(YY-DDD/HH:MM:SS)

Start Time 90-313/17:00:00
End Time 90-314/00:59:00
Duration 000/07:59:00

AACS/DMS/DOWNLINK

Instruments Used: DDS N EPD N HIC N MAG N NIMS N PLS N
PPR N PWS N RS N SSI N UVS Y EUV N
Scan Platform Reserved Y Earth Referenced N
Spin Status (All/Dual) A Coop Imaging Required N DMS Activity NONE
Data Format/RT Downlink 7.68

OBSERVATION OBJECTIVE

TO MEASURE INTERPLANETARY LYMAN ALPHA GRID POINTS WITH 10 DEGREE RESOLUTION OVER ENTIRE ANTI SUN HEMISPHERE. THE UVS WILL BE COMMANDED TO LYMAN-ALPHA MINISCAN MODE FOR ALL 15 DIFFERENT CONE ANGLES . OBJECTIVES ARE TO : 1) MEASURE 27 DAY SOLAR LYMAN ALPHA VARIATION,2) CROSS CALIBRATE WITH EUV AND 3) MAP ANTI SUN H LYMAN -ALPHA FROM INTERSTELLAR WIND. FOR S/N =33 (3% STATISTICS) THE ANGULAR RESOLUTION IN THE SKY IS 7 DEGREES IN CLOCK AND CONE.

DESIGN DETAIL

CDS Byte Count Estimate 344

TIME (RIMS)	PA	DESCRIPTION
SPACECRAFT IS IN ALL SPIN MODE		
4	ALSPINSP	CONE =80,CLOCK=180
36		CONE=87,CLOCK=180
68		CONE=94,CLOCK=180
100		CONE=101,CLOCK=180
132		CONE=108,CLOCK=180
164		CONE=115,CLOCK=180
196		CONE=122,CLOCK=180
228		CONE=129,CLOCK=180
260		CONE=136,CLOCK=180
292		CONE=143,CLOCK=180
324		CONE=150,CLOCK=180
356		CONE=157,CLOCK=180

388		CONE=164,CLOCK=180
420		CONE=170,CLOCK=180
455		CONE=120,CLOCK=180
1	CMDRS	UVS TO OH(3050A)

CDS WORD COUNT:

CMDRS 1 x 14= 14
ALLSPINSP= 22*15=330

TOTAL= 344 BYTES

1990-333/13-15

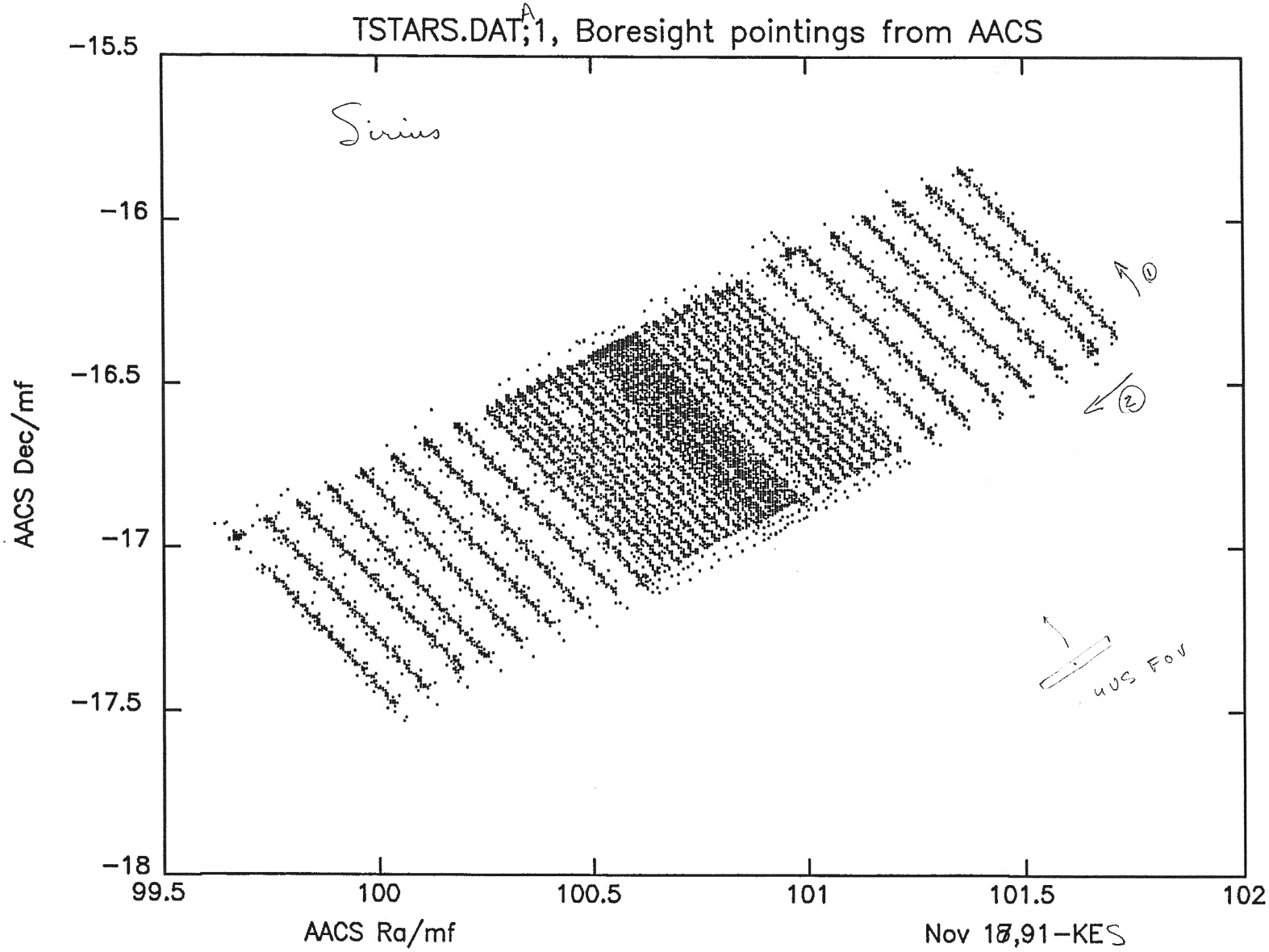

GALILEO ORBIT ACTIVITY PLAN (OAP)
07/17/1990 17:48

ACTIVITY ID: E1HUGEOTL-01
START TIME: 90-342/12:19:34

Activity ID:	ORBIT E1 TARGET H OAPEL UGEOTL MULTI - SEQ NO 01
Title	UVS GEOTAIL #1
Requestor	JAJELLO
Working Group	MWG Bottom Label SKY Plot Key UVS1

EPOCH TIMING BLOCK

(EPO+DDD/HH:MM:SS)

Start Time	EEE-000/08:15:00
End Time	EEE-000/07:30:01
Duration	000/00:44:59

AACS/DMS/DOWNLINK

Instruments Used:	DDS	N	EPD	N	HIC	N	MAG	N	NIMS	N	PLS	N
	PPR	N	PWS	N	RS	N	SSI	N	UVS	Y	EUV	N

Scan Platform Reserved Y Earth Referenced N
Spin Status (All/Dual) D Coop Imaging Required N DMS Activity NONE
Data Format/RT Downlink 28.8

OBSERVATION OBJECTIVE

THE OBJECTIVE OF THE GEOTAIL OBSERVATION IS TO STUDY THE DISTRIBUTION OF FAST HYDROGEN ATOMS CREATED BY CHARGE EXCHANGE OF H ATOMS WITH FAST PROTONS AND EXOSPHERIC H UNDERGOING SOLAR LYMAN ALPHA RADIATION PRESSURE. THE HIGH RESOLUTION MAP OF THE HIGH ALTITUDE GEOCORONAL EXTENSION IN THE ANTISUNWARD DIRECTION IS MADE BY UVS. THE UVS MEASUREMENTS AT ~30 TIMES THE SENSITIVITY OF EUV WILL BE CROSS CALIBRATED WITH SIMULTANEOUS MEASUREMENTS WITH EUV. THIS GEOTAIL OBSERVATION IS AT 90 DEGREES CONE. SLOW SLEW FROM +44 DEG ABOVE TO -44 DEG BELOW THE ECLIPTIC PLANE AT A SLEW RATE OF ABOUT 2 DEG/MINUTE (581 MICRORADIANS/SECOND). THE SECOND OBSERVATION IS PERFORMED BY A SLOW SLEW ABOUT ANTISUNWARD DIRECTION (180 DEG OR AS CLOSE AS ALLOWED TO 180 DEGREES CONE). SCAN FROM NORTH TO SOUTH OR EAST TO WEST OF ECLIPTIC PLANE ABOUT +/- 10 DEG FROM ANTI SUN DIRECTION. THE FIRST OBSERVATION REQUIRES NEGOTIATION WITH PWS ON MOTION OF GRATING. THE CURRENT PLAN IS TO TIME SHARE IN A PICKET FENCE ARRANGEMENT WITH PWS THE USE OF THE GRATING. THE GRATING WILL BE STEPPED IN A 16 STEP MINI SCAN FOR 2-RIMS AND IN A 1-STEP FOR 2 RIMS ETC. THIS ARRANGEMENT ALLOWS FOR 1 CMDRS WITH ABOUT 16 UVS COMMANDS (8 PAIRS WITH A MAX OF 18 COMMANDS). THE LAST PAIR IS USED FOR UVS 16-STEP TO COMPLETE OBSERVATION AND SHIFT TO CRUISE MODE AT END. THE WORDS FOR THE MEASUREMENT ARE TO COME FROM PWS.

DESIGN DETAIL

CDS Byte Count Estimate 112

no 1-step page

Time (RIM)	PA	Comment
4	TARGET 36	Set up SLEW
4	CSMOS 24	Slow slew STRIP (88 DEG)

```
44                          END SLOW SLEW
3                 CMDRS 15 X 18              SET UP
4                 CMDRS        L alpha miniscan-16 STEP
6,8,10,12..... 32,34 8 PAIRS END 1-STEP  AT RIM 34 CM -1 STEP,16STEP
                       ,1STEP ETC
36                16-STEP TILL END
44                CMDRS        L alpha MINI SCAN or cruise position OR G-G SCAN
```

CHANGE CONTROL

Version	6	Page	of 06
Submission date	03/06/1990	Change Date	7/1990
Figure attached (Y/N)	Y	Changed by	ELLO

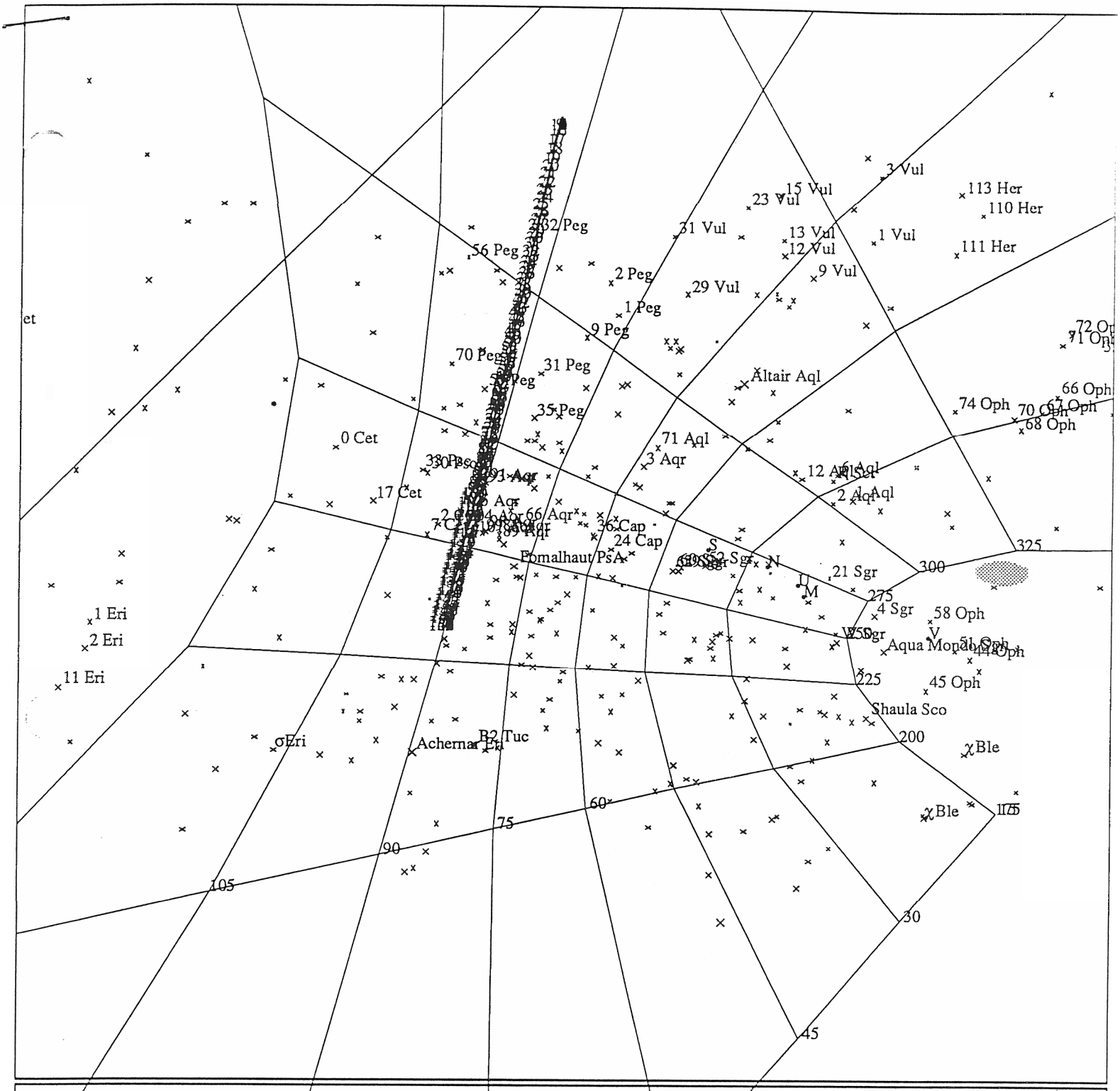

POINTER C3.1 paddy: 9/25/1990 14:15:53

P8.E1HUGEOTL_0 I

ISDF:isdf-ve11-pa1

CENTRAL BODY:EARTH

.I:m.e1hugeotl01

EPHE:/gptr/eph/EARTH-070590.t

PERIAPSIS:90-342/20:35:31.21

THDR:EEE 90-342/20:34:11.000 -CDS 485:52:0

ACTIVITY:E1HUGEOTL_01

FIGURE 1

GALILEO ORBIT ACTIVITY PLAN (OAP) ACTIVITY ID: E1HUGEOTL-02
07/09/1990 19:27 START TIME: 90-342/18:29:33
10

Activity ID:	ORBIT	E1	TARGET	H	OAPEL	UGEOTL	MULTI	-	SEQ NO	02	
Title	UVS GEOTAIL #2										
Requestor	JAJELLO										
Working Group	MWG		Bottom Label		SKY				Plot Key	UVS1	

EPOCH TIMING BLOCK

	(EPO+DDD/HH:MM:SS)
Start Time	EEE-000/02:05:01
End Time	EEE-000/01:33:01 → 01:43:01
Duration	000/00:32:00 → 21:59

AACS/DMS/DOWNLINK

Instruments Used:	DDS	N	EPD	N	HIC	N	MAG	N	NIMS	N	PLS	N	
	PPR	N	PWS	N	RS	N	SSI	N	UVS	Y	EUV	N	
Scan Platform Reserved		Y	Earth Referenced					N					
Spin Status (All/Dual)		D	Coop Imaging Required					N	DMS Activity				NONE
Data Format/RT Downlink		28.8											

OBSERVATION OBJECTIVE

THE OBJECTIVE OF THE GEOTAIL OBSERVATION IS TO STUDY THE DISTRIBUTION OF FAST HYDROGEN ATOMS CREATED BY CHARGE EXCHANGE OF H ATOMS WITH FAST PROTONS. THE HIGH RESOLUTION MAP OF THE HIGH ALTITUDE GEOCORONAL EXTENSION IN THE ANTISUNWARD DIRECTION IS MADE BY UVS. THE UVS MEASUREMENTS AT ~30 TIMES THE SENSITIVITY OF EUV WILL BE CROSS CALIBRATED WITH SIMULTANEOUS MEASUREMENTS WITH EUV. THIS GEOTAIL OBSERVATION IS AT 90 DEGREES CONE. SLOW SLEW FROM +44 DEG ABOVE TO -44 DEG BELOW THE ECLIPTIC PLANE AT A SLEW RATE OF ABPOT 2 DEG/MINUTE (581 MICRORADIANS/SECOND). THE SECOND OBSERVATION IS PERFORMED BY A SLOW SLEW ABOUT ANTISUNWARD DIRECTION (180 DEG OR AS CLOSE AS ALLOWED TO 180 DEGREES CONE). SCAN FROM NORTH TO SOUTH OR EAST TO WEST OF ECLIPTIC PLANE ABOUT +/- 10 DEG FROM ANTI SUN DIRECTION.

DESIGN DETAIL

CDS Byte Count Estimate 98

See change P8 7/22/90

Time (RIM)	PA	Comment
4	TARGET	Set up SLE
4	CSMOS	Slow slew STRIP (20 deg in cone = E/W scan in ecliptic plane)
32		END SLOW SLEW
3	CMDRS	L alpha miniscan
32	CMDRS	L alpha MINI SCAN or cruise mode OR G-G SCAN

EARTH #1: C/A - 1HR 30 MIN

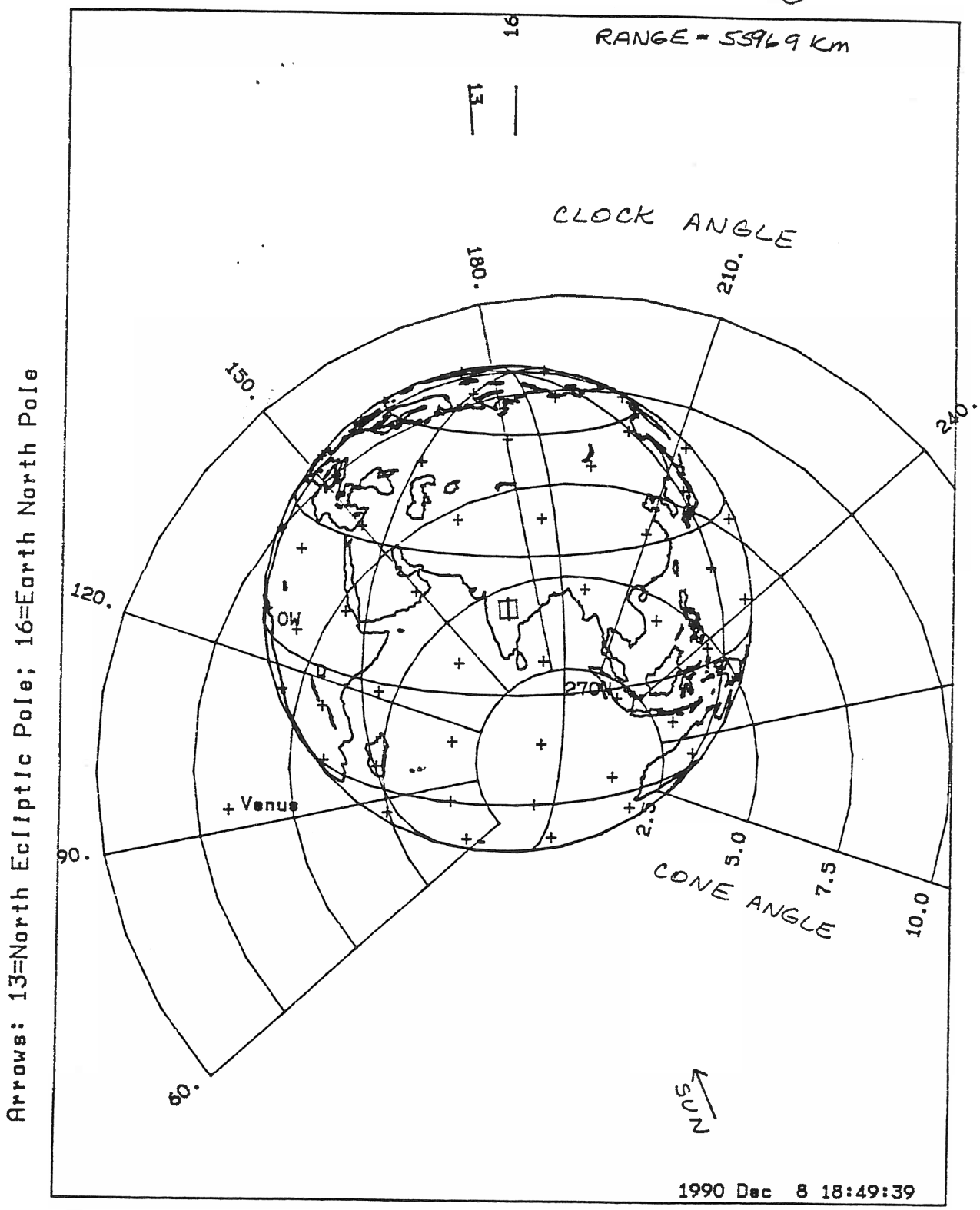

Arrows: 13=North Ecliptic Pole; 16=Earth North Pole

Cone/Clock Angles Are Sun-Referenced

~ GEOTAIL #2

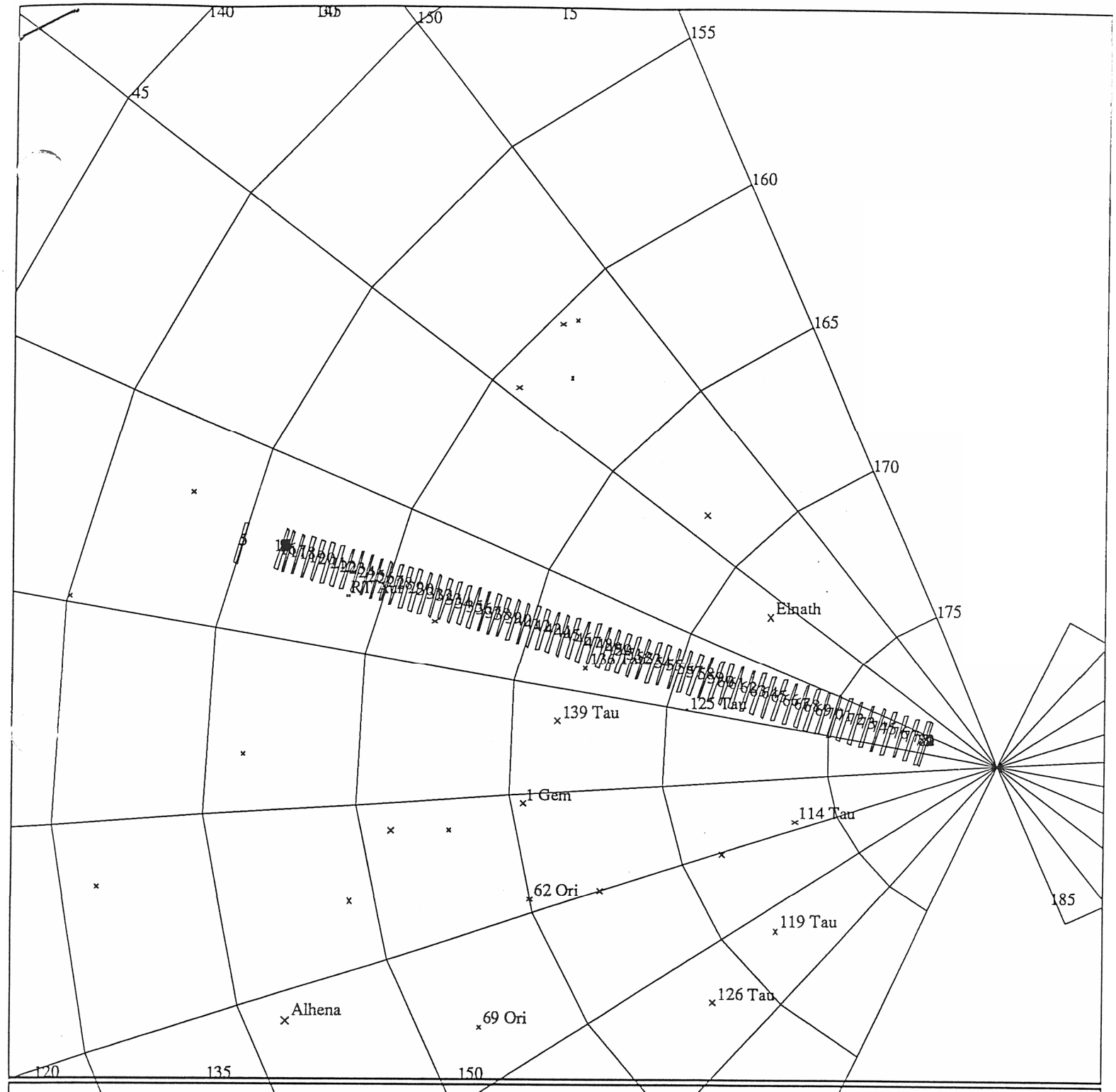

POINTER C3.1 paddy: 9/25/1990 14:59:33
P2.E1HUGEOTL_0
ISDF:isdf-ve11-pa1
CENTRAL BODY:EARTH
I:m.e1hugeotl02
EPHE:/gptr/eph/EARTH-070590.t
PERIAPSIS:90-342/20:35:31.21
THDR:EEE 90-342/20:34:11.000 -CDS 119:54:0
ACTIVITY:E1HUGEOTL_02

FIGURE 2

GALILEO ORBIT ACTIVITY PLAN (OAP) ACTIVITY ID: E1WELMDFT-01
07/17/1990 13:01 START TIME: 90-342/18:35:34

Activity ID:	ORBIT E1 TARGET W OAPEL ELMDFT MULTI - SEQ NO 01
Title	EUV DAY/NIGHT EARTH LIMB DRIFT
Requestor	BWAGGONER
Working Group	AWG Bottom Label Plot Key EUVHIC

EPOCH TIMING BLOCK

	(EPO+DDD/HH:MM:SS)
Start Time	EEE-000/01:59:00
End Time	EEE+000/01:29:59
Duration	000/03:92:59

AACS/DMS/DOWNLINK

Instruments Used:	DDS	N	EPD	N	HIC	N	MAG	N	NIMS	N	PLS	N
	PPR	N	PWS	N	RS	N	SSI	N	UVS	N	EUV	Y

Scan Platform Reserved N Earth Referenced N
Spin Status (All/Dual) D Coop Imaging Required N DMS Activity RECORD
Data Format/RT Downlink 28.8

OBSERVATION OBJECTIVE

Clock Angle: 1
Sectors 125
Scans per: 7

This measurement will search for emissions of H, He, and O+ in the 500 to 1250 region of the spectrum starting in the exosphere on the nightside and ending in the exosphere on the dayside. The largest angular size of the Earth will be around 120 degrees. At some point prior to the limb crossing the FPN will be changed to prevent saturation of the data rate in Lyman-Alpha signal. At 1 hr 30 minute after closest approach an EUVOFF will be issued.

DESIGN DETAIL

CDS Byte Count Estimate 67

The EUV will be configured in encounter mode to sample the full spectral range LESS LYMAN-ALPHA 7 CENTER CHANNELS in a swath of approximately 240 degrees. The actual command parameters have yet to be determined.

time	PA	comment
--1h	UTILITY 0	SET UP FOR fpn
RIM		
0	24 DML	11 BYTES FPN
2	EUVcmd	CONFIGURE EUV IN CRUISE MODE

CHANGE CONTROL

Version	3	Page	01 of 11
Submission date	03/14/1990	Change Date	07/17/1990
Figure attached (Y/N)	Y	Changed by	JAJELLO

Tue Jul 3 15:56:21 2012

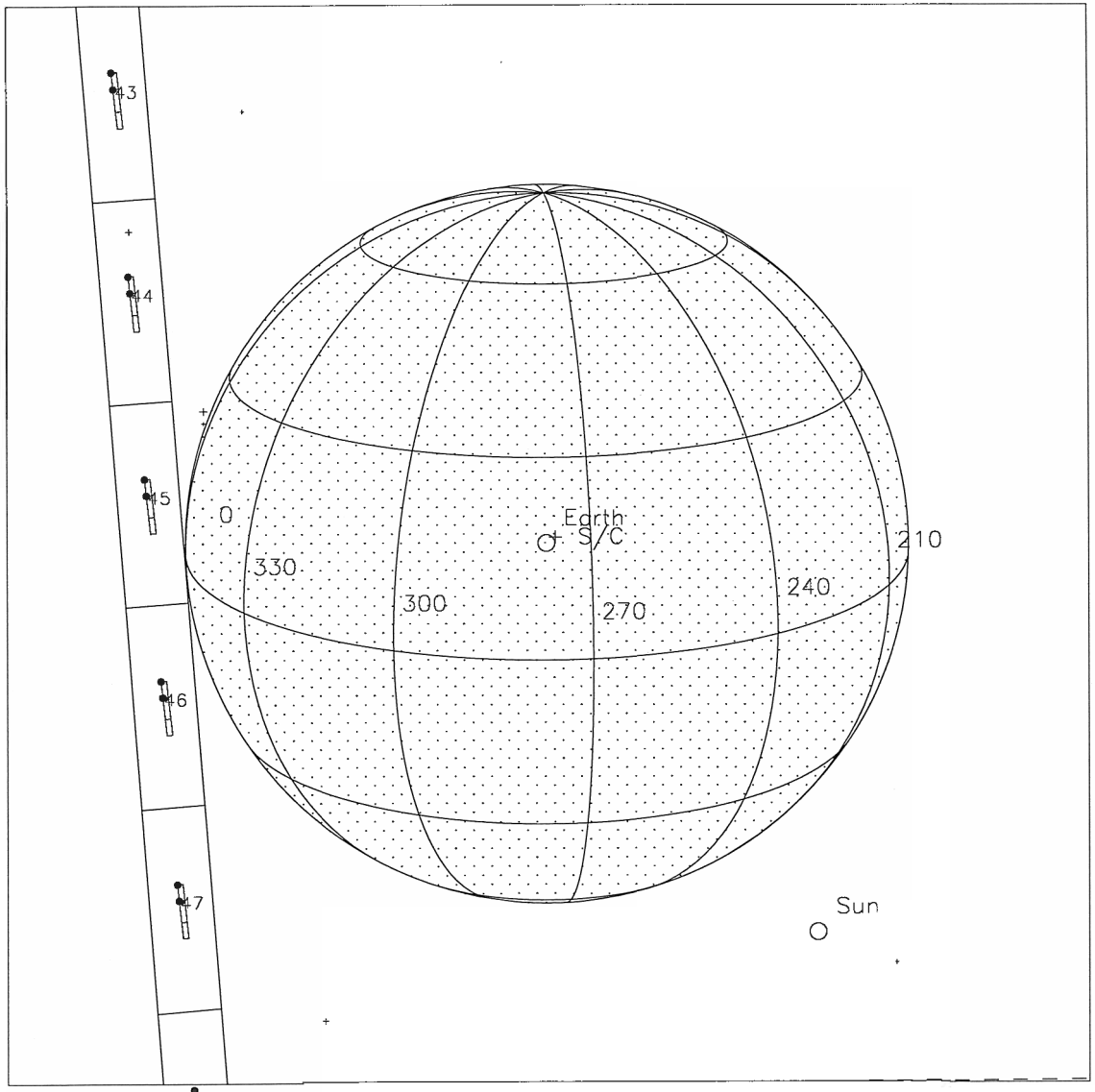

Start UTC_TIME : 1990-342 // 18:35:34.000
No End Time :
Start SCLK : 1/00610097:62:9:0

Target Body : EARTH
Target Ra/Dec : 258.71/-17.29 Deg
S/C to Body Center : 72473.99 Km (11.362872 Re)
Z-axis Pointing (Ra / Dec) : 175.28 / 2.58 Deg

GALILEO ORBIT ACTIVITY PLAN (OAP) ACTIVITY ID: E1WUNITGL-01
07/16/1990 09:50 START TIME: 90-342/20:24:34

Activity ID:	ORBIT	E1	TARGET	W	OAPEL	UNITGL	MULTI	-	SEQ NO	01		
Title	UVS NIGHT AIRGLOW OBSERVATION											
Requestor	BWAGGONER											
Working Group	AWG	Bottom Label							Plot Key	UVS1		

EPOCH TIMING BLOCK

(EPO+DDD/HH:MM:SS)

Start Time	EEE-000/00:10:00
End Time	EEE-000/00:00:30
Duration	000/00:09:30

AACS/DMS/DOWNLINK

Instruments Used:	DDS	N	EPD	N	HIC	N	MAG	N	NIMS	Y	PLS	N
	PPR	Y	PWS	N	RS	N	SSI	Y	UVS	Y	EUV	N
Scan Platform Reserved	Y	Earth Referenced	N									
Spin Status (All/Dual)	D	Coop Imaging Required	N	DMS Activity RECORD								
Data Format/RT Downlink	28.8											

OBSERVATION OBJECTIVE

This observation will observe night airglow morphology and altitude variations of NO gamma (2363), and NO delta (1980) emissions. NIMS will be sharing this observation as they study mesospheric water abundances. Altitudes will start at 225 km and be sampled to the surface.

DESIGN DETAIL

CDS Byte Count Estimate 164

This observation will begin as the dark limb of the Earth 'rises' above 90 degrees cone. The UVS will slew onto the planet and the NIMS will ride along. A total of five pairs of these slews will be possible before cone pole constraints stop the dark limb scans.
scitlm 15
target 26
csmos 90
cmdrs 28

CHANGE CONTROL

Version	2	Page	01 of 07
Submission date	03/14/1990	Change Date	07/16/1990
Figure attached (Y/N)	Y	Changed by	BWAGGONER

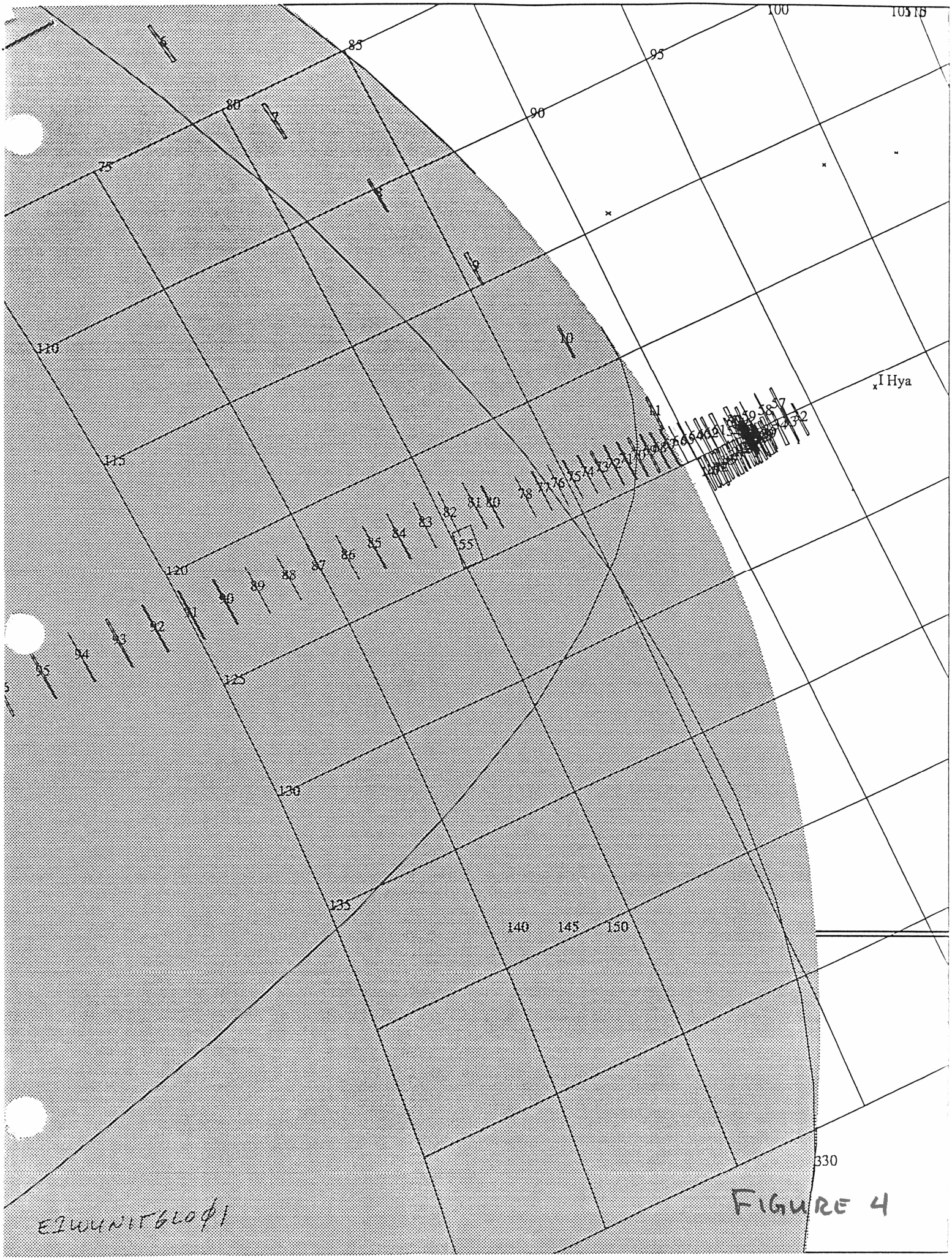

FIGURE 4

E2WUNIT6L0Ø1

EARTH #1: C/A - 2 MIN

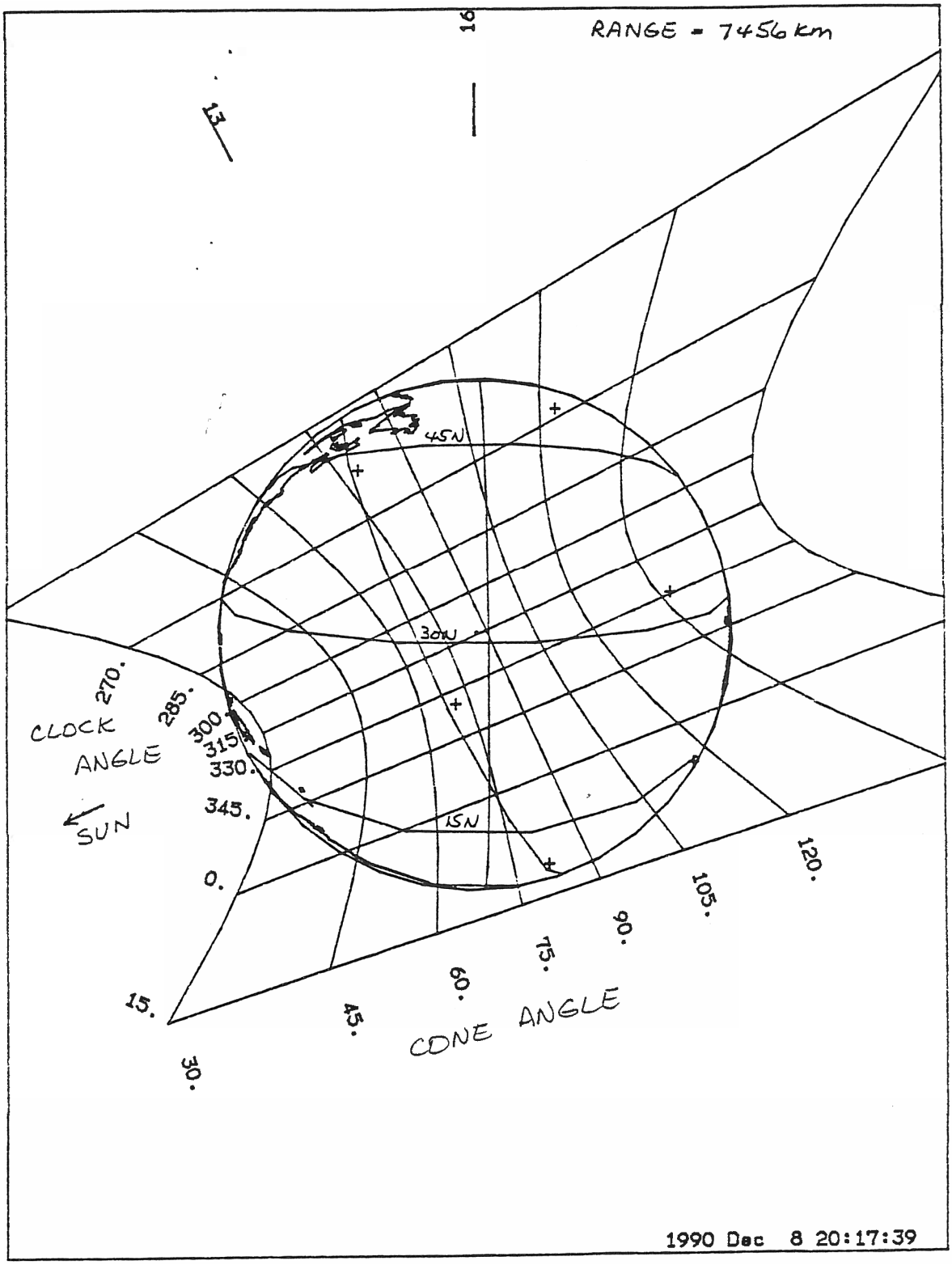

Arrows: 13=North Ecliptic Pole; 16=Earth North Pole

Cone/Clock Angles Are Sun-Referenced

~ NITGIO ENDS

GALILEO ORBIT ACTIVITY PLAN (OAP) ACTIVITY ID: E1WUNEWS -01
07/16/1990 09:49 START TIME: 90-342/23:35:34

Activity ID: ORBIT E1 TARGET W OAPEL UNEWS MULTI - SEQ NO 01
Title UVS NORTH EAST WEST SOUTH MAP
Requestor BWAGGONER
Working Group AWG Bottom Label Plot Key UVS1

EPOCH TIMING BLOCK

(EPO+DDD/HH:MM:SS)

Start Time EEE+000/03:01:00
End Time EEE+000/03:32:59
Duration 000/00:31:59

AACS/DMS/DOWNLINK

Instruments Used: DDS N EPD N HIC N MAG N NIMS Y PLS N
PPR Y PWS N RS N SSI Y UVS Y EUV N
Scan Platform Reserved Y Earth Referenced N
Spin Status (All/Dual) D Coop Imaging Required Y DMS Activity NONE
Data Format/RT Downlink 115

OBSERVATION OBJECTIVE

The UNEWS scans will provide a valuable set of control data for comparison with the data acquired during the NIMS Antartica Map, as well as provide several swaths of data regarding ozone abundances over the antarctic. The North South polar swath will
start near the equator of the Earth and will be compared with the Equatorial swath and the 55 degree latitude swath in the hope that slight variations may be observed in the polar ozone emissions.

DESIGN DETAIL

CDS Byte Count Estimate 187

Assume F, G Full Scan

target 26
ssi 20
csmos 80
cmdrs 75
scitlm 15
The three swaths will be executed as follows:
NS will start at the south pole and will stop at the Equator
EW equatorial will cross the Earth near the Equator and start and end off the planet
EW 55 degree will cross at this latitude and start and end off the plane

Instrument commands are TBD. South?

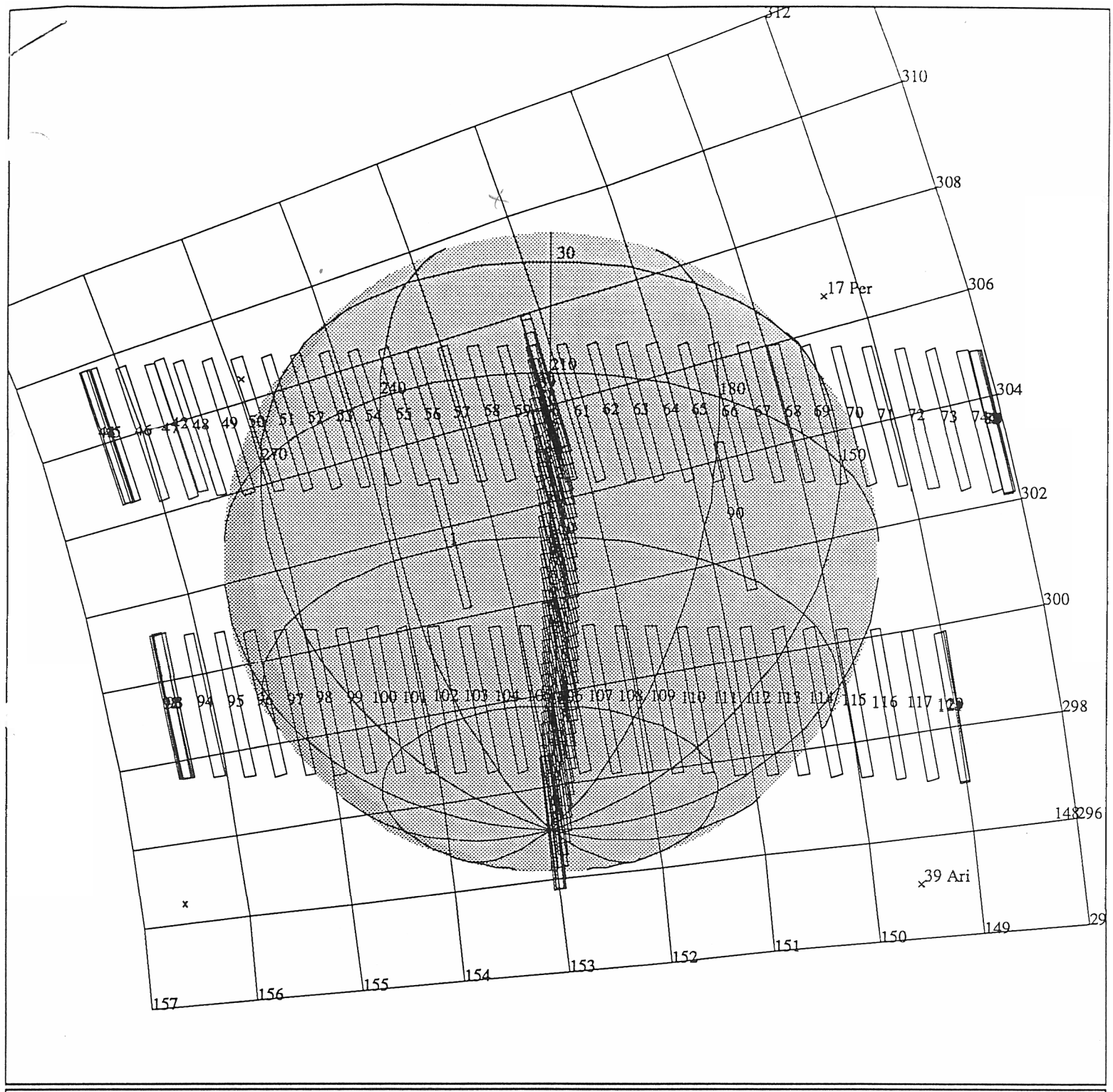

POINTER C3.1 paddy: 9/26/1990 9:16:43

P3.E1WUNEWS__0 l

ISDF:isdf-ve11-pa1

NTRAL BODY:EARTH

NI:m.e1wunews01

EPHE:/gptr/eph/EARTH-070590.t

PERIAPSIS:90-342/20:35:31.21

THDR:EEE 90-342/20:34:11.000 +CDS 179:39:0

ACTIVITY:E1WUNEWS__01

FIGURE 5.

Tue Jun 19 20:36:59 2012

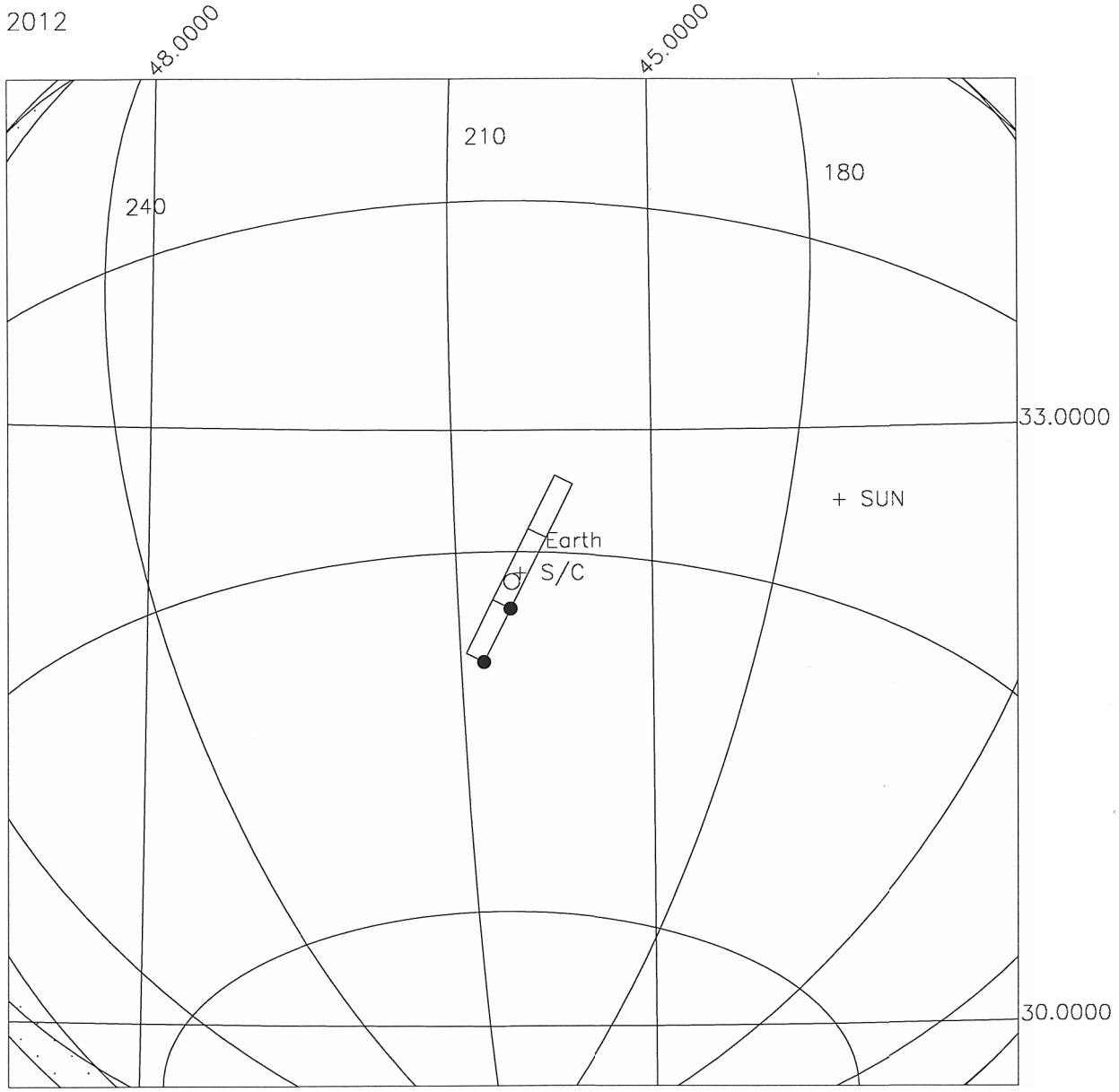

Start UTC_TIME : 1990-342 // 23:35:34.000
End UTC_TIME : 1990-343 // 23:35:34.000
Start SCLK : 1/00610394:35:9:1

Target Body : EARTH
Target Ra/Dec : 45.84/ 32.24 Deg
S/C to Body Center : 107314.5 Km (16.825363 Re)
Z-axis Pointing (Ra / Dec) : 175.28 / 2.58 Deg

Wed Aug 15 19:42:19 2012

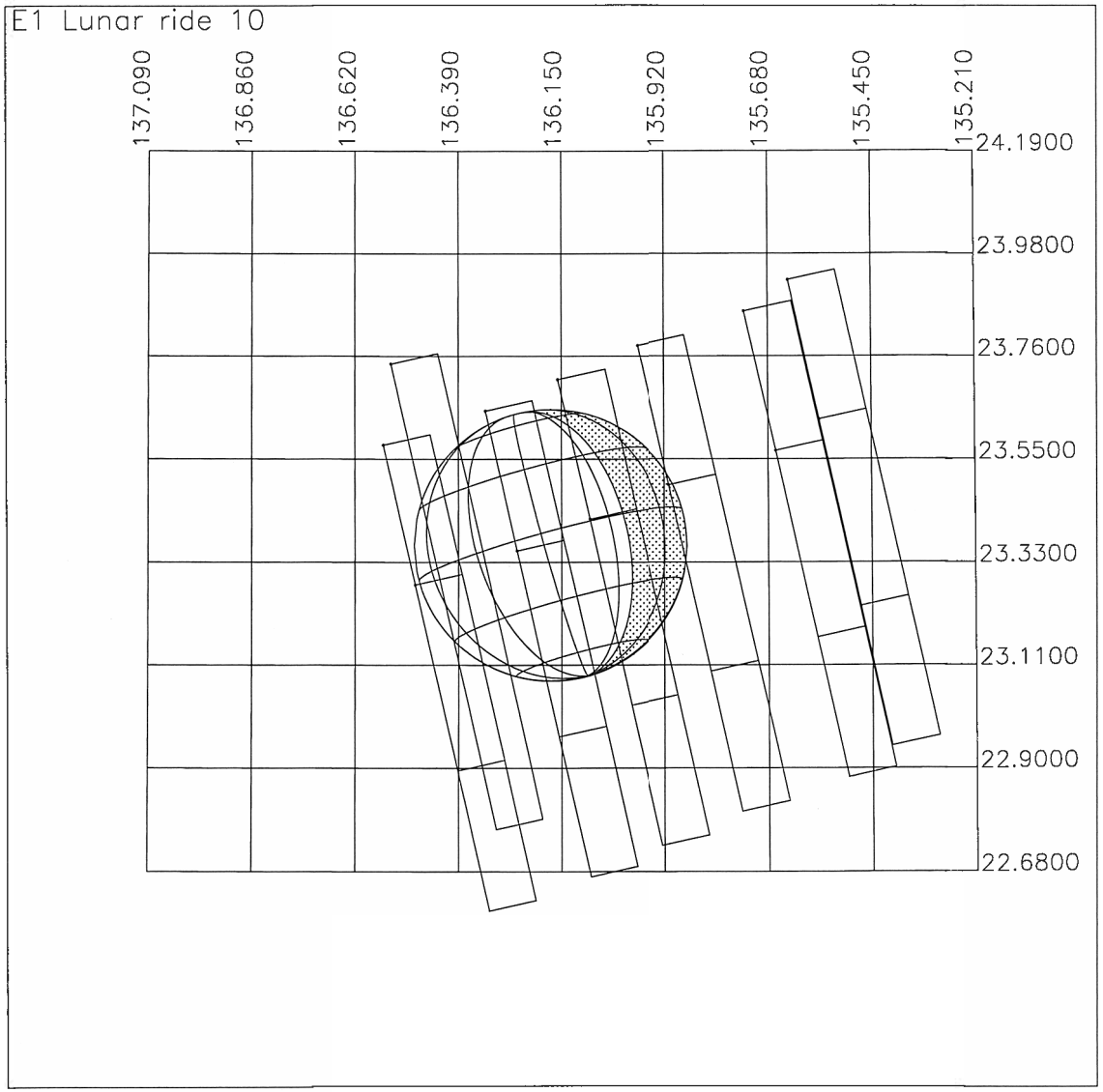

Start UTC_TIME : 1990-343 // 03:23:40.000
End UTC_TIME : 1990-343 // 03:30:00.000
Start SCLK : 1/00610619:89:9:2
Delta Time between FOV : 60.00000
FOVs : F Channel(0.1x0.4), N/G Channel(0.1x1.0)

Target Body : MOON
Target Ra/Dec : 136.18/ 23.37 Deg
S/C to Body Center : 349382.9 Km (201.09525 Rm)
Z-axis Pointing (Ra / Dec) : 254.64 / -22.74 Deg

LUNAR RIDE 15

6-APR-92 21:16:41

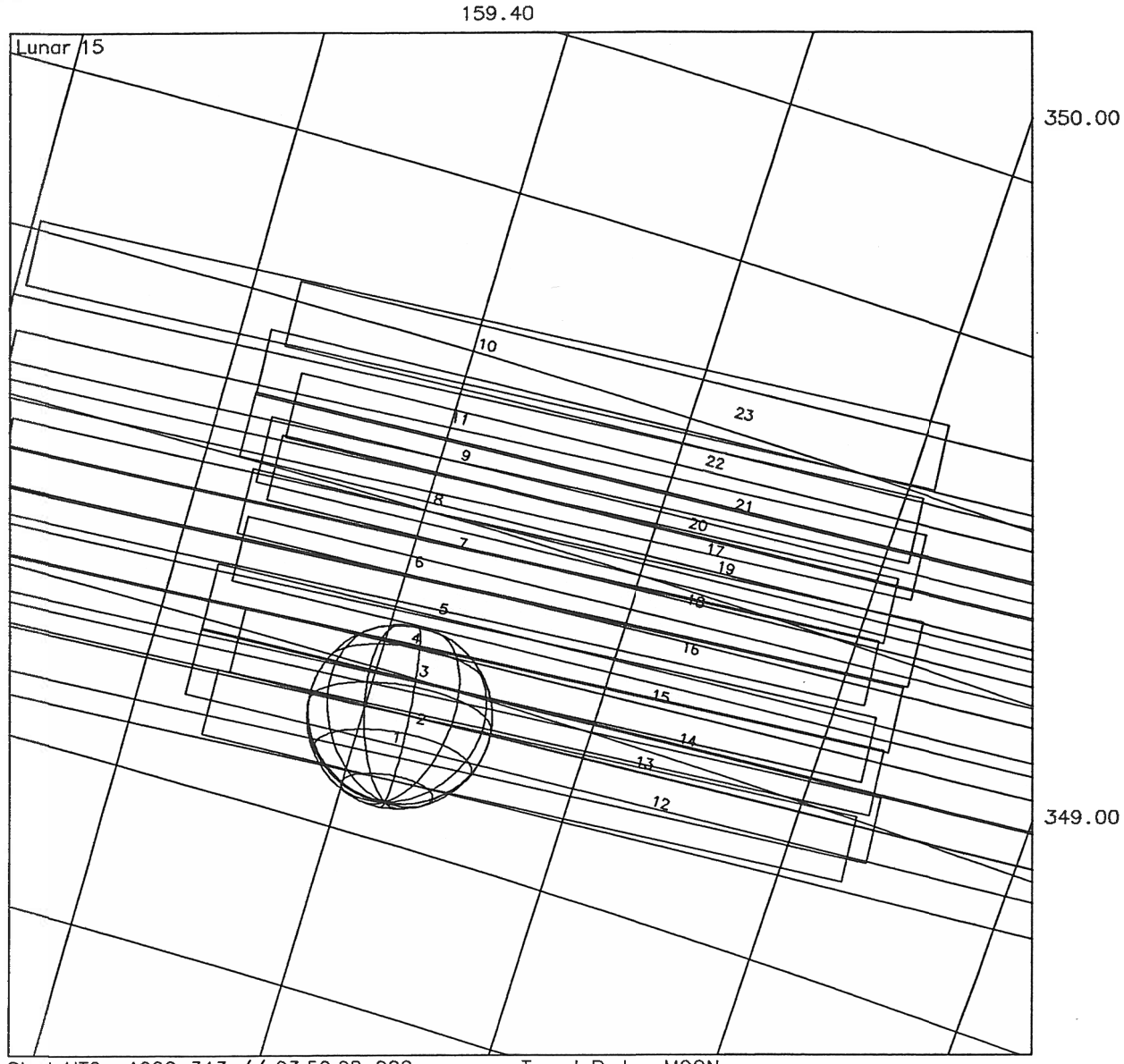

Start UTC : 1990-343 // 23:52:08.000
End UTC : 1990-344 // 00:03:16.000
Start SCLK :1/00611834:87:0:0
Time between FOV : 30.00000 sec

Target Body : MOON
Target Clock/Cone : 351.84/160.45
S/C to Body Center : 719623.7 km
FOV for the N/G channels

Antarctic #1

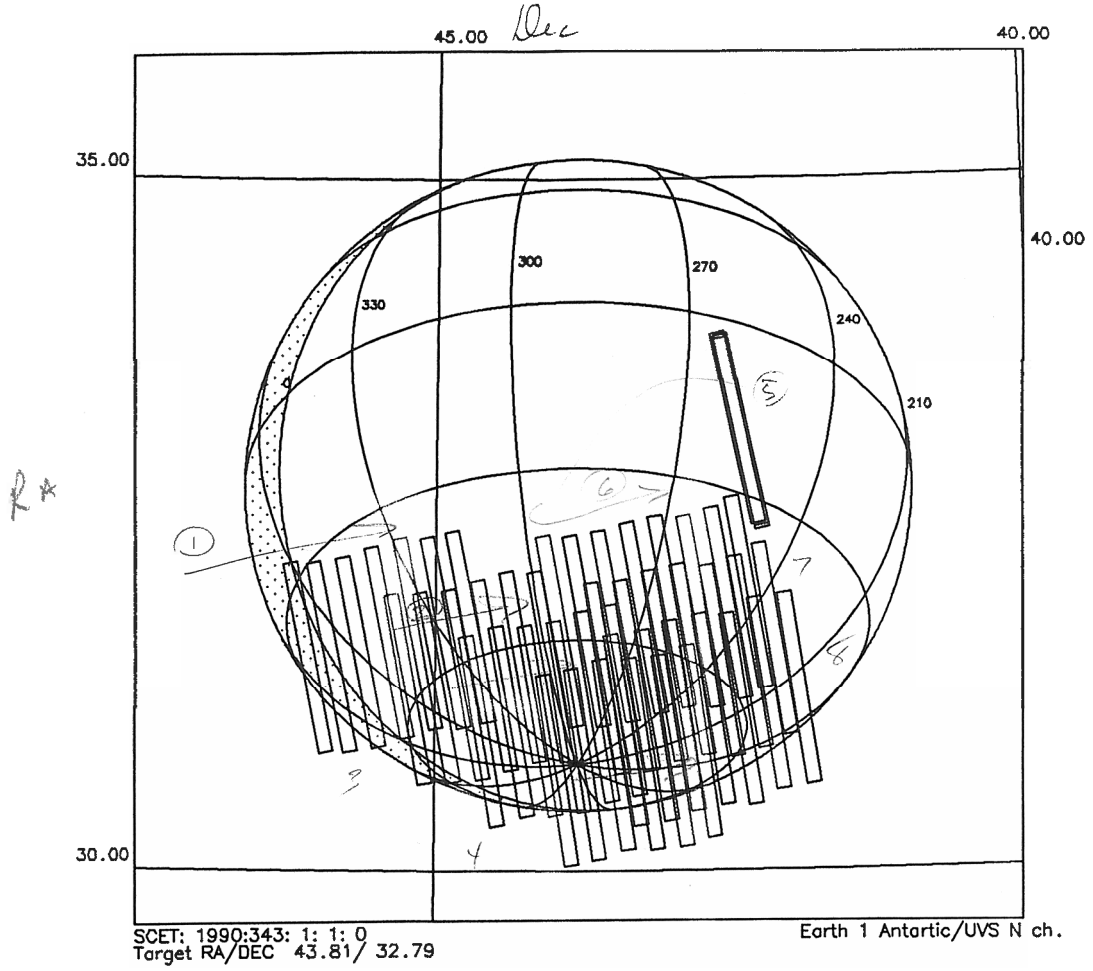
45.00
Dec
40.00
35.00
40.00
30.00
300
270
330
240
210
RA
1
2
3
4
5
6
7
8
SCET: 1990:343: 1: 1: 0
Target RA/DEC 43.81/ 32.79
Earth 1 Antartic/UVS N ch.

GALILEO ORBIT ACTIVITY PLAN (OAP) ACTIVITY ID: E1LUATMOS-01
07/18/1990 11:41 START TIME: 90-344/13:49:10

Activity ID:	ORBIT E1 TARGET L OAPEL UATMOS MULTI - SEQ NO 01
Title	UVS LUNAR ATMOSPHERE OBSERVATION
Requestor	LTAMPPARI
Working Group	AWG Bottom Label Plot Key UVS1

UTC TIMING BLOCK

	(YY-DDD/HH:MM:SS)
Start Time	90-344/13:49:10
End Time	90-344/19:19:10
Duration	000/05:30:00

Needs further review

AACS/DMS/DOWNLINK

Instruments Used:	DDS	N	EPD	N	HIC	N	MAG	N	NIMS	N	PLS	N
	PPR	N	PWS	N	RS	N	SSI	N	UVS	Y	EUV	N

Scan Platform Reserved Y Earth Referenced N
Spin Status (All/Dual) D Coop Imaging Required N DMS Activity NONE
Data Format/RT Downlink 28.8

OBSERVATION OBJECTIVE

now (July 26) 1 scan on F mini on 3084 (32 step)
1 scan full F+G ~~now~~
3 scans G·G scans

July 24. Joe says scans ended up as 5 scans instead, acln off-D on body direction.

The UVS slit will be moved via a slow cone slew from 1.0 deg on one side of the moon to -1.0 deg on the other side and then back again. In other words the UVS slit will be rastered in a box mode. Slow slew rates of about 2 deg/1hour(~.010mr/s) will be used. This will allow UVS to integrate for long periods in any 0.1 deg slit width interval (3minutes). The UVS will search for the following possible atmospheric constituents, H, O, OH, and MgII. Predicted candidate wavelengths for miniscans - G: HI(1215.7), OI (1303.5)- F: ~~K~~S(1809), ~~M~~MgI (2852), ~~O~~H (3084). THE CURRENT SEQUENCE CALLS FOR ABOUT 1 1/2 HOURS OF F,G SCANS AND ABOUT 4 1/2 HOURS OF G,G SCANS ie TIME RATIO OF 1:3. THUS THE FIRST SCAN ACROSS THE MOON IS DONE IN F,G CHANNEL. THE OTHER 3 SCANS WILL BE DONE IN G,G SCAN MODE.AN ALTERNATIVE CONSIDERED IS TO DO THE FIRST 3 HALF THE MEASUREMENT IN F-channel AND THE SECOND HALF OF THE MEASUREMENT IN G-CHANNEL. THIS SCAN HAS THE ADVANTAGE OF SCANNING ACROSS THE MOON TWICE IN EACH CHANNEL. [THE F-CHANNEL measurement USES a ~~2~~-position 32-step scan. THE G-channel MODE USES a ~~3~~-position 16-step scan.] The ASD of the moon is <0.1 deg for EEE + 1 day. The UVS would like SSI support imaging during the F and G channel moon crossings. K no.

Scan is 2° and body 0.1

DESIGN DETAIL

CDS Byte Count Estimate 252

Better resolution in this one is need for F stuff

Commands are needed.
Observation:

time(MIN)	PA	Comment
4	target 26	set up slew
4	csmos 14	box mode (2scans)-up slew

84		down slew
164		up slew
244		down slew
3	cmdrs 42	set up commanding
4		F,G-channel
84		GG-channel
328		UVS cruise mode

SUPPPORT IMAGING

? & ?	SSI PA 34	SHUTTER AT BOTH F & G MOON CROSSING
	INITRS 61	
	SCITLM 15	

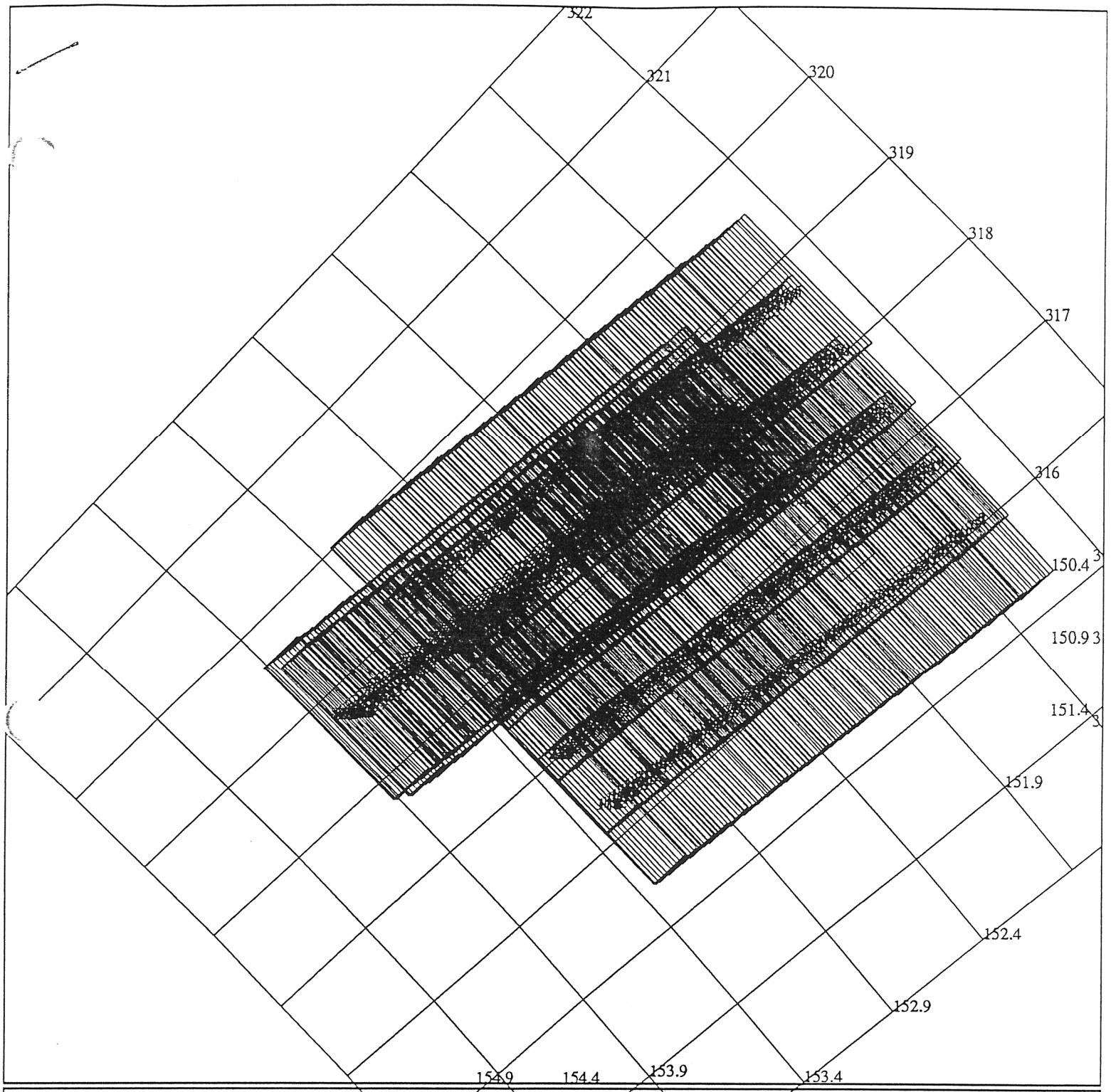

POINTER C3.1 paddy: 9/26/1990 13: 6: 7

P2.E1LULATMOS0 l

ISDF:isdf-ve11-pa1

CENTRAL BODY: MOON

NI:m.e1lulatmos01

EPHE:/gptr/eph/EARTH-070590.t

PERIAPSIS:90-342/20:35:31.21

THDR:EEE 90-342/20:34:11.000 +CDS 2499:20:0

ACTIVITY:E1LULATMOS01

FIGURE 9

GALILEO ORBIT ACTIVITY PLAN (OAP)
07/18/1990 11:50

ACTIVITY ID: E1HUSYSCN-01
START TIME: 90-344/19:54:10

Activity ID:	ORBIT E1 TARGET H OAPEL USYSCN MULTI - SEQ NO 01
Title	UV EARTH-MOON SYSTEM SCAN
Requestor	SEDBERG
Working Group	MWG Bottom Label Plot Key UVS1

UTC TIMING BLOCK

	(YY-DDD/HH:MM:SS)
Start Time	90-344/19:54:10
End Time	90-345/00:54:10
Duration	000/05:00:00

AACS/DMS/DOWNLINK

Instruments Used:	DDS	N	EPD	N	HIC	N	MAG	N	NIMS	N	PLS	N		
	PPR	N	PWS	N	RS	N	SSI	Y	UVS	Y	EUV	N		
Scan Platform Reserved		Y	Earth Referenced					N						
Spin Status (All/Dual)		D	Coop Imaging Required					Y	DMS Activity					
Data Format/RT Downlink		28.8												

OBSERVATION OBJECTIVE

does @ sweep have 2 grids? No: one @

TO MEASURE UV INTENSITY OF EARTH-MOON SYSTEM. CANTED RECTANGULARGRID (WITH RESPECT TO CONE/CLOCK SPACE) REPEATED TWICE CENTERED NEAR EARTH AND MOON AND SET UP TO SWEEP EARTH AND MOON WITHOUT BOTH APPEARING IN THE SLIT AT THE SAME TIME. #1 MAP IN [LYMAN ALPHA AND OI(1304A) IN G-CHANNEL] AND #2 OH(3084A) IN F-CHANNEL. EACH RECTANGLE IS 148 RIMS IN G-CHANNEL AND 148 RIMS IN F-CHANNEL WITH APPROXIMATELY 1 MINUTE FOR REPOSITIONING.

#1 has 2° grid for G chan; #2 has 0.5° grid for F chan.

DESIGN DETAIL

CDS Byte Count Estimate 268

See Faxed copy | July 20.

did we ever get the 180° clock diffr. w/Sam straight?

INITRS	10 + 9 + 9 * 2 + 14 + 20	= 61
TARGET	10 + 26	= 36
CSMOS	10 + 14 + 13 * (3-1)	= 50
CMDRS	10 + 2 * 14	= 38
SSI(2)	2 * (10 + 5 + 1 + 1)	= 68
SCITLM	10 + 5	= 15
	TOTAL	268

CHANGE CONTROL

Version	2	Page	02 of 06
Submission date	03/14/1990	Change Date	07/18/1990
Figure attached (Y/N)	Y	Changed by	JAJELLO

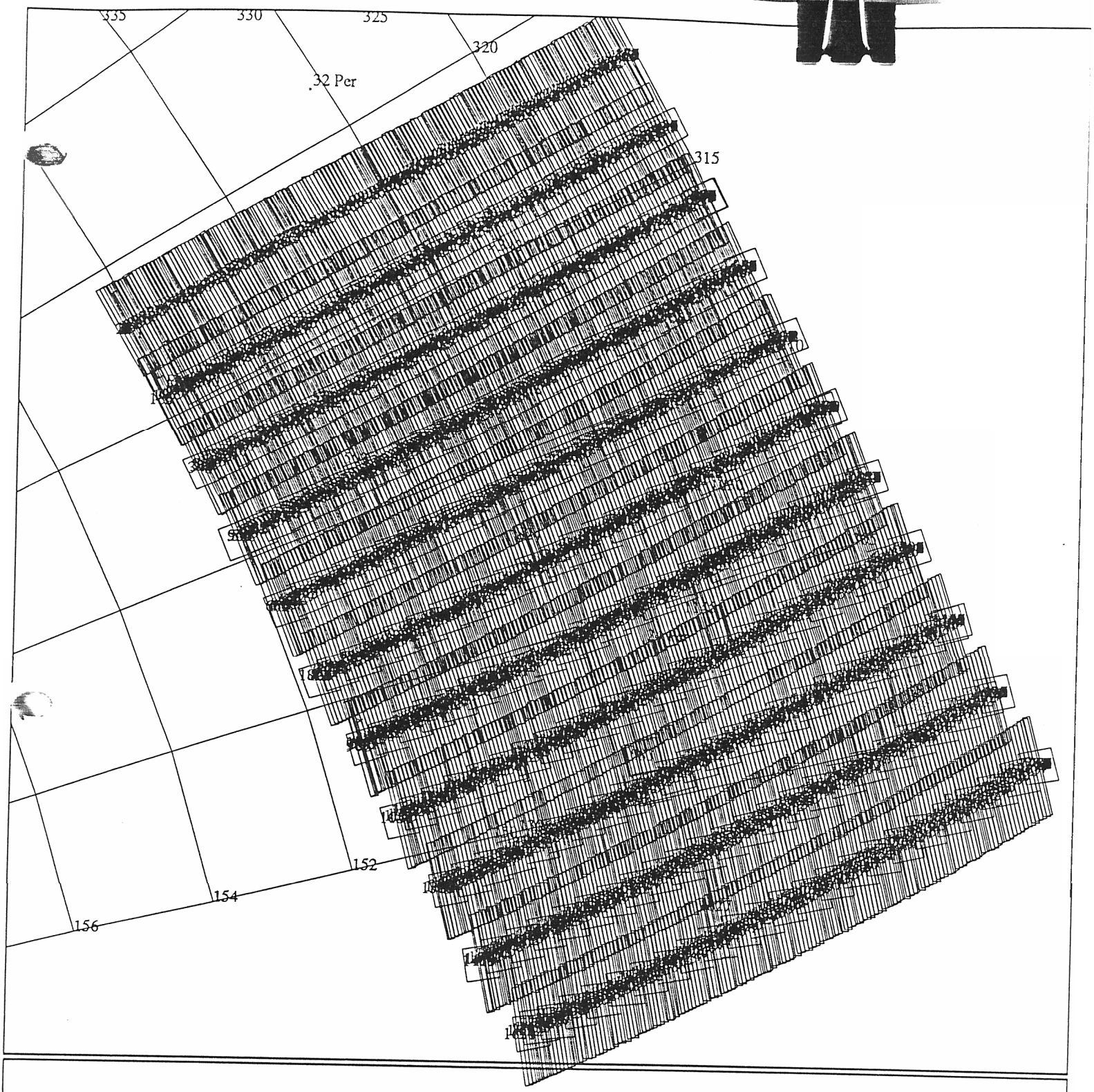

POINTER C3.1 paddy: 9/26/1990 13:42:42

P2.E1HUSYSCAN0

ISDF:isdf-ve11-pa1

NTRAL BODY:EARTH

I:m.e1husyscan01

EPHE:/gptr/eph/EARTH-070590.t

PERIAPSIS:90-342/20:35:31.21

THDR:EEE 90-342/20:34:11.000 +CDS 2798:00:0

ACTIVITY:E1HUSYSCAN01

FIGURE 10

Tue Jun 19 20:45:44 2012

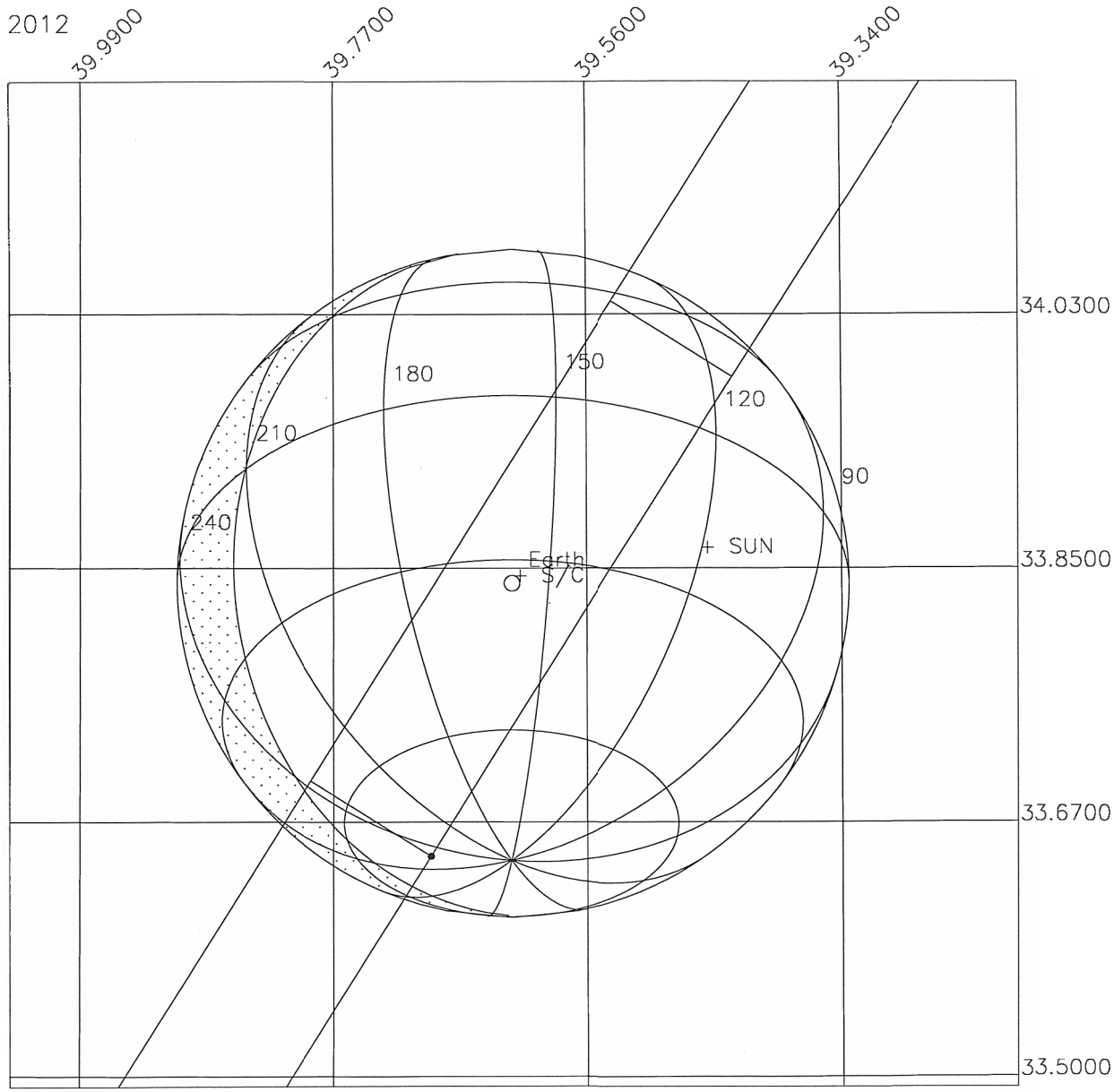

Start UTC_TIME : 1990-344 // 19:54:10.000
No End Time :
Start SCLK : 1/00613023:71:0:6

Target Body : EARTH
Target Ra/Dec : 39.62/ 33.84 Deg
S/C to Body Center : 1547199. Km (242.57841 Re)
Z-axis Pointing (Ra / Dec) : 175.28 / 2.58 Deg

GALILEO ORBIT ACTIVITY PLAN (OAP)
07/17/1990 13:35

ACTIVITY ID: E1HUSYSCN-02
START TIME: 90-346/06:00:00

Activity ID:	ORBIT E1 TARGET H OAPEL USYSCN MULTI - SEQ NO 02
Title	UV EARTH-MOON SYSTEM SCAN
Requestor	S. EDBERG
Working Group	MWG Bottom Label Plot Key UVS1

UTC TIMING BLOCK

	(YY-DDD/HH:MM:SS)
Start Time	90-346/06:00:00
End Time	90-346/15:18:00
Duration	000/09:18:00

AACS/DMS/DOWNLINK

Instruments Used:	DDS	N	EPD	N	HIC	N	MAG	N	NIMS	N	PLS	N	
	PPR	N	PWS	N	RS	N	SSI	Y	UVS	Y	EUV	N	
Scan Platform Reserved		Y	Earth Referenced					N					
Spin Status (All/Dual)		D	Coop Imaging Required					Y	DMS Activity				
Data Format/RT Downlink		28.8											

OBSERVATION OBJECTIVE

TO MEASURE UV INTENSITY OF EARTH-MOON SYSTEM. CANTED RECTANGULARGRID (WITH RESPECT TO CONE/CLOCK SPACE) REPEATED TWICE CENTERED NEAR EARTH AND MOON AND SET UP TO SWEEP EARTH AND MOON WITHOUT BOTH APPEARING IN THE SLIT AT THE SAME TIME. MAP IN LYMAN ALPHA AND OI(1304A) IN G-CHANNEL AND OH(3084A) IN F-CHANNEL. EACH RECTANGLE IS 252 RIMS IN G-CHANNEL AND 252 RIMS IN F-CHANNEL WITH APPROXIMATELY 1 MINUTE FOR REPOSITIONING.

DESIGN DETAIL

CDS Byte Count Estimate 268

See faxed copy July 20.

INITRS	10 + 9 + 9 * 2 + 14 + 20	= 61
TARGET	10 + 26	= 36
CSMOS	10 + 14 + 13 * (3-1)	= 50
CMDRS	10 + 2 * 14	= 38
SSI(2)	2 * (10 + 5 + 1 + 1)	= 68
SCITLM	10 + 5	= 15
	TOTAL	268

CHANGE CONTROL

Version	2	Page	01 of 04
Submission date	07/08/1990	Change Date	07/17/1990
Figure attached (Y/N)	Y	Changed by	JAJELLO

Tue Jun 19 20:49:00 2012

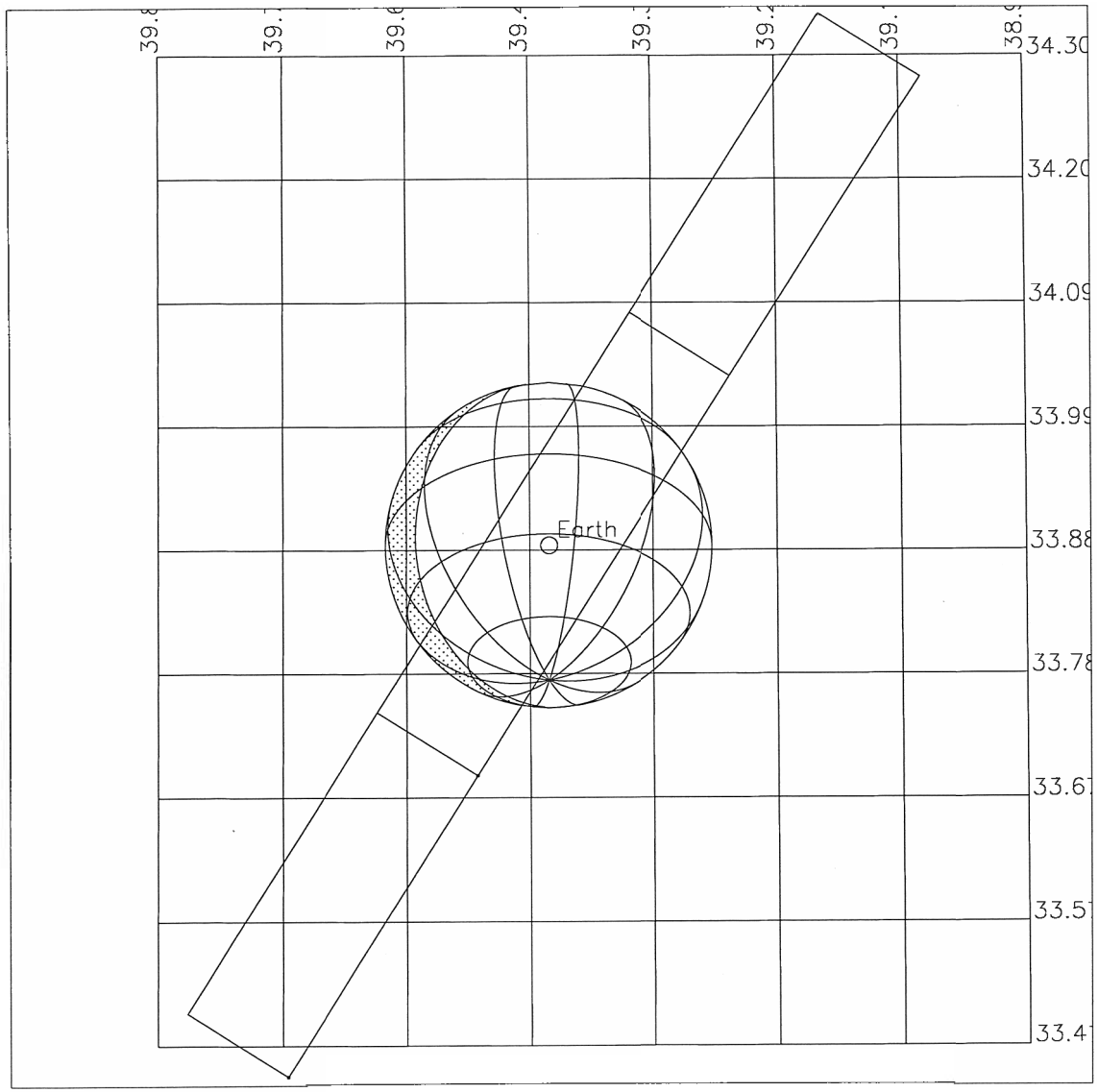

Start UTC_TIME : 1990-346 // 06:00:00.000
No End Time :
Start SCLK : 1/00615047:12:2:0

Target Body : EARTH
Target Ra/Dec : 39.47/ 33.89 Deg
S/C to Body Center : 2648870. Km (415.30439 Re)
Z-axis Pointing (Ra / Dec) : 175.28 / 2.58 Deg

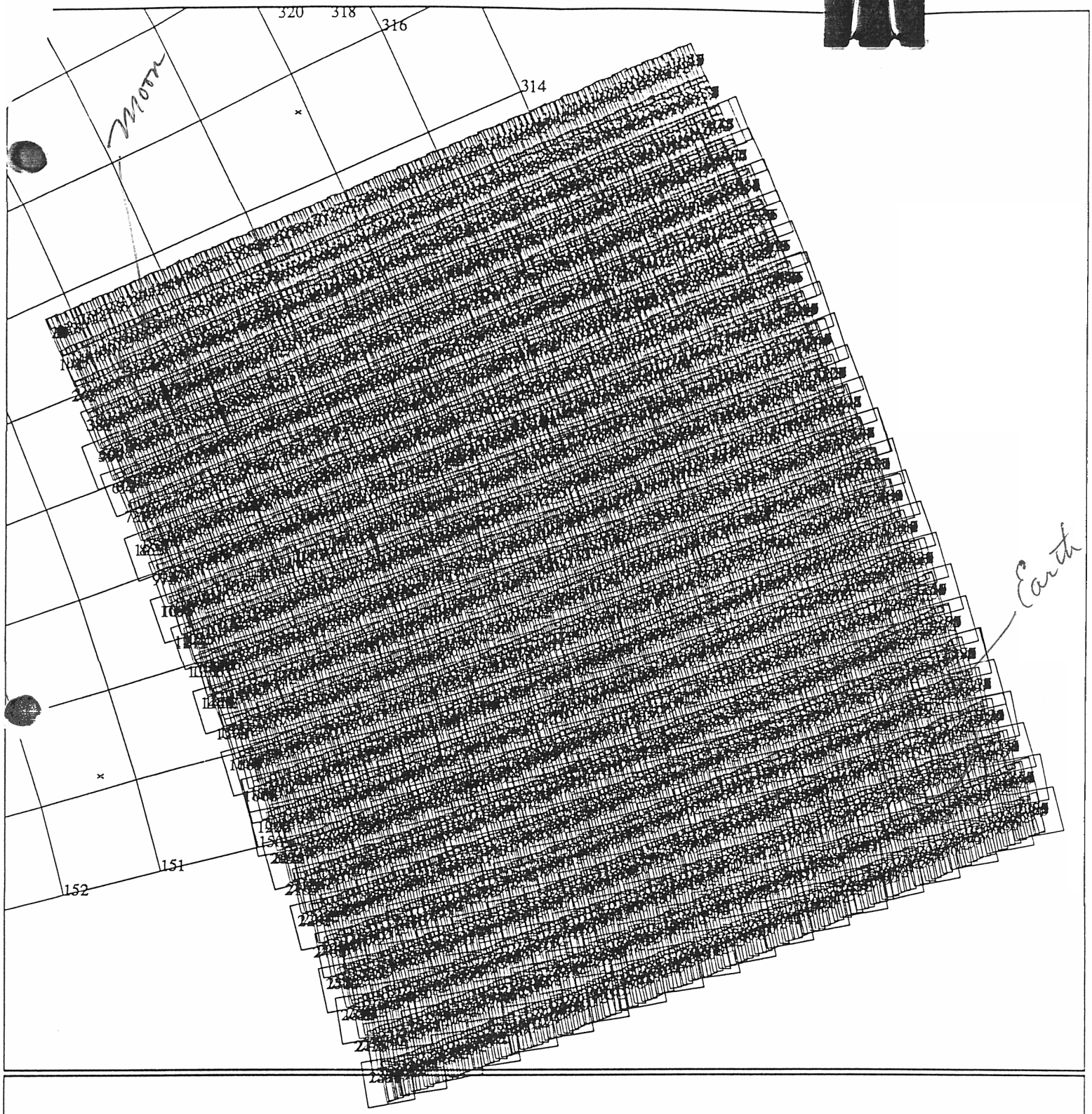

POINTER C3.1 paddy: 9/26/1990 14:52:38

P2.E1HUSYSCAN02

ISDF:isdf-ve11-pa1

CENTRAL BODY:EARTH

.I:m.e1husyscan02

EPHE:/gptr/eph/EARTH-070590.t

PERIAPSIS:90-342/20:35:31.21

THDR:EEE 90-342/20:34:11.000 +CDS 3283:00:0

ACTIVITY:E1HUSYSCAN02

FIGURE 11

GALILEO ORBIT ACTIVITY PLAN (OAP)
07/18/1990 11:42

ACTIVITY ID: E1LUATMOS-02
START TIME: 90-346/15:34:10

Activity ID:	ORBIT E1 TARGET L OAPEL UATMOS MULTI - SEQ NO 02
Title	UVS LUNAR ATMOSPHERE OBSERVATION
Requestor	LTAMPPARI
Working Group	AWG Bottom Label Plot Key UVS1

UTC TIMING BLOCK

	(YY-DDD/HH:MM:SS)
Start Time	90-346/15:34:10
End Time	90-346/20:34:10
Duration	000/05:00:00

AACS/DMS/DOWNLINK

Instruments Used:	DDS	N	EPD	N	HIC	N	MAG	N	NIMS	N	PLS	N	
	PPR	N	PWS	N	RS	N	SSI	N	UVS	Y	EUV	N	
Scan Platform Reserved		Y	Earth Referenced					N					
Spin Status (All/Dual)		D	Coop Imaging Required						N		DMS Activity		NONE
Data Format/RT Downlink		28.8											

OBSERVATION OBJECTIVE

The UVS slit will be moved via a slow cone slew from 1.0 deg on one side of the moon to -1.0 deg on the other side and then back again. In other words the UVS slit will be rastered in a box mode once for the G-Channel and once AGAIN for the G-channel. Slow slew rates of about 2 deg/1hour(~.010mr/s) will be used. This will allow UVS to integrate for long periods in any 0.1 deg slit width interval (3minutes). The UVS will search for the following possible atmospheric constituents, H, O, OH, and MgII. Predicted candidate wavelengths for miniscans - G: HI(1215.7), OI (1303.5) - ~~F: S(1809), MgI (2852), OH (3084). The F-channel measurement is a 2-position 32-step scan and the G-channel measurement is a 3-position 16-step scan.~~ THE CURRENT THINKING IS THAT THE LATMOS #2 IS DONE IN G-CHANNEL MINISCAN ONLY FOR THE TWO SETS OF SCANS. The ASD of the moon is <0.1 deg for EEE + 1 day. The UVS would like SSI support imaging during the F and G channel moon crossings.

DESIGN DETAIL

CDS Byte Count Estimate 252

July 16. This one will be all G, G scans

Commands are needed.
Observation:

time(MIN)	PA	Comment
4	target 26	set up slew
4	csmos 14	box mode (2scans)-up slew
75		down slew
150		up slew
225		down slew

3	cmdrs 42	set up commanding
4		G-channel
150		F-channel
298		UVS cruise mode

SUPPPORT IMAGING

? & ?	SSI PA 34	SHUTTER AT BOTH F & G MOON CROSSING
	INITRS 61	
	SCITLM 15	

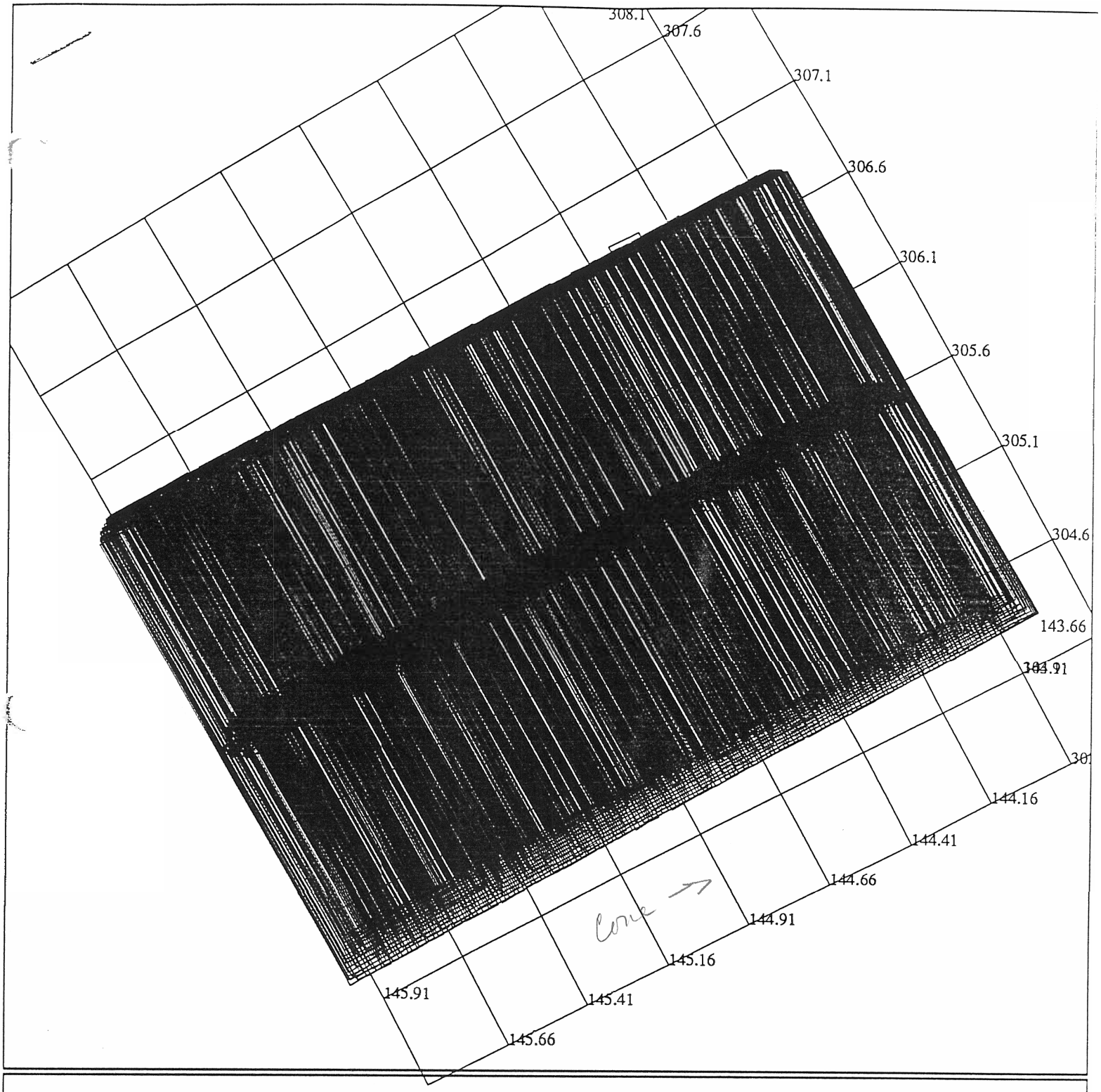

Moon A.S.D ≈ < 0.05°

POINTER C3.1 paddy: 9/26/1990 15:53:16

P2.E1LULATMOS0 2

ISDF:isdf-ve11-pa1

CENTRAL BODY: MOON

[illegible]l:m.e1lulatmos02

EPHE:/gptr/eph/EARTH-070590.t

PERIAPSIS:90-342/20:35:31.21

THDR:EEE 90-342/20:34:11.000 +CDS 5400:00:0

ACTIVITY:E1LULATMOS02

FIGURE 12

Wed Jun 20 20:55:24 2012

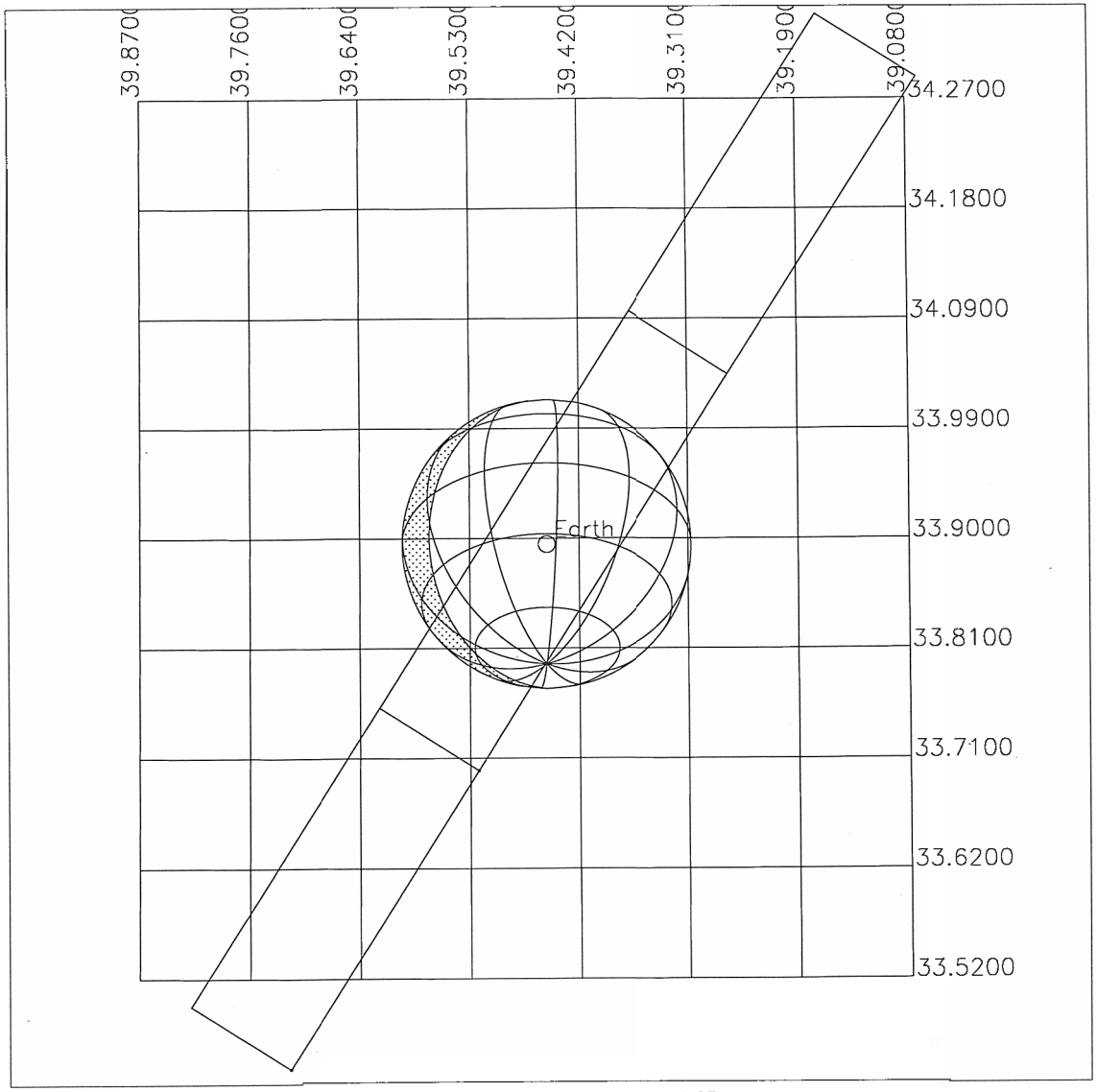

Start UTC_TIME : 1990-346 // 15:34:10.000
No End Time :
Start SCLK : 1/00615614:90:2:3

Target Body : EARTH
Target Ra/Dec : 39.45/ 33.89 Deg
S/C to Body Center : 2958048. Km (463.77910 Re)
Z-axis Pointing (Ra / Dec) : 175.28 / 2.58 Deg

GALILEO ORBIT ACTIVITY PLAN (OAP)
07/09/1990 19:27

ACTIVITY ID: E1HUANTIA-03
START TIME: 90-347/19:25:00

Activity ID:	ORBIT E1 TARGET H OAPEL UANTIA MULTI - SEQ NO 03
Title	UVS ANTISUN MAP-ALLSPIN
Requestor	JAJELLO
Working Group	MWG Bottom Label ANTISUN Plot Key UVS1

UTC TIMING BLOCK

	(YY-DDD/HH:MM:SS)
Start Time	90-347/19:25:00
End Time	90-347/23:55:00
Duration	000/04:30:00

OK

AACS/DMS/DOWNLINK

Instruments Used:	DDS	N	EPD	N	HIC	N	MAG	N	NIMS	N	PLS	N	
	PPR	N	PWS	N	RS	N	SSI	N	UVS	Y	EUV	N	

Scan Platform Reserved Y Earth Referenced N
Spin Status (All/Dual) A Coop Imaging Required N DMS Activity NONE
Data Format/RT Downlink 28.8

OBSERVATION OBJECTIVE

TO MEASURE INTERPLANETARY LYMAN ALPHA GRID POINTS WITH 10 DEGREE RESOLUTION OVER ENTIRE ANTI SUN HEMISPHERE. THE UVS WILL BE COMMANDED TO LYMAN-ALPHA MINISCAN MODE FOR ALL eleven CONE ANGLES equidistantly spaced from 80 to 170 degrees cone anlge. The OBJECTIVE is TO MAP ANTI SUN H LYMAN -ALPHA intensity distribution FROM INTERSTELLAR WINDhydrogen fluoescence. FOR S/N =33 (3% STATISTICS) THE ANGULAR RESOLUTION IN THE SKY IS 10 DEGREES IN CLOCK AND CONE.

DESIGN DETAIL

CDS Byte Count Estimate 626

See seq. no. 1

These values deviate from March 20 listing showing seq. #1

TIME (RIMS)	PA	DESCRIPTION
10	PCINIT 74	PUT SPACECRAFT IN ALLSPIN MODE-UVS SAFE
18	ALSPINSP	SET UP FOR ALL SPIN SLEWS
19 – slew starts at RIMS 19		CONE =170,CLOCK=180
43		CONE=160,CLOCK=180
67		CONE=150,CLOCK=180
91		CONE=140,CLOCK=180
115		CONE=130,CLOCK=180
139		CONE=120,CLOCK=180
163		CONE=110,CLOCK=180
187		CONE=100,CLOCK=180
211		CONE=90,CLOCK=180

dif from #4

SSI does something in all Spin + then do PCREST

235	PCREST 40	CONE=80,CLOCK=180
270		RETURN TO DUAL SPIN MODE (SSI OAPEL)
17	CMDRS 28	set up UVS
21	UVS TO LYMAN-ALPHA MINISCAN ✓	
260		UVS TO CRUISE ✓

note: will this cut 1st pointing (shorter time) then rest?

CHANGE CONTROL

Version	2	Page	01 of 04
Submission date	03/12/1990	Change Date	07/09/1990
Figure attached (Y/N)	N	Changed by	JAJELLO

E1-ANTISUN.aacs...RA vs DEC 1990-347

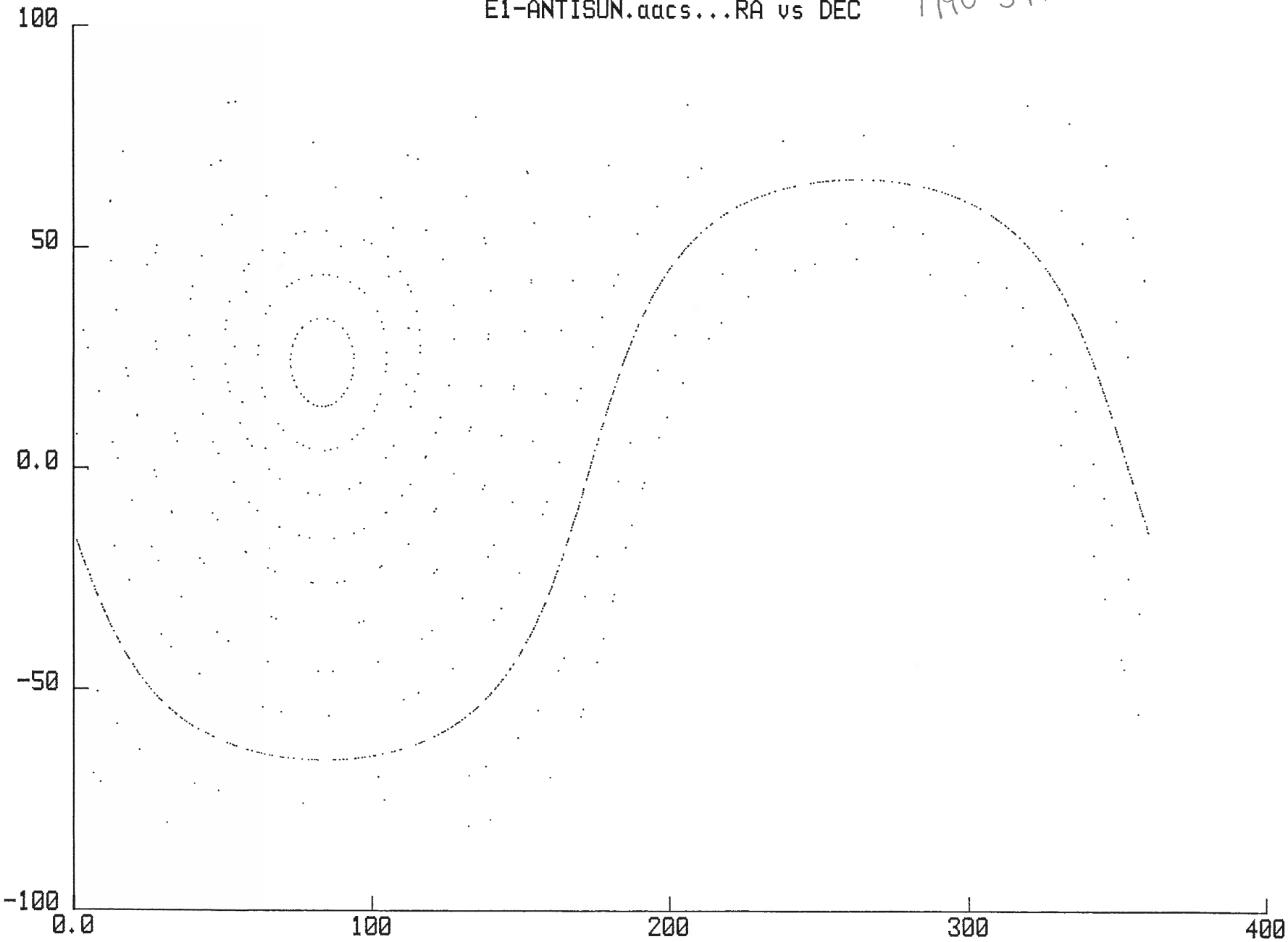

GALILEO ORBIT ACTIVITY PLAN (OAP) ACTIVITY ID: E1HUANTIA-04
07/18/1990 11:49 START TIME: 90-348/17:00:00

Activity ID: ORBIT E1 TARGET H OAPEL UANTIA MULTI - SEQ NO 04
Title UVS ANTISUN MAP-ALLSPIN
Requestor JAJELLO
Working Group MWG Bottom Label ANTISUN Plot Key UVS1

UTC TIMING BLOCK

(YY-DDD/HH:MM:SS)
Start Time 90-348/17:00:00
End Time 90-348/21:30:00
Duration 000/04:30:00

AACS/DMS/DOWNLINK

Instruments Used: DDS N EPD N HIC N MAG N NIMS N PLS N
PPR N PWS N RS N SSI N UVS Y EUV N
Scan Platform Reserved Y Earth Referenced N
Spin Status (All/Dual) A Coop Imaging Required N DMS Activity NONE
Data Format/RT Downlink 28.8

OBSERVATION OBJECTIVE

TO MEASURE INTERPLANETARY LYMAN ALPHA GRID POINTS WITH 10 DEGREE RESOLUTION OVER ENTIRE ANTI SUN HEMISPHERE. THE UVS WILL BE COMMANDED TO LYMAN-ALPHA MINISCAN MODE FOR ALL eleven CONE ANGLES equidistantly spaced from 80 to 170 degrees cone anlge. The OBJECTIVE is TO MAP ANTI SUN H LYMAN -ALPHA intensity distribution FROM INTERSTELLAR WINDhydrogen fluoescence. FOR S/N =33 (3% STATISTICS) THE ANGULAR RESOLUTION IN THE SKY IS 10 DEGREES IN CLOCK AND CONE.

DESIGN DETAIL

CDS Byte Count Estimate 592

?

See seq. no. 1

TIME (RIMS)	PA	DESCRIPTION
10	PCINIT 74	PUT SPACECRAFT IN ALLSPIN MODE-UVS SAFE
18	ALSPINSP	SET UP FOR ALL SPIN SLEWS
19		CONE =170,CLOCK=180
41		CONE=160,CLOCK=180
63		CONE=150,CLOCK=180
85		CONE=140,CLOCK=180
107		CONE=130,CLOCK=180
129		CONE=120,CLOCK=180
151		CONE=110,CLOCK=180
173		CONE=100,CLOCK=180
195		CONE=90,CLOCK=180

dif from #3

```
217                    CONE=80,CLOCK=180
260  PCREST 40       RETURN TO DUAL SPIN MODE
 17      CMDRS 28             set up UVS
 21      UVS TO LYMAN-ALPHA MINISCAN
255                UVS TO CRUISE
```

CHANGE CONTROL

Version	4	Page	01 of 04
Submission date	07/09/1990	Change Date	07/18/1990
Figure attached (Y/N)	N	Changed by	JAJELLO