Atmospheric Imaging Assembly Investigation Overview

Alan Title

AIA PI

Stanford/Lockheed Institute for Space Research

LM Advanced Technology Center

title@lmsal.com

Contents of This Presentation

- Quick Overview of the SDO Mission
- The AIA Program
- AIA within the Living With a Star program
- Science themes of the AIA investigation
- Implementing the science investigation
- Managing the science data

SDO Mission Summary

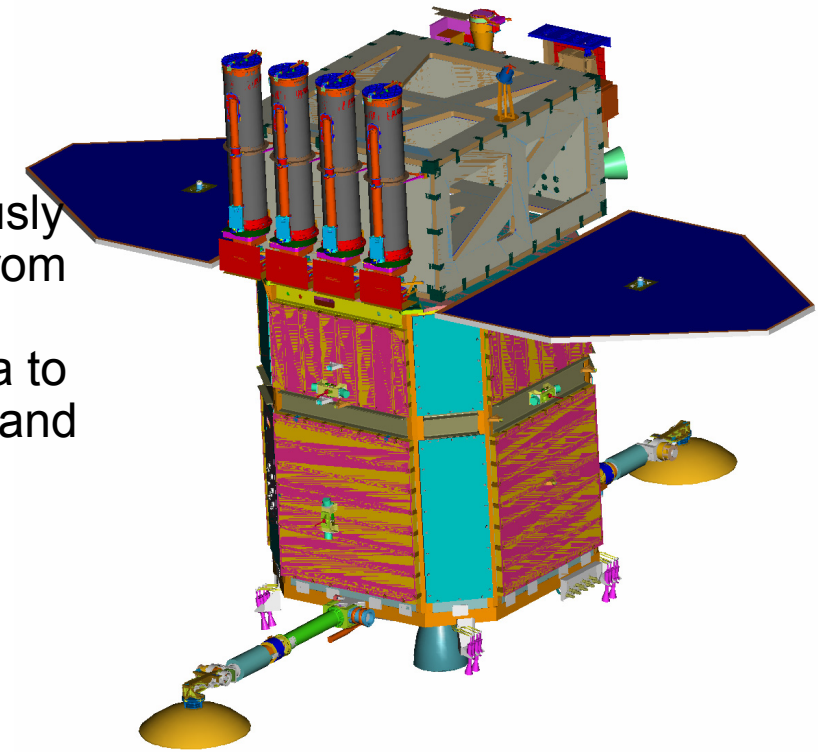

Objective:	SDO spacecraft carries a suite of solar observing instruments that continuously downlinks real time data from the Sun. The SDO ground system distributes the data to PI run science operations and analysis centers
Launch Date:	April 2008
Mission Duration:	5 years, 10 years of expendables
Orbit:	36,000km Circular, 28.5º Geo Synch Inclined
Launch Vehicle:	Delta IV or Atlas V
Launch Site:	KSC
GS Sites:	SDO Dedicated
Supporting Sites:	South Africa, Australia, Hawaii, Chile

Orbit Overview

- The SDO geosynchronous orbit will result in two eclipse seasons with a variable daily eclipse each day
  - The two eclipse seasons will occur twice a year due to the effects of the orbit geometry and the earth-sun position
  - During each eclipse season, SDO will move through the earth's shadow- this shadow period will grow to a maximum of ~72 minutes per day, then subside accordingly as the earth-sun geometry moves out of the SDO eclipse season
  - Eclipse season effects:
    - Instrument
      - Interruption to SDO science collection
      - Thermal impacts to instrument optical system due to eclipse
    - Power
      - Temporary reduction or loss of power from solar arrays
      - Battery sizing includes eclipse impact
    - Thermal
      - S/C thermal design considerations due to bi-annual eclipses

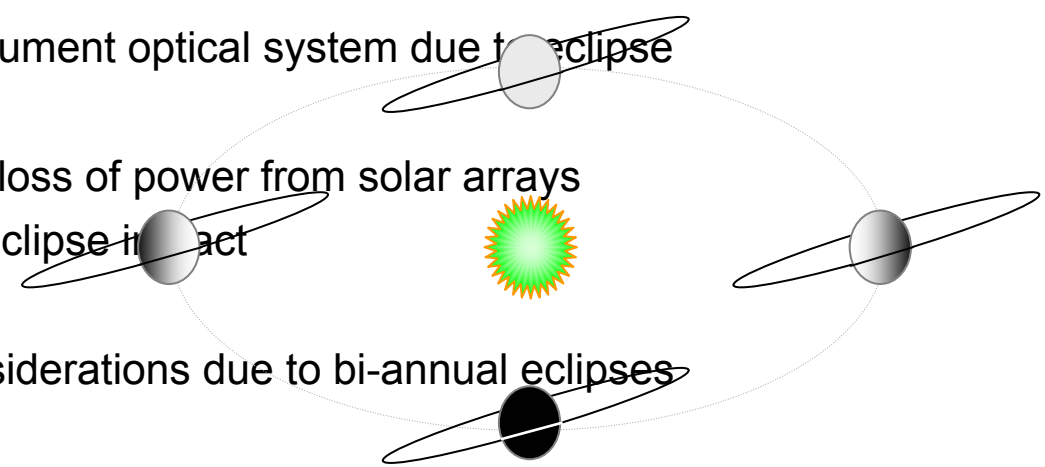

Observatory Design

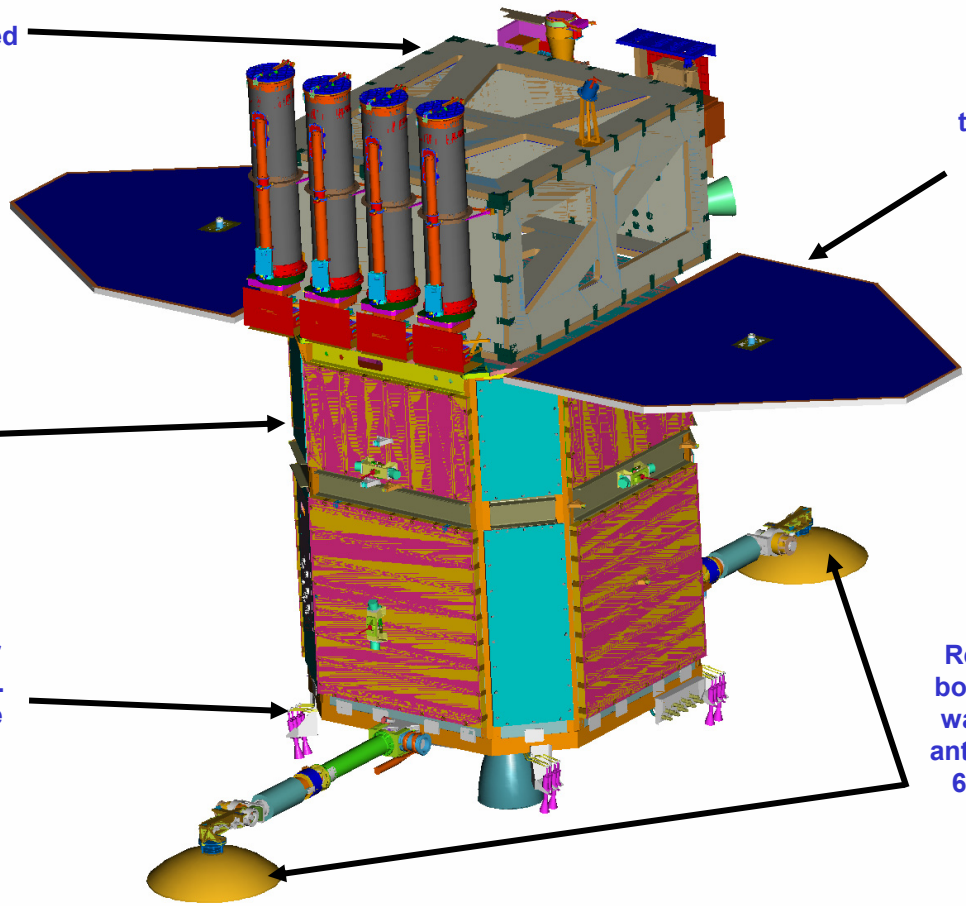

- Modular, distributed electrical architecture similar to MAP/EO-1
  - -Uses Subsystem Services Nodes (SSN) as common-design building blocks to provide distributed processing, power regulation, & power switching functionality
  - - Nodal architecture simplifies interfaces between subsystems and between spacecraft and instruments
- Five-year mission life suggests single-fault tolerant design will be used to the greatest extent possible, as limited by technical and programmatic resources

AIA Program Overview & Future

- AIA Program began on 7 November 2003
  - Quickly confirmed original approaches: science, instrument, and organizations
  - Augmented HMI team to form LMSAL AIA & HMI & Joint teams
  - Got program off and rolling at SAO – major partner/subcontractor and time critical
- Interface Working Meetings with Project took place immediately
  - November, January, February
  - No problems with accommodating AIA onto the S/C; just needs routine work
- Conducted PDR-1 on 4 March
  - Requirements, early design, S/C interfaces and accommodations
- Participated in Mission PDR on 9-12 March
- PDR-2 on 14-15 April
  - Preliminary Design classical review
- Program moving rapidly and successfully
  - Enormous leverage from HMI
  - Extensive heritage from TRACE
  - Excellent established working relationships with SDO GSFC Project

AIA will be in-step by Confirmation Review

LMSAL SDO Organization

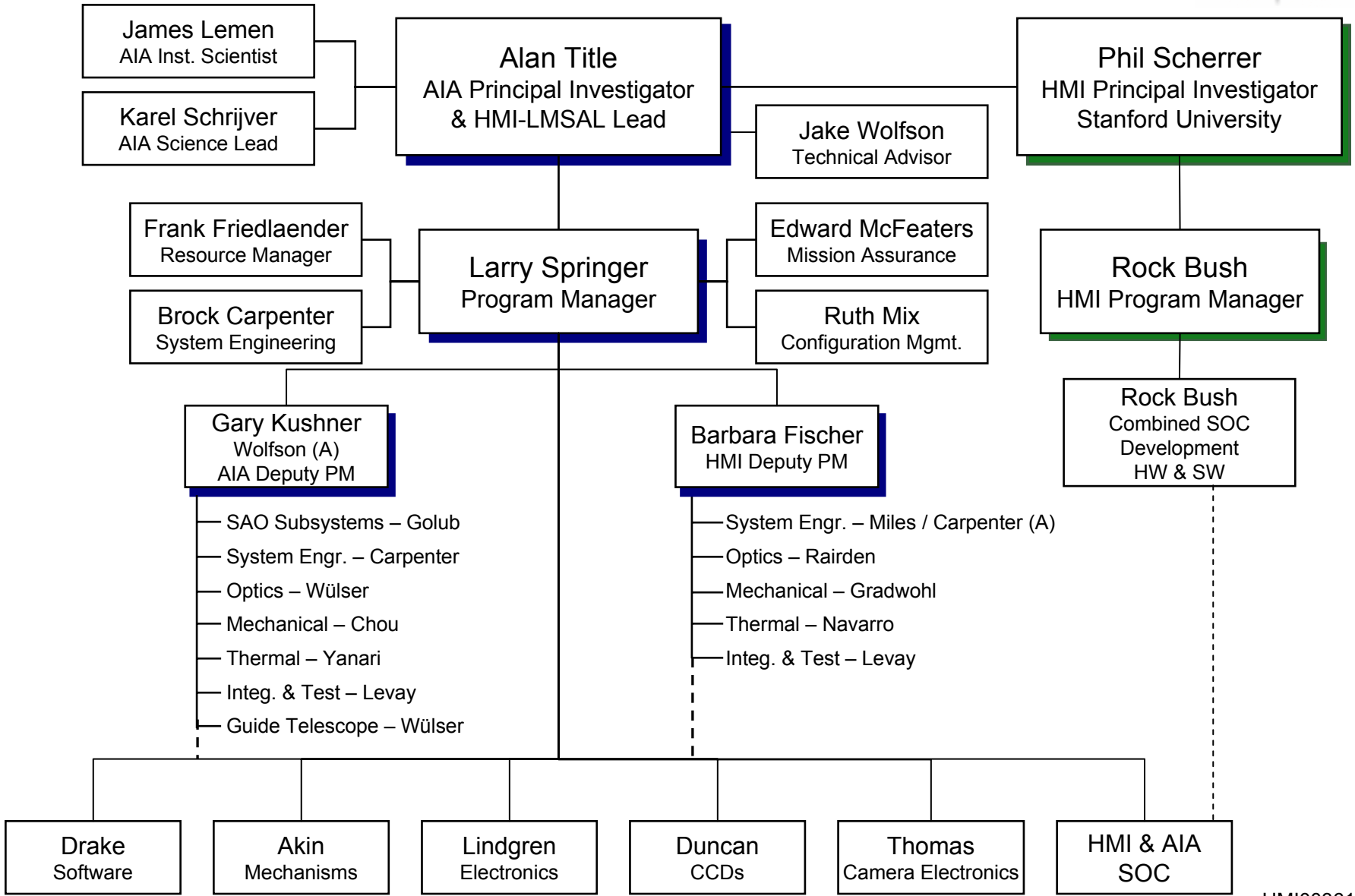

LMSAL SDO Organizational Features

- Single LMSAL SDO Program Manager
  - Co-ordinates efforts of AIA and HMI
  - Co-ordinates with Lead Engineers for common program elements
  - AIA builds on the HMI systems already in place
    - Electronics and software are the prime instrumental examples
    - Mission Assurance & Risk Management functions are the prime programmatic examples.
- Dedicated Deputy Program Mangers for AIA and HMI
  - Strong advocates of their programs
  - Treat the common elements groups almost like vendors
- Dedicated Systems Engineers for AIA and HMI
- Much of the AIA efforts for mission operations, data analysis, and EPO will be conducted by Stanford University as an extension to those efforts already in place for HMI.
- The Smithsonian Astrophysical Observatory has a major role in the AIA program.

AIA is a key component to understanding the Sun and how it drives space weather

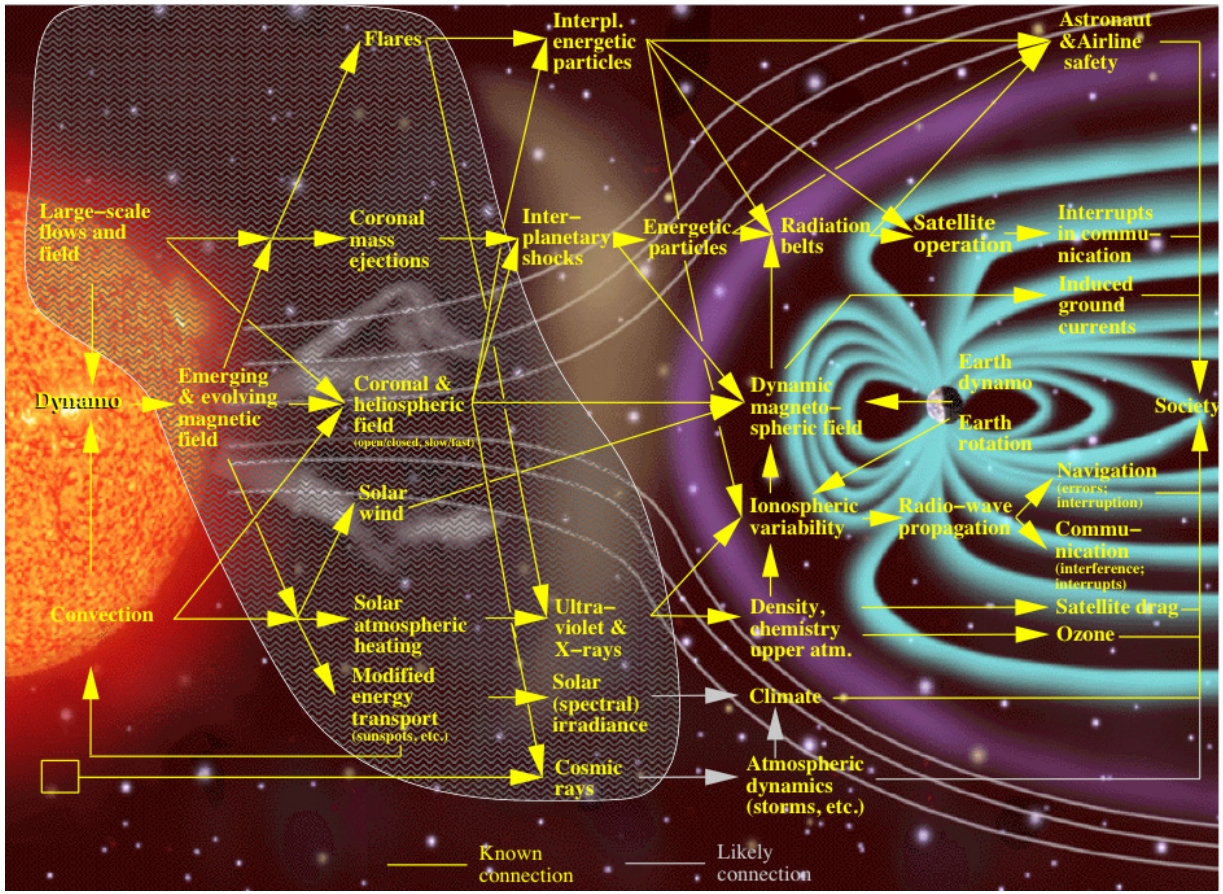

- AIA images the solar outer atmosphere: its science domain is shaded
- HMI measures the surface magnetic fields and the flows that distribute it
- EVE provides the variation of the spectral irradiance in the (E)UV

Themes of the AIA Investigation

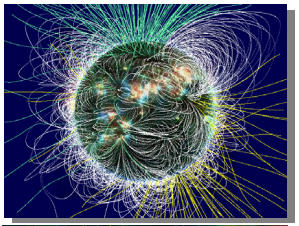

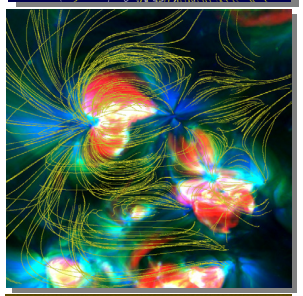

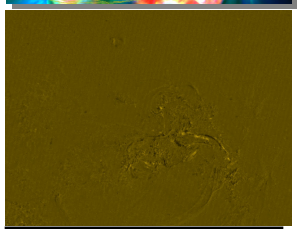

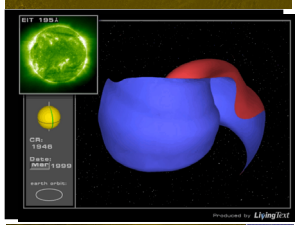

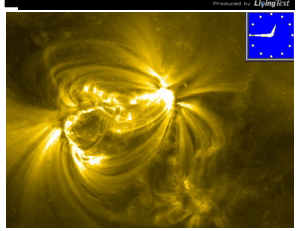

1. ***Energy input, storage, and release:*** the 3-D dynamic coronal structure
   - 3D configuration of the solar corona; mapping magnetic free energy; evolution of the corona towards unstable configurations; the life-cycle of atmospheric field
2. ***Coronal heating and irradiance:*** thermal structure and emission
   - Contributions to solar (E)UV irradiance by types of features; physical properties of irradiance-modulating features; physical models of the irradiance-modulating features; physics-based predictive capability for the spectral irradiance
3. ***Transients:*** sources of radiation and energetic particles
   - Unstable field configurations and initiation of transients; evolution of transients; early evolution of CME's; particle acceleration
4. ***Connections to geospace:*** material and magnetic field output of the Sun
   - Dynamic coupling of the corona and heliosphere; solar wind energetics; propagation of CME's and related phenomena; vector field and velocity
5. ***Coronal seismology:*** a new diagnostic to access coronal physics
   - Evolution, propagation, and decay of transverse and longitudinal waves; probing coronal physics with waves; the role of magnetic topology in wave phenomena

The needs of each of these themes determines the science requirements on the instrument and investigation.

Energy input, storage, and release

Main tasks	Specific Goals	Technical approach	Science data requirements	Co-I team	Required resources
1: Energy input, storage, and release					
1A: 3D configurations of the solar corona	End-to-end connectivity; twist, writhe, and braids; field strength along field; global and local separators	Temperature Maps; stereoscopy; flow vectors	Full EUV sets, $<$ 1/min. cadence or better if fast flows are studied, continuous over up to 3 few days	Brosius, Demoulin, Keller, Metcalf, Priest, Title	Core: DEM inversions; global surface field model; field extrapolations; image-to-model fitting. External: loop modeling; topology models; stereoscopic techniques
1B: Mapping magnetic free energy	Free energy in active-region emergence; free energy build up by photospheric stressing motions; role of reconnection; scale couplings	Potential-field model; field-deformation model; MHD models	Sequences of vectormagnetograms and EUV and Hα images at $\sim$ 1 hr cadence	Van Ballegooijen, Demoulin, Gary, Hurlburt, Keller, Kosovichev, Martens, Mikic, Metcalf	Data: Hα images. Core: force-free field model; global surface field model; visualization tools. External: non-force-free field modeling, including MHD models.
1C: Evolution of the corona towards unstable configurations	conditions for reconnection; dissipation of stresses and currents at a range of scales; balancing stress and relaxation; helicity evolution	connectivity studies; free-energy evolution	long-term continuous obs.at all coronal temperatures, & surface flows and fields	van Ballegooijen, Hurlburt, Kosovichev, Martens, Mikic, Priest, Weiss	As under 1A&B, plus: External: MHD or magneto-frictional models.
1D: The life-cycle of atmospheric field	Retraction and expulsion of flux from the corona; latitude-dependence of flux subduction	Field-connectivity evolution	10 s cadence at all coronal EUV wavelengths; HMI (vector)magnetograms at least every few minutes; Hα observations	Hurlburt, Martens, Mikic, Title	As under 1B. Data: Hα

Coronal heating and irradiance

Main tasks	Specific Goals	Technical approach	Science data requirements	Co-I team	Required resources
2: Coronal heating and irradiance					
2A: Contributions to solar (E)UV irradiance by types of features	quantify contributions to spectral irradiance change from a variety of features (ARs, ephemeral regions, flares, quiet network, …)	AIA/EVE comparisons; determine contributions for different solar regions and feature populations; isolate contributions by rotation tracking	calibrated EUV data (full-disk images and full-disk irradiance) at all coronal temperatures; 10 s cadence during flares, slower allowed otherwise	De Pontieu, Martens, Schrijver, Shine, Warren	Data: precise knowledge of AIA spectral response and other instrumental properties. Core: feature recognition and tracking
2B: Physical properties of irradiance-modulating features	thermal distribution of coronal plasma; properties of coronal heating, and dependence of field and its topology	Core: DEM analysis to estimate full spectral irradiance; detailed variability studies and distribution functions; coronal heating properties; loop and field modeling	full-resolution, full-disk EUV images and HMI vector-magnetograms at at most 60 s cadence	Brosius, De Pontieu, Fludra, Golub, Gurman, Hassler, Lemen, Martens, Nordlund, Schrijver, Shine, Warren	DEM inversion code; loop identification; field modeling and visualization
2C: Physical models of the irradiance-modulating features	dynamics of loop atmospheres in response to heating changes	MHD modeling of loop atmospheres; comprehensive forward modeling of (sections of) solar corona		Brosius, De Pontieu, Fludra, Golub, Gurman, Hassler, Lemen, Martens, Nordlund, Schrijver, Shine, Warren	External: loop models, MHD and other field-modeling codes
2D: Physics-based predictive capability for the spectral irradiance	predict spectral irradiance	forward model of full coronal emission, comparison with AIA and EVE data, iterative improvement by validation of results	see 2B,C	Brosius, De Pontieu, Fludra, Golub, Gurman (coronal physics), D. Hassler, Lemen, Martens, Nordlund, Schrijver, Shine, Warren	Core: coronal rendering, force-free field model. External: coronal heating model

Transients

Main tasks	Specific Goals	Technical approach	Science data requirements	Co-I team	Required resources
3: Transients					
3A: Unstable field configurations and initiation of transients	identification of the instability that directly leads to transients; locating the instability; locating reconnection with respect to separatrices and separators; computation of helicity	Thermal maps; correlation tracking; field extrapolation; separator models; helicity injection models, reconnection theory	Full EUV sets, full-disk vector magnetograms; high-cadence subregion image sequences.	Demoulin, Gary, Keller, Kosovichev, Metcalf, Priest, van Ballegooijen	External: techniques to compute helicity injection and field topology
3B: Evolution of transients	Rapid changes of field; dynamic connectivity; location and rate of reconnection; relation between impulsive and gradual phase energy release; high-energy activity in the post-eruption phase; implications of motions (e.g., down flows)	Thermal maps; connectivity studies; flare-ribbon tracing; field extrapolation	Full EUV sets; UV images at high cadence; high-cadence subregion image sequences	DeLuca, Fludra, McKenzie, Nitta, Tarbell, Warren	Data: radio observations for particle acceleration in the gradual phase
3C: Early evolution of CMEs	computation of Lorentz forces involved; characterization of adjacent and overlying field; CME speed profiles; fully open-up vs failed ejections; origin of B_z	Thermal maps, CME models, field extrapolation, tracing filaments	Magnetograms, Full EUV sets, high temporal and spatial H-α images	Demoulin, Fuselier, Golub, Harrison, Martens, Metcalf, Mikic, Nitta	Data: coronagraph data (LASCO, STEREO, Mauna Loa). External: various CME models, different techniques for computing helicity injection
3D: Particle acceleration	relation between downward and upward moving particles; computation of electric field; identification of flare and CME shocks; geometrical relation between shock front and magnetic field; waves resonant with particular ions	Thermal maps; difference images, dispersion relation from in-situ SEP data, potential field model	Full EUV sets, fast cadence UV images (proxies for precipitating electrons), high temporal and spatial Hα images (both on- and off-band)	Harra, Keller, McKenzie, Metcalf, Nitta, Shine	Data: in-situ SEP data from ACE (ULEIS/SIS) and STEREO (IMPACT), metric and DH dynamic spectra (groundbased and STEREO/SWAVE)

Connection to geospace

Main tasks	Specific Goals	Technical approach	Science data requirements	Co-I team	Required resources
4: Connections to geospace					
4A: Dynamic coupling of corona and heliosphere	interface between corona and heliosphere; geometry of open and closed fields, and its evolution	compare high S/N observations to force-free or PFSS models of the coronal field	observations at all AIA EUV wavelengths; coronagraphic image sequences	Fuselier, Hurlburt, Mikic, Scherrer, Schrijver	Core: force-free field models. External: MHD models of high corona & heliosphere.
4B: Solar wind energetics	what determines the acceleration of the solar wind; why is field geometry apparently important	compare field models and observed coronal-hole boundaries with wind-propagation model to in-situ sensors in the solar wind	As 4A; in-situ wind measurements, preferably at multiple locations in the heliosphere	Fuselier, Hurlburt, Mikic, Scherrer, Schrijver	As in 4A, plus: External: propagation model for wind and field throughout the heliosphere out to available in-situ sensors
4C: Propagation of CMEs and related phenomena	propagation of CMEs through background wind; determination of mass flows (outward and inward); energetics of field and plasma	model CME propagation using observed initial evolution	10 s cadence in all AIA EUV channels; coronagraphic observations	Fuselier, Mikic, Nitta, Scherrer	External: coronal MHD, and heliospheric MHD models.
4D: Vector field and velocity	initial evolution of the field associated with CMEs and filament eruptions	analyze high-cadence observations of field evolution during CMEs, combine with spectrographic observations whenever possible, combine with model computations	high-cadence observations of low corona, uninterrupted for hours at least to study the evolution of the writhing field; vector-field measurements	Fuselier, Mikic, Scherrer	External: MHD models of inner corona during eruptive processes

Coronal seismology

Main tasks	Specific Goals	Technical approach	Science data requirements	Co-I team	Required resources
5: Coronal seismology					
5A: Transverse waves: excitation, propagation and decay	wave excitation, propagation, decay	movie viewing to discover oscillations; measurement of properties; comparison to field and field topology and loop-atmosphere properties	10 s cadence full-disk movies at all coronal temperatures and UV/WL	De Pontieu, DeLuca, Priest, Hurlburt	Observer to inspect movies. Data: Solar-B/EIS coordination. Core: field models. External: coronal atmosphere models
5B: Longitudinal waves: excitation, propagation and decay	movie viewing to discover oscillations; measurement of properties; comparison to field and field topology and loop-atmosphere properties	wave excitation, propagation, decay	10 s cadence full-disk movies at all coronal temperatures and UV/WL	De Pontieu, DeLuca, Hassler, Kosovichev, Mikic, Metcalf, Tarbell	Observer to inspect movies. Data: Solar-B/EIS coordination. Core: field models. External: coronal atmosphere models
5C: Probing coronal physics with waves	use of dispersion relations, decay rates, etc., to quantify properties of coronal plasma and field	compare oscillation properties to field models and loop-atmosphere models	high-frequency, high S/N images at all temperatures	De Pontieu, DeLuca, Hassler, Priest	Core: field models, DEM profiles along loops. External: MHD simulations
5D: The role of magnetic topology in wave phenomena	why are transverse oscillations seen only near magnetic separators, what is the imaged counterpart of high-temperature oscillations	field models and topology analysis	see 5A,B	De Pontieu, DeLuca, Hassler, Schrijver, Metcalf, Keller	External: advanced loop and field modeling based on HMI data and plasma-physics simulations

Science Questions to Instrument Properties

The AIA instrument design and science investigation address all over-arching science questions (1…7) in the SDO Level-1 Requirements (August 2003)

1	What mechanisms drive the quasi-periodic 11-year cycle of solar activity?	**4**	Where do the observed variations in the Sun's total & spectral irradiance arise, how do they relate to the magnetic activity cycle?
2	How is active region magnetic flux synthesized, concentrated & dispersed across the solar surface?	**5**	What magnetic field configurations lead to CMEs, filament eruptions and flares which produce energetic particles and radiation?
3	How does magnetic reconnection on small scales reorganize the large-scale field topology and current systems? How significant is it in heating the corona and accelerating the solar wind?	**6**	Can the structure & dynamics of the solar wind near Earth be determined from the magnetic field configuration & atmospheric structure near the solar surface?
		7	When will activity occur and is it possible to make accurate and reliable forecasts of space weather and climate?

Requirement / Science theme		Spatial	Temporal		Thermal		Intensity	
		Field of View Δx= 1Mm	Δt	continuity	$\Delta \log T$	T coverage	Accu-racy	Dynamic Range
1) Energy Input Storage & Release *Dynamic Coronal Structure*	1 4 2 5 3 6 7	Full Corona 40'-46'	~10 s	Full Disk passage	~0.3	0.7-8 MK (full corona)	-	Large for simul-taneous obs. of faint & bright structures
2) Coronal Heating & Irradiance *Thermal Structure & Emission*	4 2 3 7	Active Regions	<1 min, a few sec in flares	Days	0.3 for DEM inv.	0.7-20 MK (full corona)	10%	>1000
3) Transients *Sources of Radiation & Energetic Particles*	4 2 5 3 7	Majority of Disk	A few sec in flares	At least days for buildup	~0.3 for T<5MK, ~0.6 for T>5MK	5000 K - 20 MK	-	>1000 in quiescent channels
4) Connections to Geospace *Material & Magnetic Field Output of the Sun*	4 5 6 7	Full Disk +off-limb	~10 s	Continuous observing	~0.3	5000 K - 20 MK	10% for thermal struct.	Large to study high coronal field
5) Coronal Seismology *Access to new physics*	4 3	Active Regions	As short as possible	Continuous for discovery	~0.5 to limit LOS confusion	multi-T obs. for thermal evolution	10% for density	>10

Thermal Coverage is Key to Coronal Physics

- 6 Fe-line EUV channels to recover the coronal thermal structure while avoiding the problem of different chemical compositions; 4 new channels to observe the warm and hot corona; all narrow band to optimize contrasts
- WL sharing low-T coronal optics for alignment with other instruments (HMI, …)
- UV to study waves and field going into the corona as well as particle beams and conducted thermal energy coming down; TRACE-like for continuity, with proven usefulness and technology
- He II 304Å to provide coverage of the chromosphere, to observe filaments, and as a key driver to chemistry of the Earth's outermost atmospheric

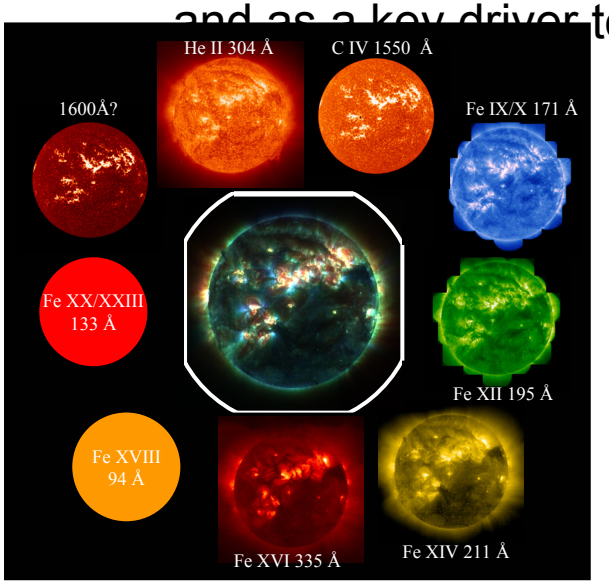

AIA wavelength bands

Channel	Δλ††	Ion(s)	Region of Atmosphere*	Char. log(*T*)
Visible	-	Continuum	Photosphere	3.7
1700Å	-	Continuum	Temperature minimum, photosphere	3.7
304Å	12.7	He II	Chromosphere, transition region,	4.7
1600Å	-	C IV+cont.	Transition region + upper photosphere	5.0
171Å	4.7	Fe IX	Quiet corona, upper transition region	5.8
193Å	6.0	Fe XII, XXIV	Corona and hot flare plasma	6.1, 7.3
211Å	7.0	Fe XIV	Active-region corona	6.3
335Å	16.5	Fe XVI	Active-region corona	6.4
94Å	0.9	Fe XVIII	Flaring regions	6.8
133Å	4.4	Fe XX, XXIII	Flaring regions	7.0, 7.2

***Absorption allows imaging of chromospheric material within the corona;**
††FWHM, in Å

AIA Design Characteristics

Implementation Requirement	Implementation
High Angular Resolution	**~0.6 arc second pixels**
Large Field of View (field & irradiance)	**full Sun + 2 pressure scale heights**
Large Dynamic Range	**> 1,000**
Complete Coronal Temperature Coverage	**~10^5–10^7 K in 6 EUV Fe-line channels**
	UV/WL and He II 304A imaging
Adequate photo-/chromospheric coverage	**~10 s baseline cadence, ~2 s fastest**
Time Resolution (dynamics & irradiance)	**brightness histogram feedback**
Dynamic Exposure Control	**continuous observations up to many weeks, spanning half a cycle**
Long-Term Coverage	**Adequate aperture, filters, detector system**

Exposure times below 3 s

Instrument Design Overview

- Four ST's - 8 Science Channels
  - 7 EUV Channels in a sequence of Fe line and He 304Å
  - A UV Channel with CTN, 1600Å, 1700Å filters
- Active secondaries for image stabilization
- Four GT's
- Four 4096 x 4096 thinned Back Illuminated CCD's
- 2.5 Second readout of Full CCD
- One Second Reconfigure of all Mechanisms
  - Filter Wheels
  - Sector Shutter
  - Focal Plane Shutters
- On-Board Data Compression via several Lookup Tables

AIA Normal and Special Operations

- Regular cadence of 10 s for 8 wavelengths for full-CCD readouts allows observations of most phenomena, guaranteed coverage, ease of analysis (timing studies), and standardized software, compatible with HMI observations and EVE science needs.

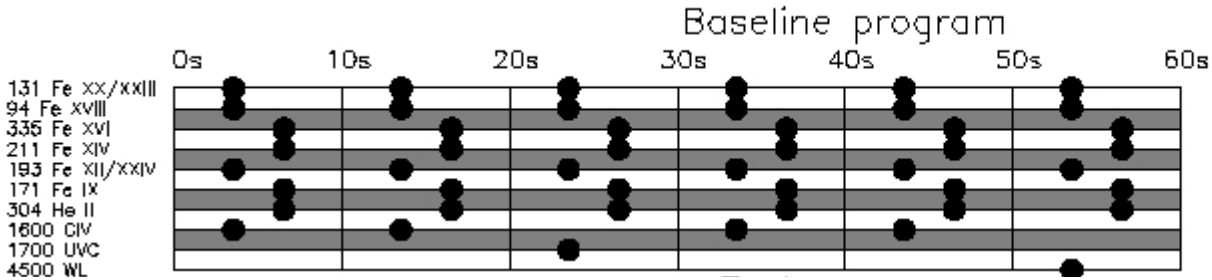

- **But fast reconnection, flares, eruptions, and high-frequency waves require higher cadence. Within telemetry constraints, partial readouts in a limited set of wavelengths embedded in a slowed baseline program, infrequently implemented, broaden discovery potential without adverse effects to LWS goals**

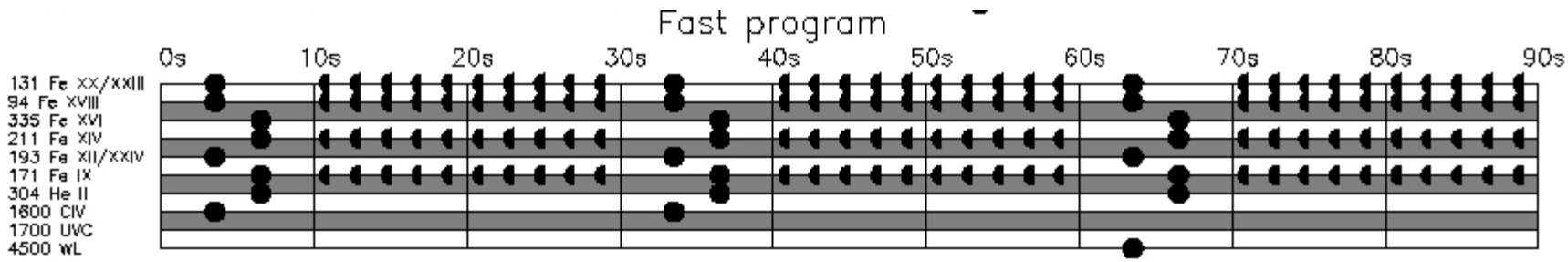

Science Coordination

- The AIA team will stimulate joint observing and analysis.
  - Coordinated observing increases the coverage of the global Sun-Earth system (e.g., STEREO, coronagraph, wind monitors, …), provides complementary observations for the solar field (e.g., vector field, Hα filament data) and its atmosphere (Solar-B/EIS spectral information). And it increases interest in analysis of AIA data.
  - The AIA team includes PI's and Co-I's from several other space and ground bas ths"):

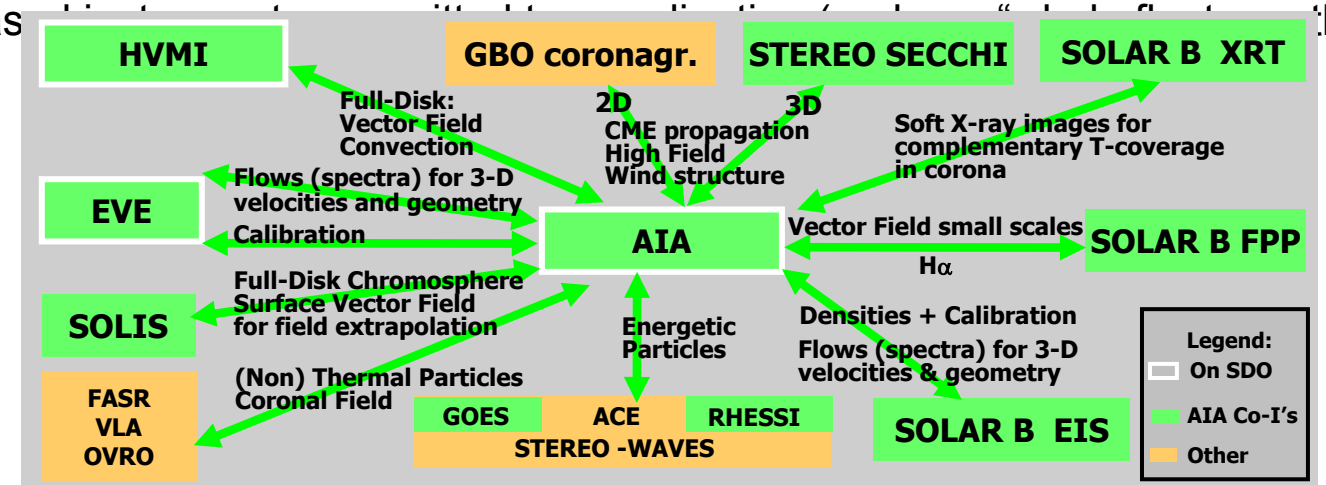

- EVE and HMI needs have been carefully taken into account in setting plate scale, field of view, cadence, and channel selections, and in science themes.

AIA System Requirements

Science questions determine the top level system properties.

1. **<u>Field of View (FOV) and Pixel Size</u>**
2. Spatial Resolution
3. Temperature Coverage
4. Cadence
5. Dynamic Range
6. Guide Telescope

The system properties flow down to the component properties.

1. Filters, coatings, and detector
2. Mechanisms
3. Image Stabilization System
4. Electronics and Software

Field of View and Pixel Size

- AIA atmospheric images shall cover a field of view of 41 arcmin (along detector axes - 46 arcmin along detector diagonal) with a sampling of 0.6 arc seconds per pixel
- AIA science themes 1, 3, and 5 require whole Sun viewing
  - These requirements drive telescope prescription and detector size
  - These requirements drive the required focal length and the required resulting telescope envelop length
  - Sampling of 0.6 arcsec requires a 4096 x 4096 pixel detector
  - Derived requirements flow to telescope design (for PSF or RMS spot size) and the detector MTF

FOV Requirement

- Field of View: require observations to at least a pressure scale height (=0.1 R_{solar} at Te=3 MK)
- AIA: 41 arcmin = 1.3 τ_P
  46 arcmin = 2.0 τ_P
  (see dashed lines)
- AIA will observe 96% of X-ra radiance (based on Yohkoh)
- AIA will observe nearly all (~98%) emission that will be in EVE's FOV

Yohkoh/SXT 8 May 1992

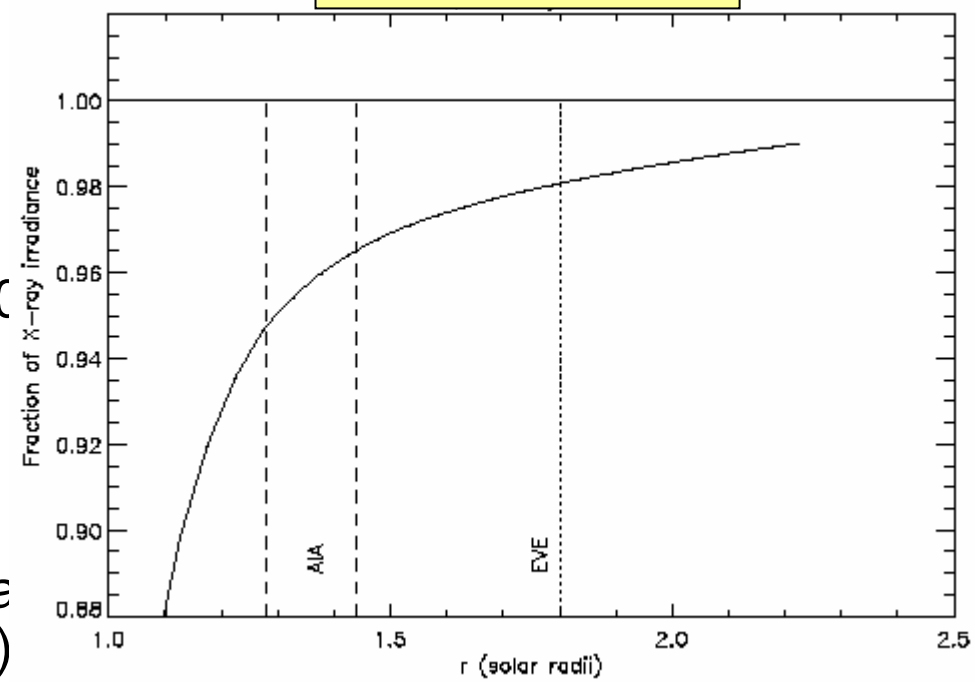

Estimated X-ray radiance at 3 MK as observed by Yohkoh/SXT as function of limb height.

Implementation of AIA FOV

- AIA will have 41 arcmin FOV along detector axes
- AIA will have 46 arcmin FOV along diagonal of detector
- Corners of the FOV are vignetted by the filterwheel filters

Composite Trace Image

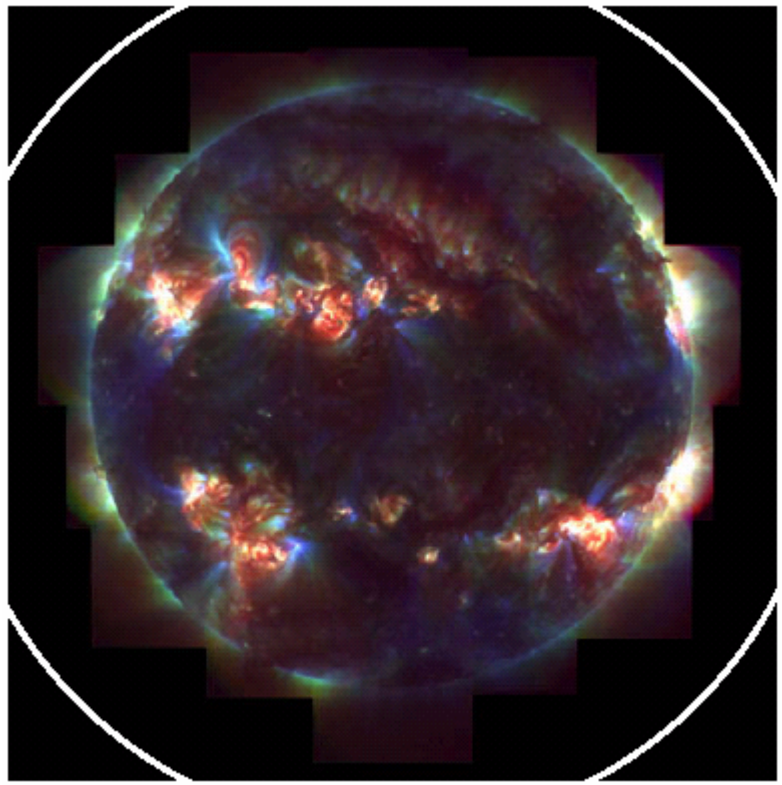

41 arcmin

AIA System Requirements

Science questions determine the top level system properties.

1. Field of View (FOV) and Pixel Size
2. **<u>Spatial Resolution</u>**
3. Temperature Coverage
4. Cadence
5. Dynamic Range
6. Guide Telescope

The system properties flow down to the component properties.

1. Filters, coatings, and detector
2. Mechanisms
3. Image Stabilization System
4. Electronics and Software

Spatial Resolution

- Telescope response must be adequate over the entire FOV
- Criterion: spot size must fall within 1.2x1.2 arcsec^2
- e2v detector has 12 μm pixel size (=0.6 arcsec) ⇒ focal length (4.125 m)
- Two optical designs are being considered
  - Ritchey-Crétien: minimizes coma – results in symmetric PSF across

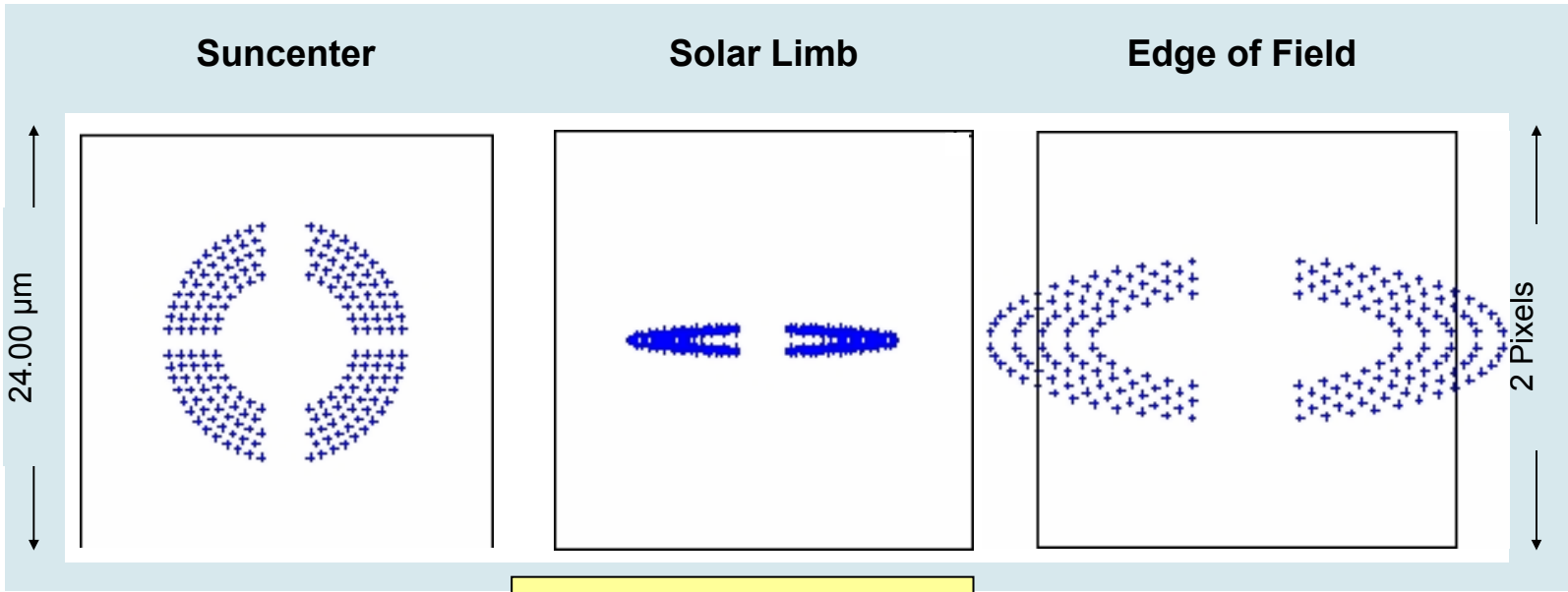

Candidate Optical Prescription

Each channel (half telescope) fits within 2×2 pixels

AIA System Requirements

Science questions determine the top level system properties.

1. Field of View (FOV) and Pixel Size
2. Spatial Resolution
3. **<u>Temperature Coverage and Telescopes</u>**
4. Cadence
5. Dynamic Range
6. Guide Telescope

The system properties flow down to the component properties.

1. Filters, coatings, and detector
2. Mechanisms
3. Image Stabilization System
4. Electronics and Software

Temperature Coverage Requirement

- The AIA instrument shall acquire solar images that cover a plasma temperature spanning from 5000K to 20MK with 8 wavebands
  - This requirement requires a broad range of wavelengths covering the optical, UV, EUV, and potentially X-rays

- AIA science themes 1, 2, 3, 4 require that the temperature resolution be $\Delta \log T \sim 0.3$
  - This requirement set limits on the bandpass of each channel.
  - Many science objectives will depend on the simultaneous multi-wavelength observations
  - One analysis technique we expect to use commonly is differential emission measure (DEM) modeling [Channel intensities: $I_i = // G_i(T_e) n_e^2(T_e) dT_e dl$]

Selection of non coronal lines

- UV channel will have three filters: White light, C IV 1550, UV Continuum
  - White light used for ground calibration
  - White light used for co-alignment with HMI and other ground-based instruments
  - UV filters are similar to TRACE bandpasses
    - Study waves and field going into the corona as well as particle beams and conducted thermal energy coming down

- He II 304A
  - Observes the chromosphere
  - Monitor filaments
  - Key driver to chemistry of the Earth's outermost atmospheric layers

Example of a prominence observed by SOHO/EIT. The upper chromosphere has a temperature of 60,000 K.

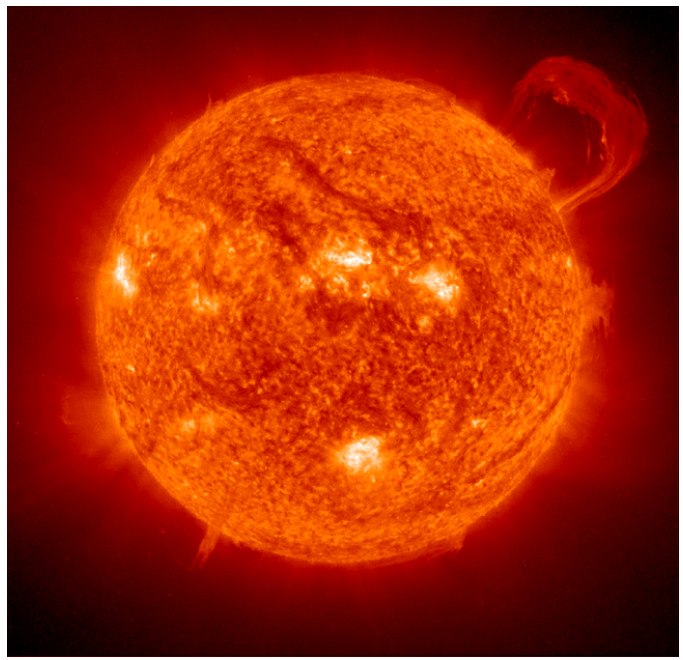

EIT 304A

14 Sept 1999

AIA temperature coverage

- EUV Wavelength selection meets AIA science objectives

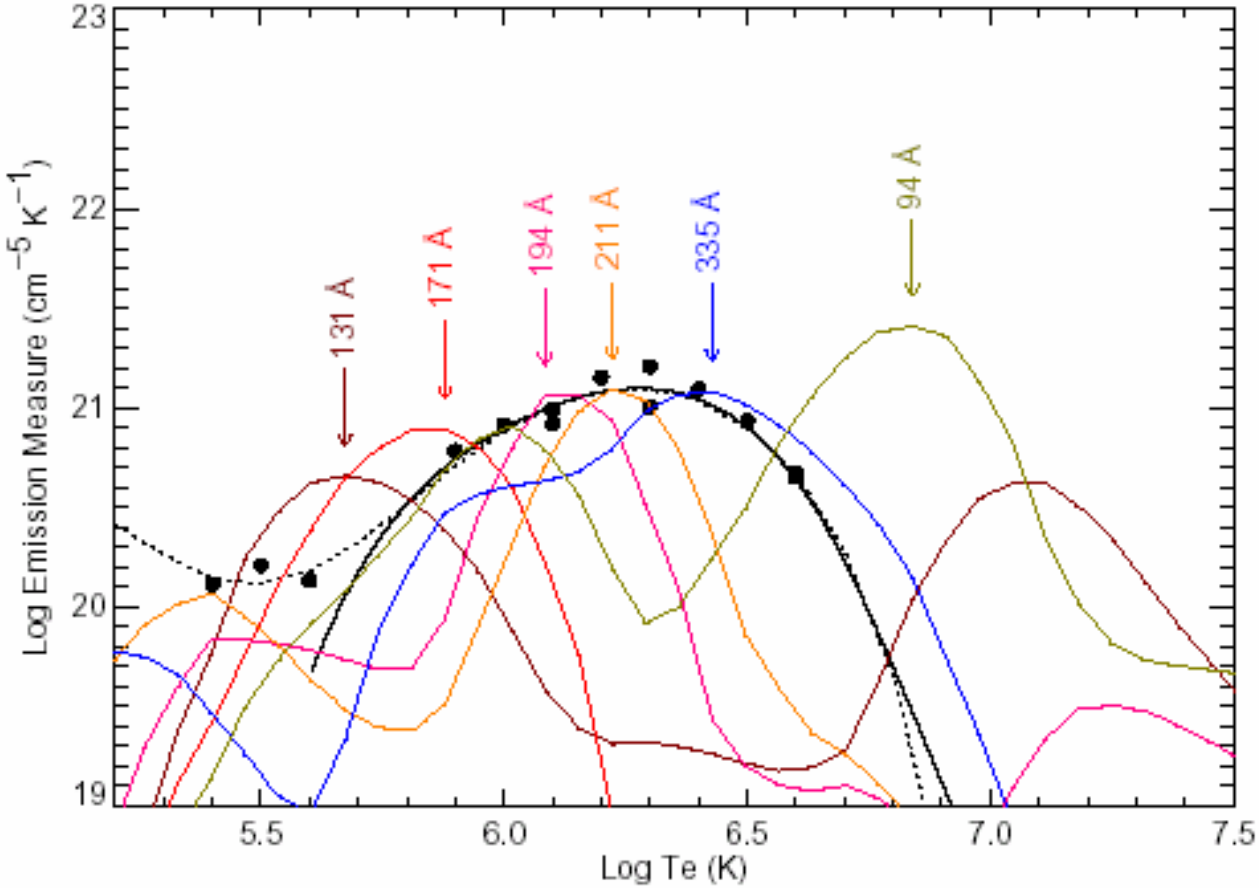

Dots are SOHO/CDS + Yohkoh data. Black curve is the recovered DEM using simulated AIA responses. The responses of the AIA channels are shown normalized to recovered DEM.

DEM Reconstruction Tests

- Tests performed with simulated data – predicted AIA response functions show that multiple channels are necessary to constrain solution for DEM
  - Consistent with the fact that the solar atmosphere is emitting over a broad range of temperatures
  - With five channels, it is often possible to achieve solutions, but the quality of the recovered DEM improves with the number of temperature channels

4 channels
(131,175,193,211)

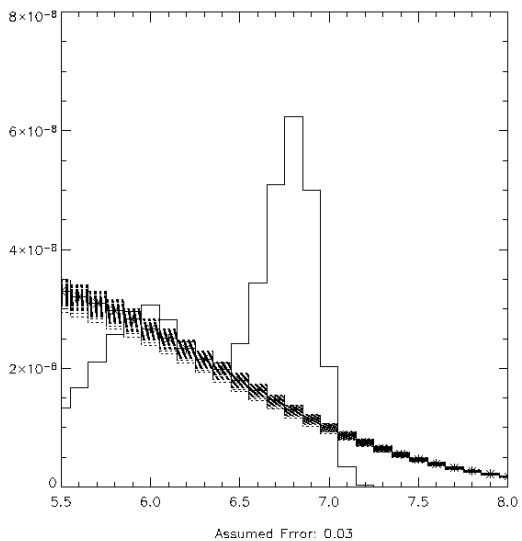

7 channels
(6 EUV+304)

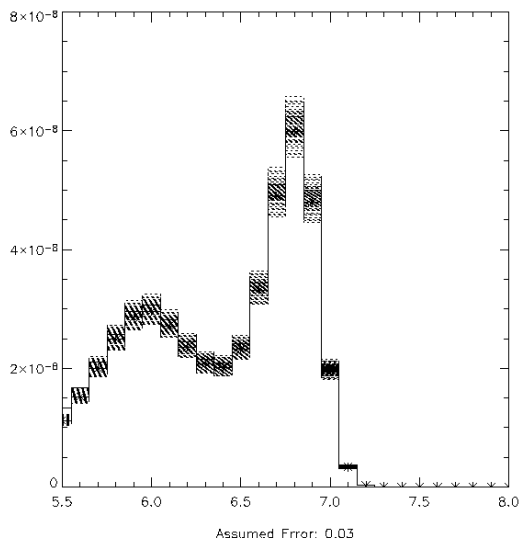

From Deluca et al (AIA00407)

AIA Telescopes & Wavelengths

Looking at the AIA from the Sun

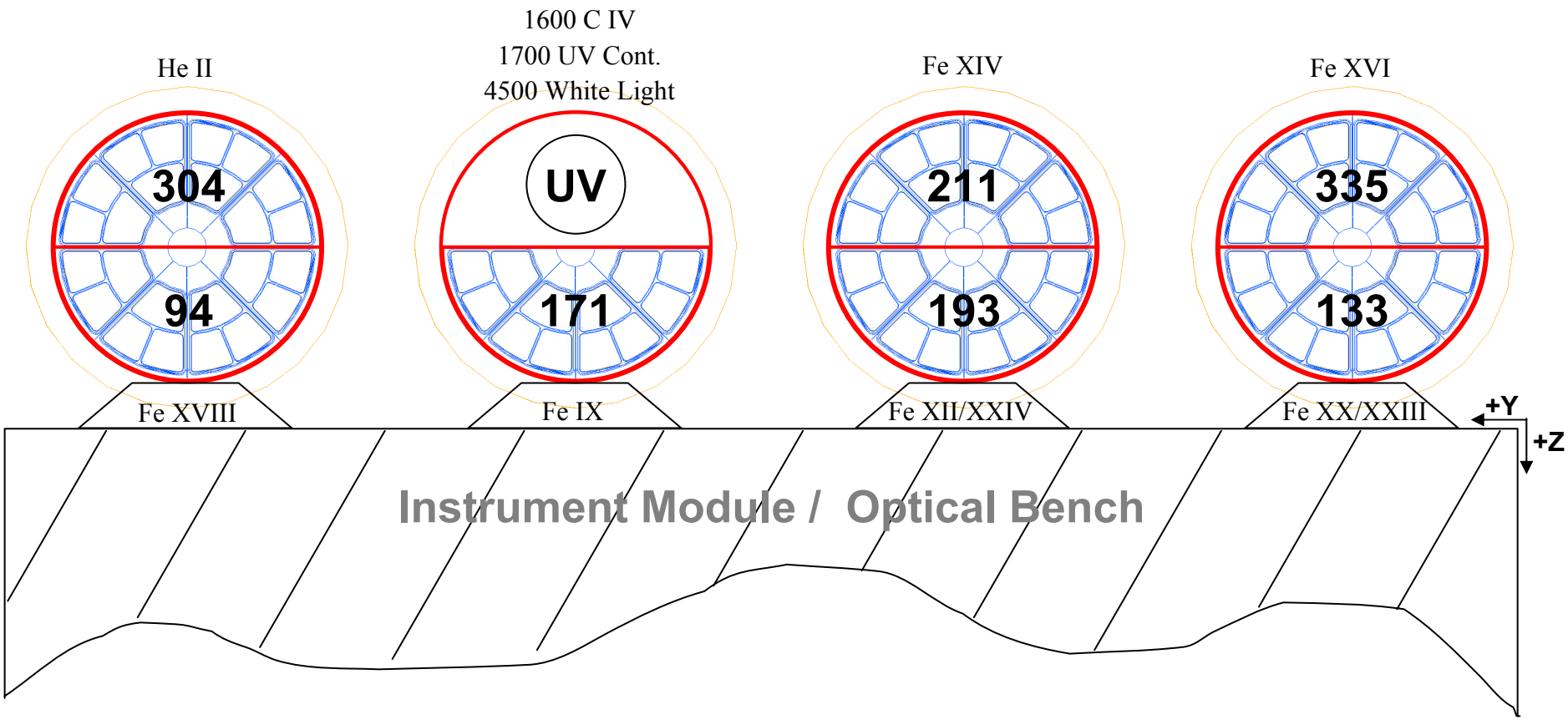

Mesh Filter Mounts

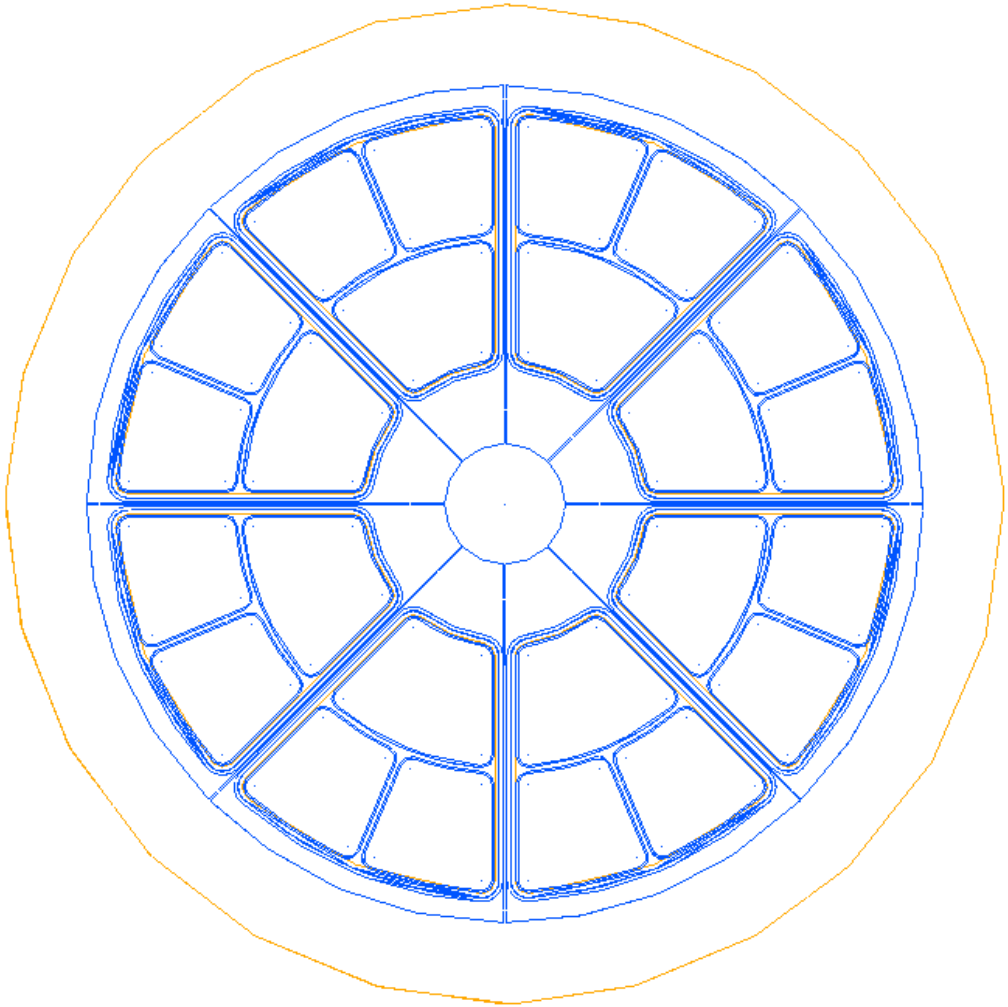

AIA Telescope with Quad Selector

Cables route to primary end of telescope

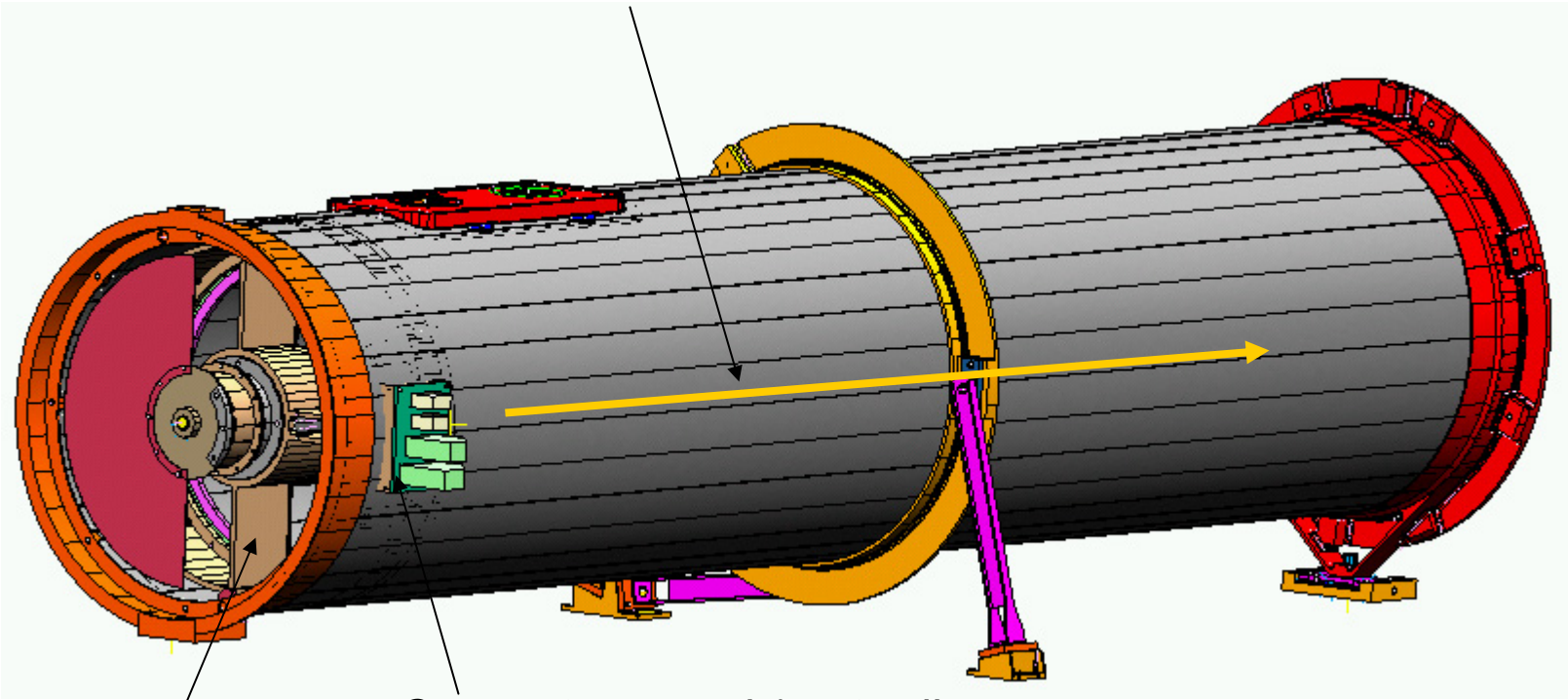

Connector panel (protruding through cutout in graphite tube)

Spider Assembly

AIA Telescope Assembly Drawing

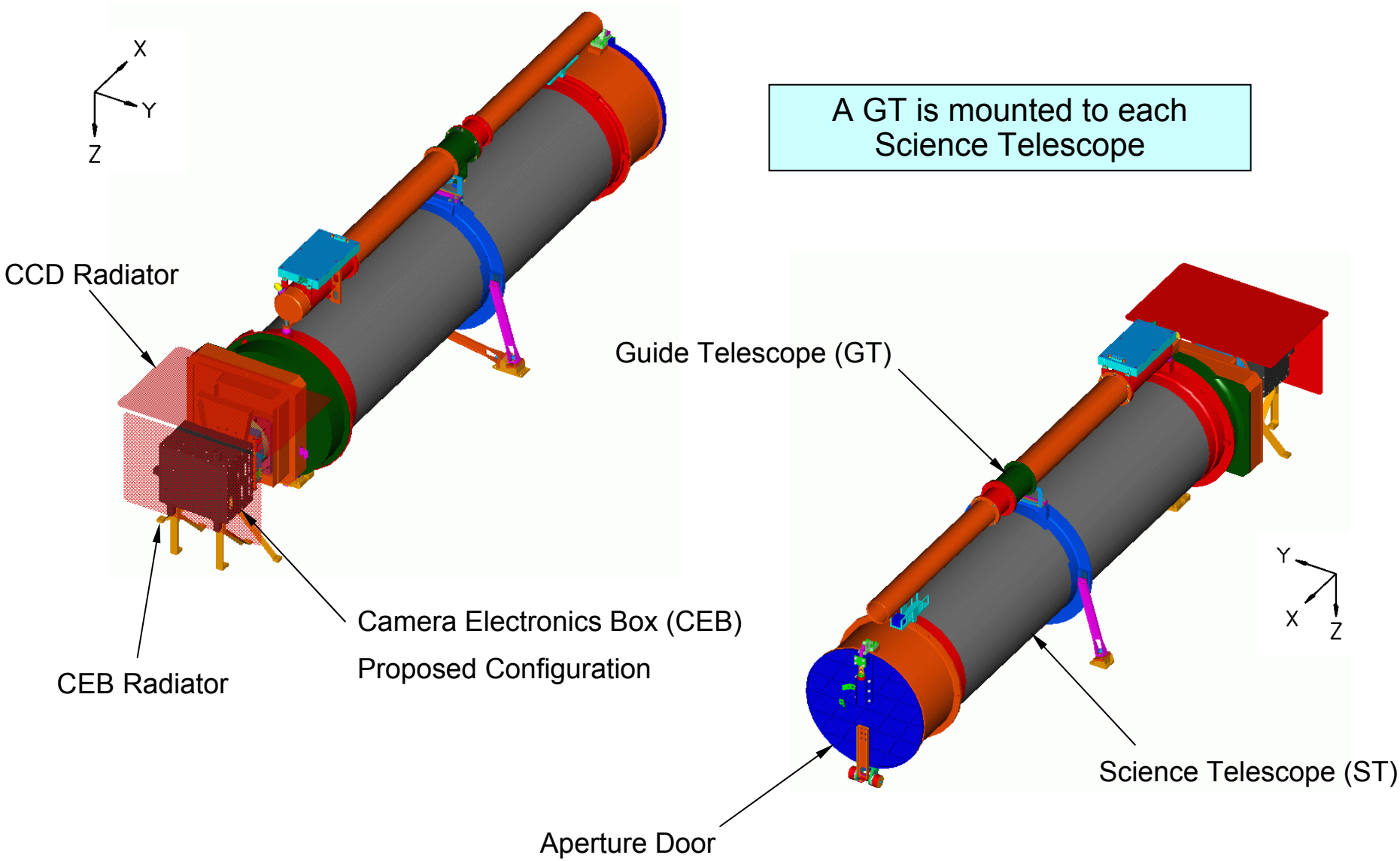

AIA Telescope Array Mounted on IM

- Four nearly identical science telescopes
- Each ST has a dedicated guide telescope for ISS

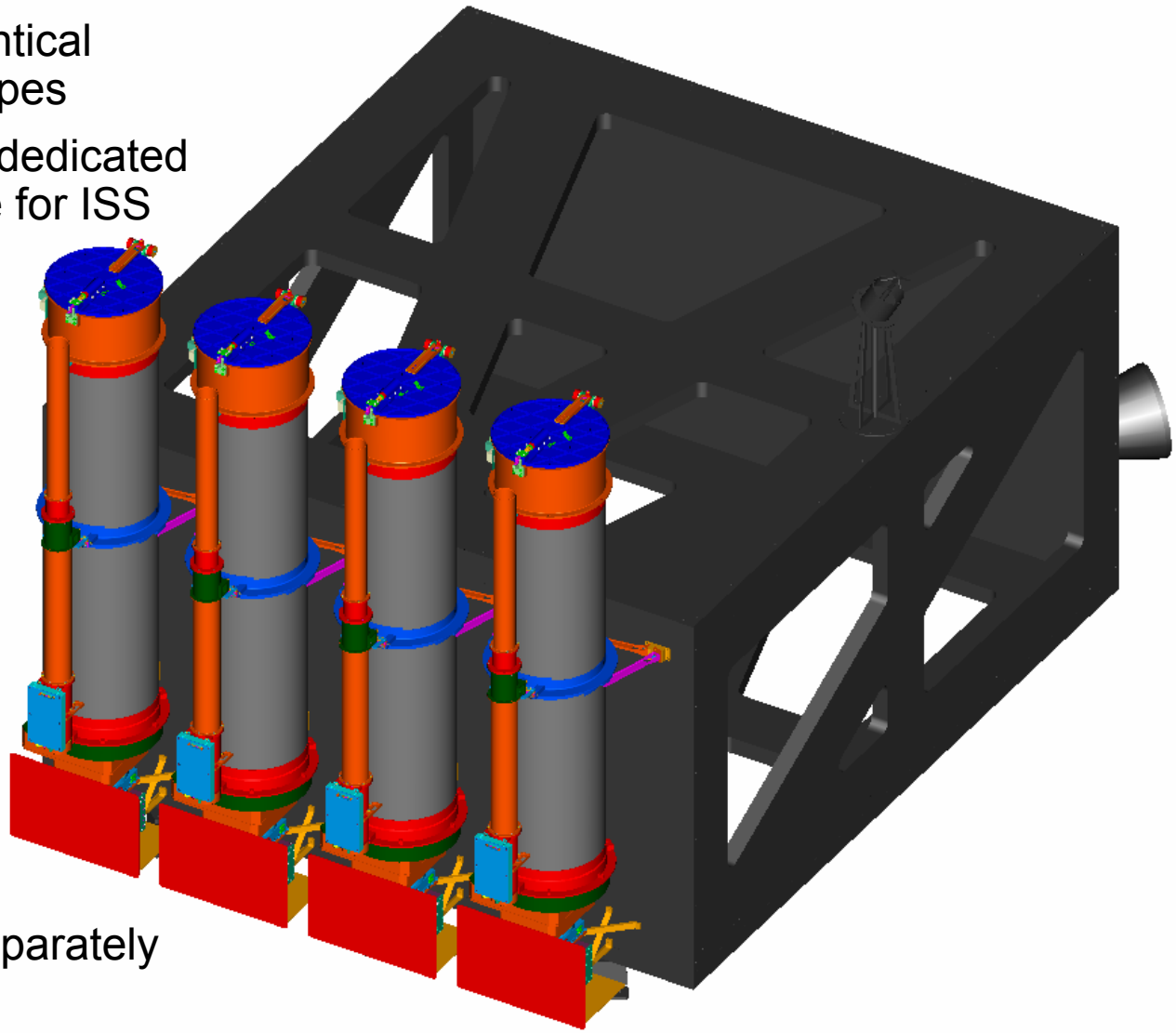

- CEB mounts separately to the IM

AIA Science Telescope Optical Layout

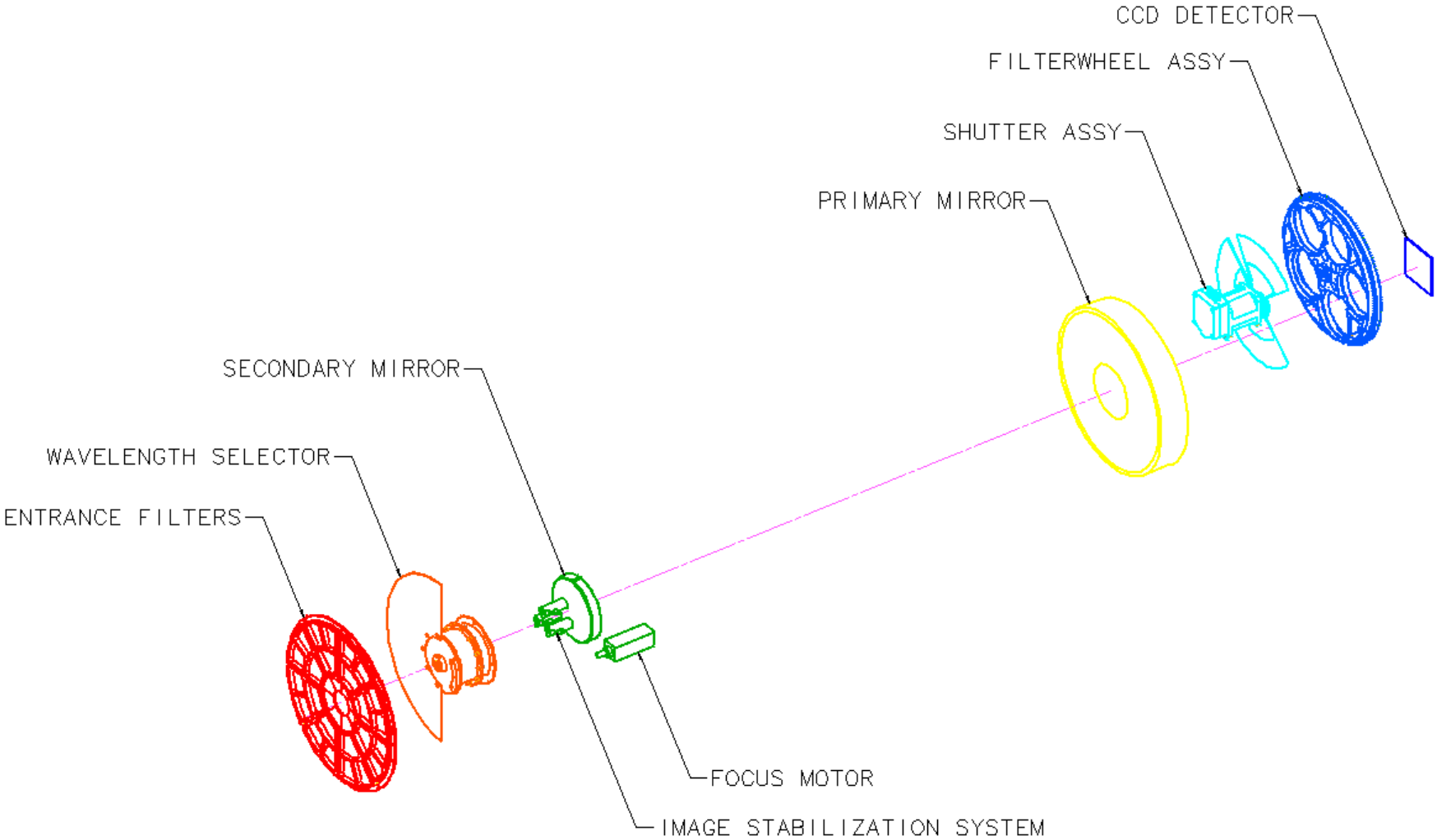

AIA System Requirements

Science questions determine the top level system properties.

1. Field of View (FOV) and Pixel Size
2. Spatial Resolution
3. Temperature Coverage
4. **<u>Cadence</u>**
5. Dynamic Range
6. Guide Telescope

The system properties flow down to the component properties.

1. Filters, coatings, detector performance
2. Mechanisms and their performance
3. Image Stabilization System
4. Electronics and Software

Cadence Requirement

- The AIA shall have an observational cadence of one set of 8 wavelengths every 10s or shorter
- The AIA signal to noise of images shall be 8 in quiet sun, 20 in active sun
- AIA science themes: All (5) require high cadence of at least 10s. Science themes 3 and 5 would benefit from an even higher cadence
  - These requirements drive a multiple telescope approach in order to obtain necessary signal strength with corresponding simultaneity
  - Eight telescopes would meet the requirement, but requires greater resources
    - Chose an optimized approach in which each telescope observes two bandpasses
  - These requirements drive minimum telescope effective area, multilayer reflectivity requirements, CCD efficiencies, camera readout times, and mechanism set-up performance

AIA System Requirements

Science questions determine the top level system properties.

1. Field of View (FOV) and Pixel Size
2. Spatial Resolution
3. Temperature Coverage
4. Cadence
5. **<u>Dynamic Range</u>**
6. Guide Telescope

The system properties flow down to the component properties.

1. Filters, coatings, detector performance
2. Mechanisms and their performance
3. Image Stabilization System
4. Electronics and Software

Dynamic Range Requirement

- The AIA signal to noise of images shall be 8 in quiet sun, 20 in active sun
  - Requires a dynamic range of at least 400 for photon statistics
- AIA instruments shall provide cameras with a dynamic range of at least 13 bits
- AIA Science Objectives 2 and 3 require a dynamic range of >1,000
  - Camera requirements clear from MRD 3.3.6
  - Detector must have adequate dynamic range
    - 335 A channel is the limiting case for EUV wavelengths: (12.398/335)/3.65*150,000=1521
- AIA implementation: dynamic range between 1,500 and 4,000
  - e2v CCD: low noise, high efficiency, adequate well depth (>150,000 electrons)
  - Camera design has 14 bit A/D converter

AIA System Requirements

Science questions determine the top level system properties.

1. Field of View (FOV) and Pixel Size
2. Spatial Resolution
3. Temperature Coverage
4. Cadence
5. Dynamic Range
6. **<u>Guide Telescope</u>**

The system properties flow down to the component properties.

1. Filters, coatings, detector performance
2. Mechanisms and their performance
3. Image Stabilization System
4. Electronics and Software

Guide Telescope Requirements

- The AIA shall provide four identical guide telescopes each with a noise equivalent angle of 1 arcsec and update frequency to the spacecraft of at least 10 Hz
- The guide telescopes shall be designed such that the science sun acquisition can be performed given an initial pointing error of 120 arcsec (3 sigma) in the y and z axes
- The tracking signal has a linear range: ±95 arcsec

Derived requirements

- Used for AIA image stabilization system (ISS)
- Must have good mechanical coupling to science telescope (first mode must be >100 Hz)

Science Reference Boresight

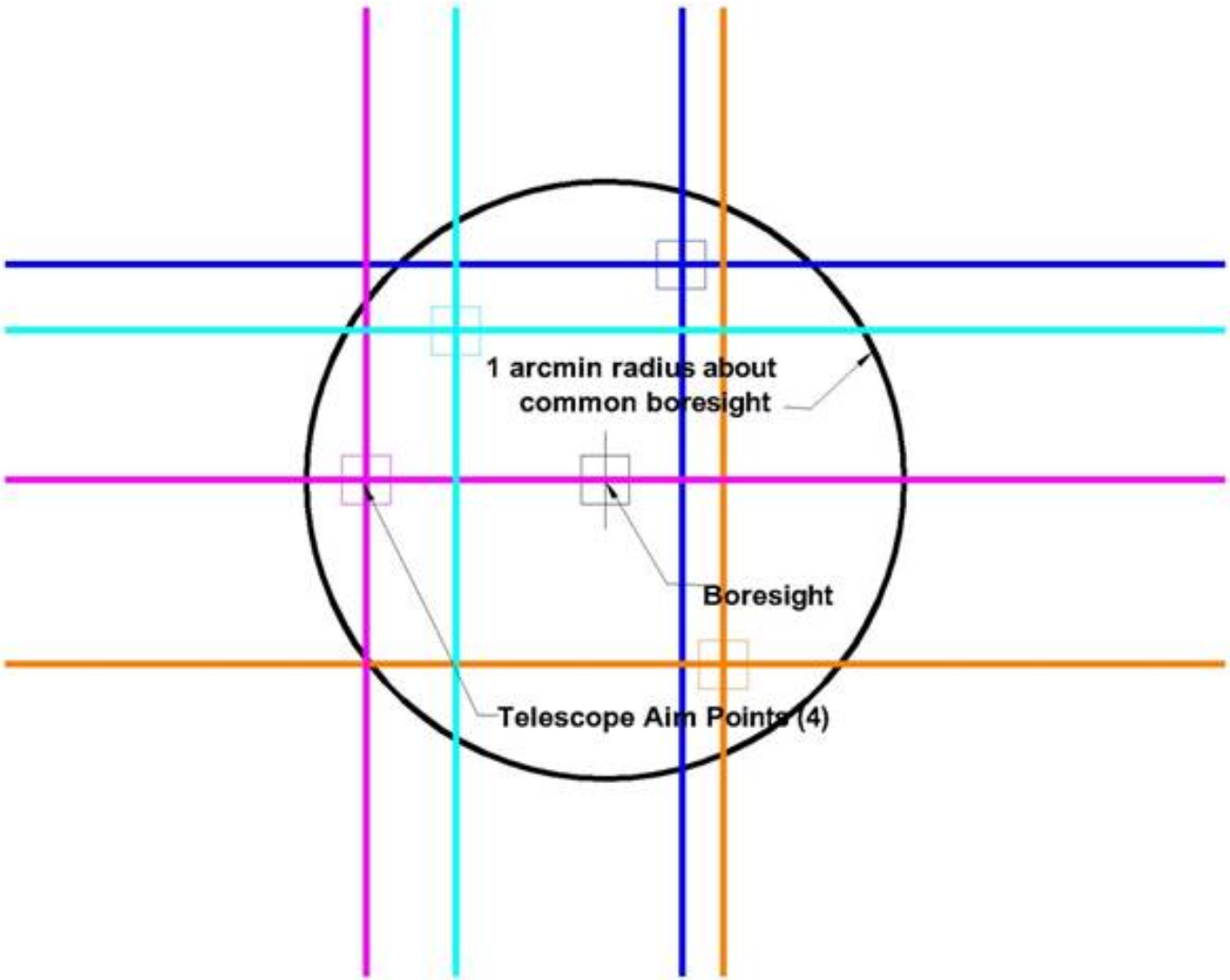

GT Error Signals & Noise Levels

- Each GT produces high bandwidth analog pointing error signals for image motion by rotations about the Y & Z axes (pitch and yaw)
- Analog signals are used by the image stabilization system (ISS) within the associated Science Telescope
- Digitized versions of the signals are used for S/C ACS pointing, housekeeping data on ISS health, high rate diagnostic data for ISS calibration
  - Signals from all GT's sent to S/C
  - S/C points to null the primary GT signal plus bias (between SRB and GT)
  - Bias will be determined on ground and uplinked, after periodic (like monthly) GT & ST pointing calibrations

- GT Noise Level will be determined by electrical noise, not photon noise
  - 5 Volt analog signal corresponds to approx. +/-100 arcsec
  - Digitized to 12 bits ➔ LSB = 0.05 arcsec = 1.2 milli-volts, very small
  - TRACE & SECCHI GT have instantaneous 1-sigma noise ~10 mV = 0.4 arcsec
  - Noise will be reduced by averaging samples in AIA processor, as on TRACE

GT Design

- Mechanically similar to STEREO/SECCHI
- Same optical prescription as TRACE
- Linear range is ±95 arcsec
- Co-alignment to science telescope is <±20 arcsec
- One will be ACS prime and the others will be redundant
  - All four are available to the ACS
  - Photo diodes and preamp circuits are redundant
  - No cross-strapping for ISS

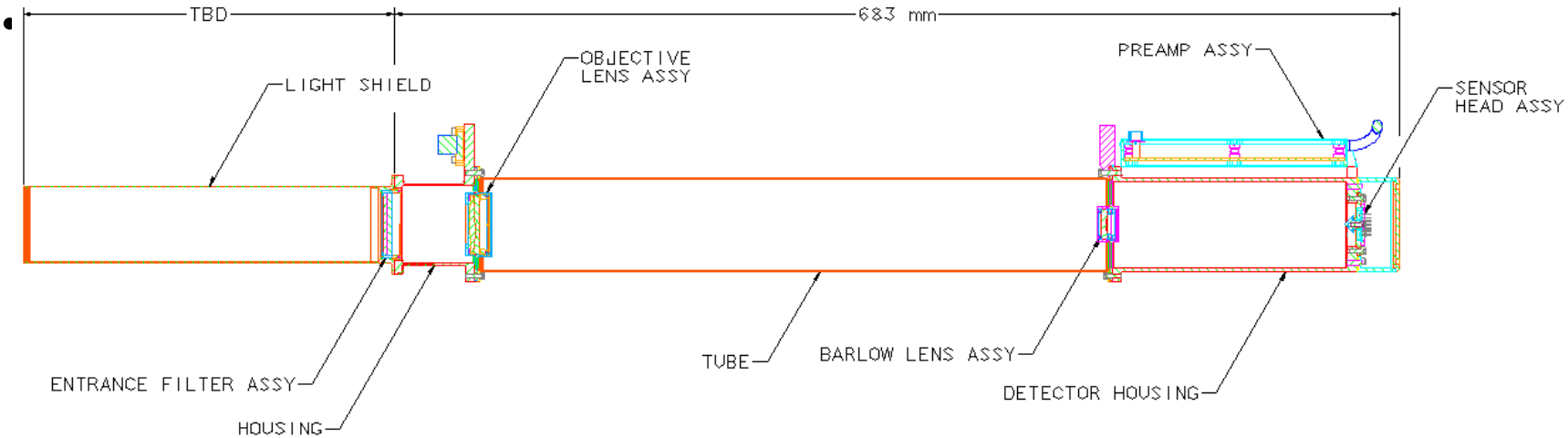

SECCHI Guide Telescopes

- AIA mechanical design is a copy of the STEREO/ SECCHI design
- Optical prescription is same as TRACE
- Preamp electronics are identical to SECCHI

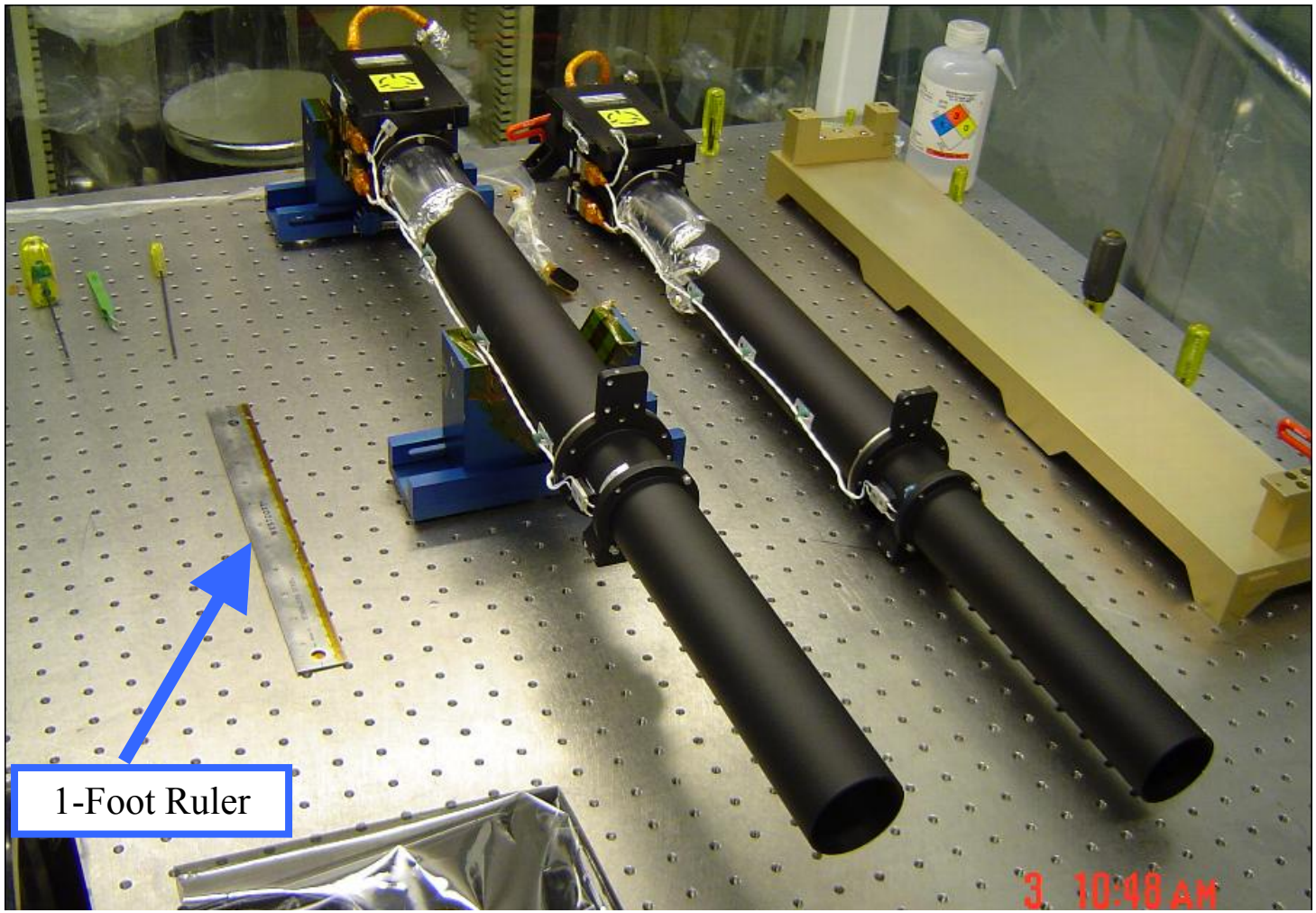

AIA System Requirements

Science questions determine the top level system properties.

1. Field of View (FOV) and Pixel Size
2. Spatial Resolution
3. Temperature Coverage
4. Cadence
5. Dynamic Range
6. Guide Telescope

The system properties flow down to the component properties.

1. **<u>Filters, coatings, and detector performance</u>**
2. Mechanisms and their performance
3. Image Stabilization System
4. Electronics and Software

Filter Requirements

- Entrance Filters
  - Must block 10^{-5} of out-of-bandwidth radiation
  - Used for wavelength selection (Al or Zr) in two telescopes (94/304; 133/335)
  - Flows down requirements to door, multifaceted frame mesh

- Filterwheel Filters
  - Must block 10^{-6} of out-of-bandwidth radiation
  - Wavelength selection (Al or Zr) in two telescopes (94/304; 133/335)
  - UV filters must have appropriate bandpasses for C IV, UV Cont, visible light

- Alignment requirement (for diffraction correction)
  - Support grids will create diffraction
  - Alignment will facilitate removal during ground analyses
  - Entrance filter support structure shall be aligned to 45 $\pm$1 degrees (wrt CCD)

Zr & Al used to select wavelengths

- Properties of zirconium and aluminum are used to select the wavelengths in two of the telescopes: 94/304 and 133/335
- Al filters are similar to that used on TRACE and STEREO/SECCHI
- Zr has been developed by Luxel, but no flight experience

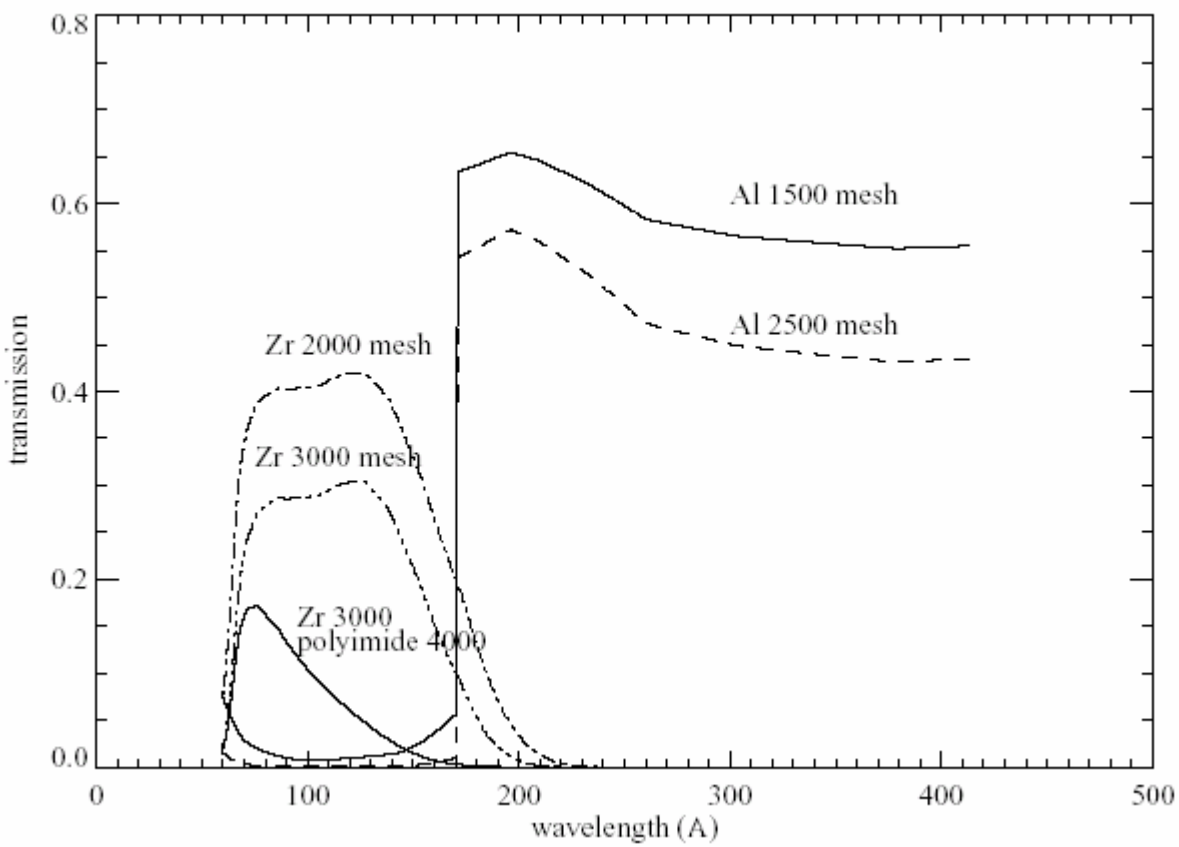

Coatings Requirements

- With filter transmissions must provide ΔlogT~0.3
- Must provide adequate reflectivity to meet cadence requirements (maximum of 2.7s exposures to meet 10s/2 cadence)

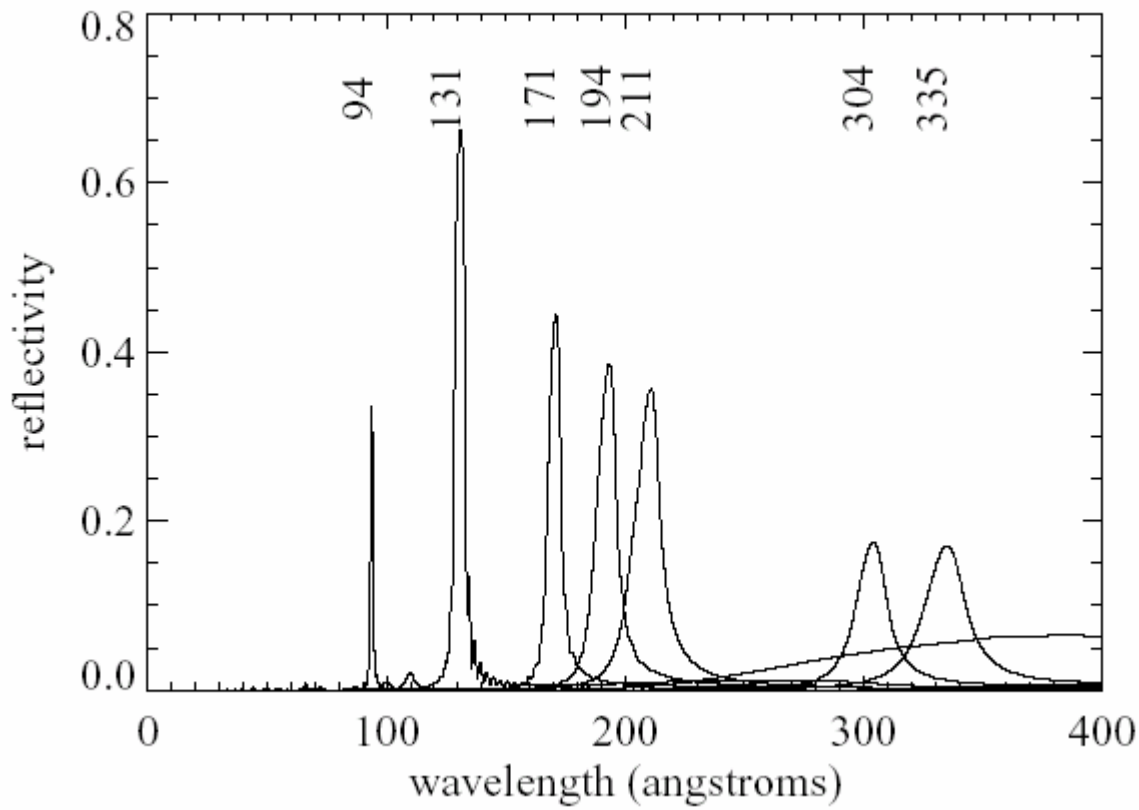

Summary of filters and coatings

- The choice of filters makes it possible to select wavelengths on each half of the telescope by choosing the appropriate filter except for the 193/211 telescope
- Filter 2 represents a redundant filter
- The Zr (3000 Å)/Poly filter in the 133/335 telescope could be used for additional attenuation during flares

Telescope	λ (Å)	Ion	Coating Materials	Entrance Filter	Filterwheel Filter 1	Filterwheel Filter 2
1	1550 1600 4500 171	C IV Continuum White Light Fe IX	Al Al Al Mo/Si	Bandpass on MgF_2 Al, 1500 Å	Bandpass/MgF_2 Bandpass/silica Bandpass/silica Al, 1500 Å	 Al, 2500 Å
2	94 304	Fe XVIII He II	Ru/Y SiC/Si	Zr, 2000 Å Al, 1500 Å	Zr, 2000 Å Al, 1500 Å	Zr, 3000 Å Al, 2500 Å
3	133 335	Fe XX/XXIII Fe XVI	Mo/Si SiC/Si	Zr, 2000 Å Al, 1500 Å	Zr, 2000 Å Al, 1500 Å	Zr/Poly Al, 2500 Å
4 Ap Select	193 211	Fe XII/XXIV Fe XIV	Mo/Si Mo/Si	Al, 1500 Å Al, 1500 Å	Al, 1500 Å Al, 1500 Å	Al, 2500 Å Al, 2500 Å

Detector Requirements

- Sensitivity (from cadence and minimum exposure time)
- Pixel size (from resolution, telescope design)
- Array size (from FOV requirement)
- Well depth (dynamic range)
- Cooling: Need to cool below –65C
  - Dark current performance
  - Mitigate loss of charge transfer efficiency due to radiation damage

CCD Camera Systems

- CCD Camera Systems are key elements of HMI & AIA
  - Were to be provided by UK Co-investigators
  - Now being procured from UK suppliers under subcontracts (same sources, however)
  - HMI and AIA use indentical cameras and CCDs except AIA CCDs are back-side thinned
- CCD – 4096 x 4096, 12 micron pixels
  - Extension of devices that are being used on Solar-B FPP (2048 x 4096 pixels)
  - E2v has already produced non-flight functioning devices
- CEB – 8 Mpixels/sec via 2 Mpixels/sec from 4 ports simultaneously
  - Extension of SECCHI/STEREO cameras by RAL
  - Design modifications are quite mature with rescopes being imposed early to maintain schedule

CCDs and Cameras

Packaged thin gate CCD

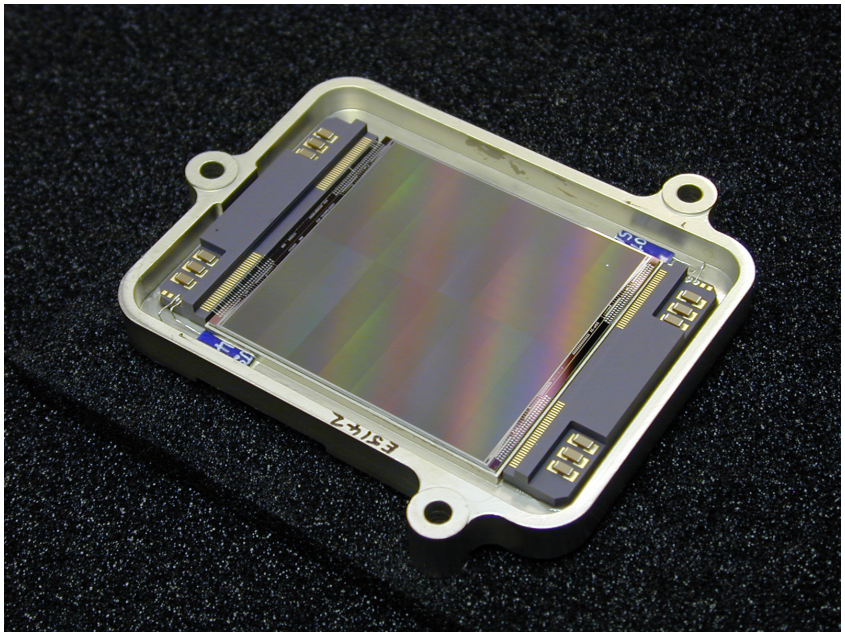

Probe image
(thin gate, room temp)

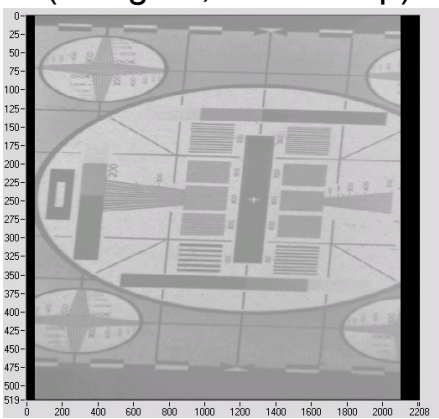

Commissioning image

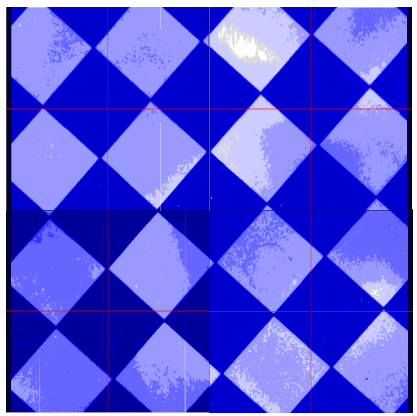

CCD Status:

- Three batches of devices processed
- Third batch in probe testing and shows better yield
- Images from first packaged device
- Reviews in England
  - July 03 Peer Review
  - Feb 04 Demo Phase Review
- Deliver evaluation unit to RAL late-March
- Deliver 2 evaluation units to LMSAL April 04

CEB Status:

- Video board schematic is complete
- Characterized the ghosting affect
- CDS/ADC ASIC is being processed
- Existing wave form generator ASIC are being packaged
- Progress is being made on the mechanical interface
- Reviews in England
  - July 03 Requirements review
  - Sept 03 ICD discussions at RAL
  - Feb 04 Proposal and status discussions

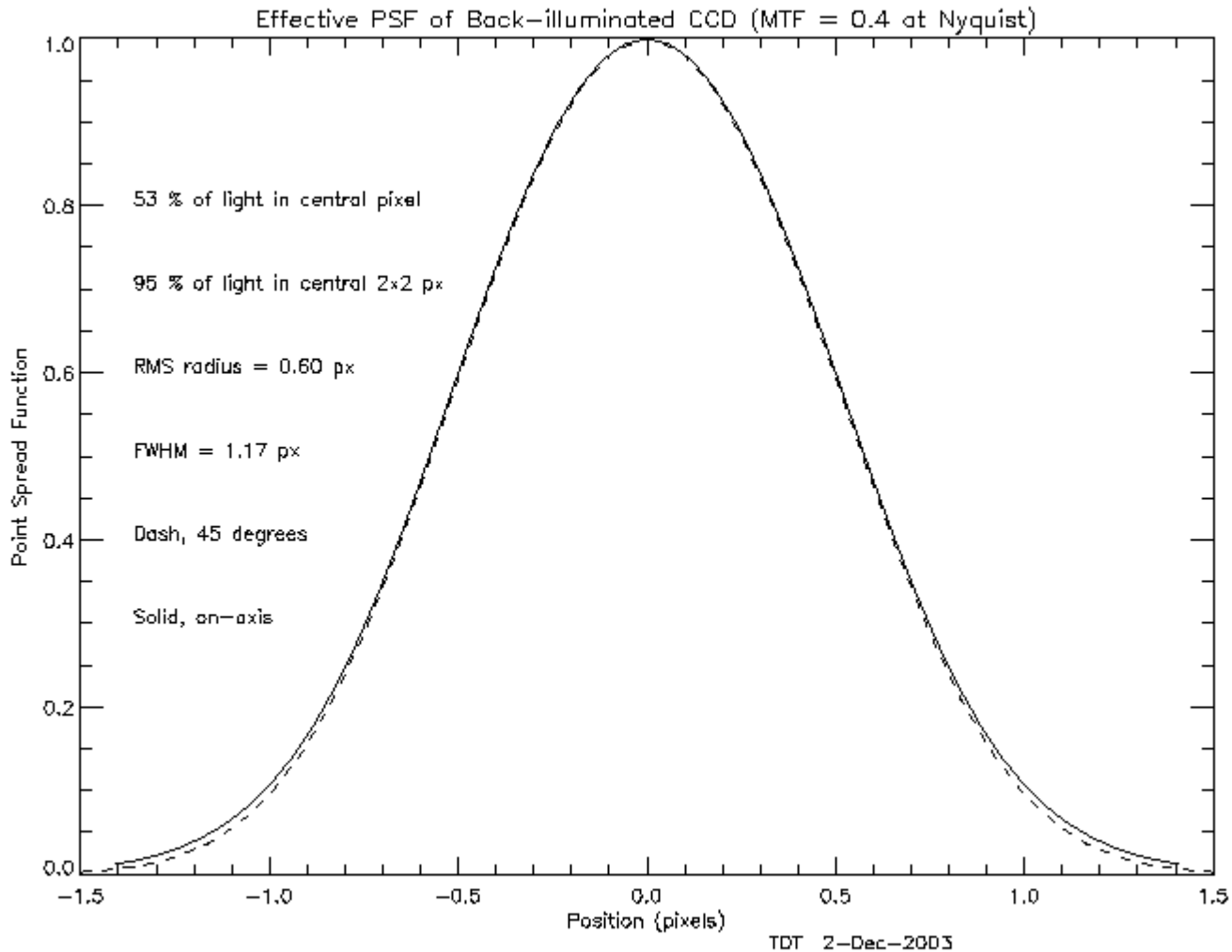
Effective PSF of Back-illuminated CCD (MTF = 0.4 at Nyquist)
53 % of light in central pixel
95 % of light in central 2x2 px
RMS radius = 0.60 px
FWHM = 1.17 px
Dash, 45 degrees
Solid, on-axis
Point Spread Function
Position (pixels)
TDT 2-Dec-2003
1.0
0.8
0.6
0.4
0.2
0.0
-1.5
-1.0
-0.5
0.0
0.5
1.0
1.5

CCD QE estimates based on SXI

- AIA detector quantum efficiency is based on GOES SXI measurements of back-illuminated e2v devices
- Experience with SXI and SECCHI programs indicate consistent QE performance within a wafer run

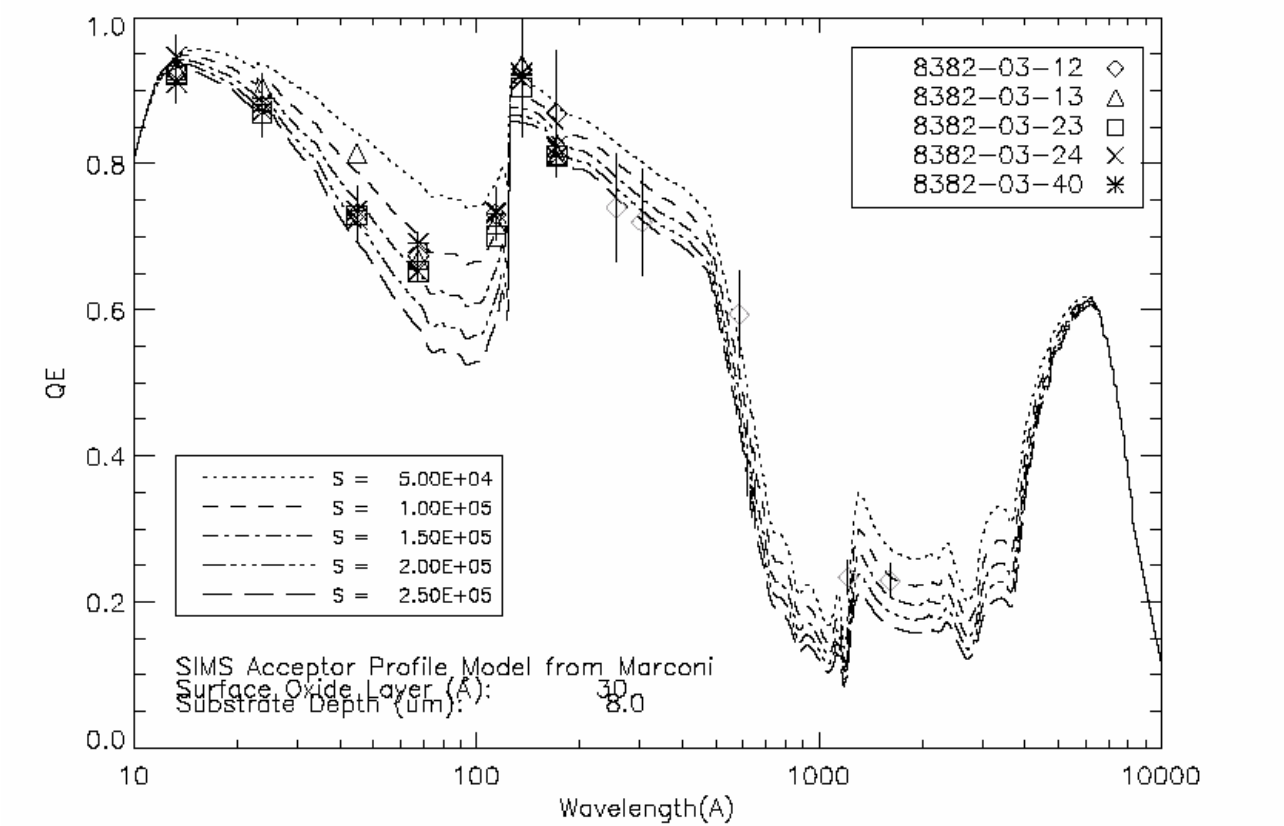

AIA response functions (1 of 2)

- Computed AIA response functions

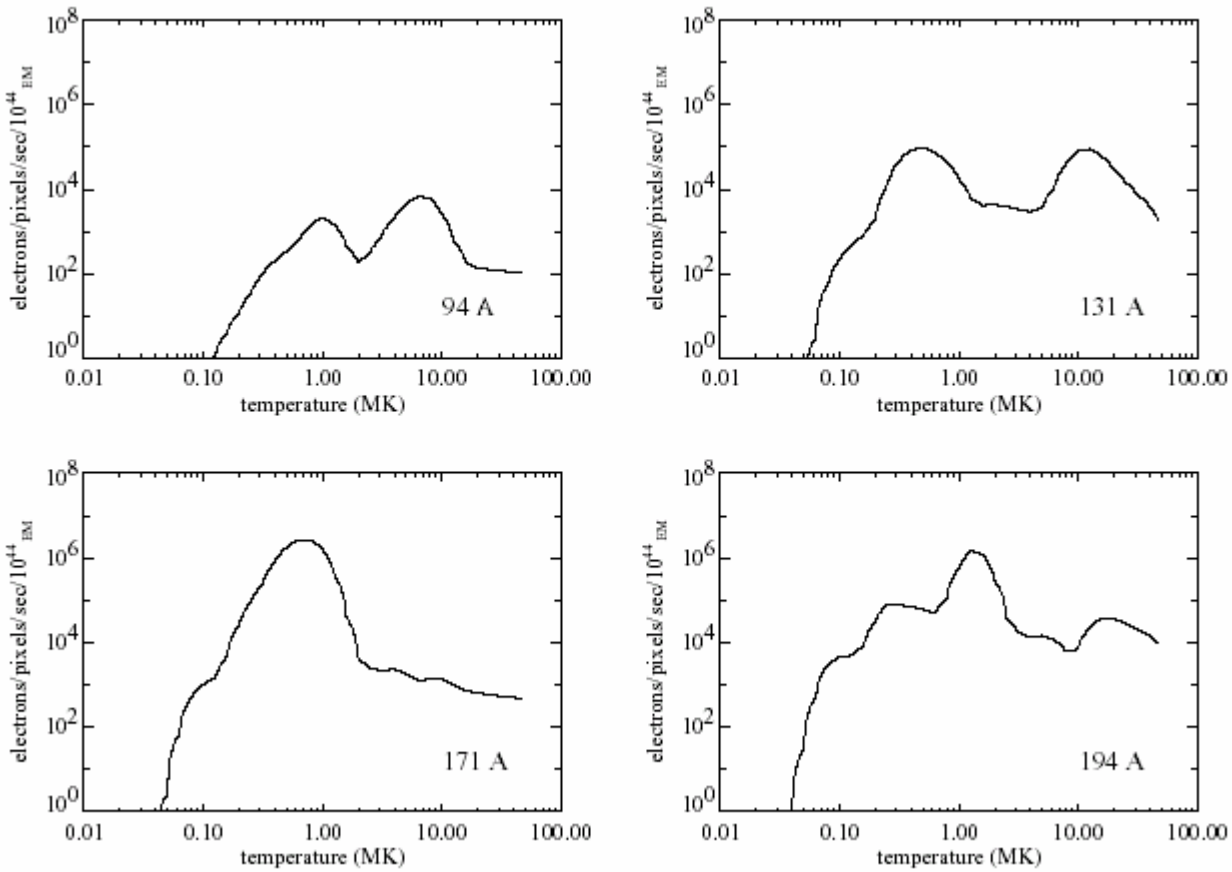

AIA response functions (2 of 2)

- Computed AIA response functions

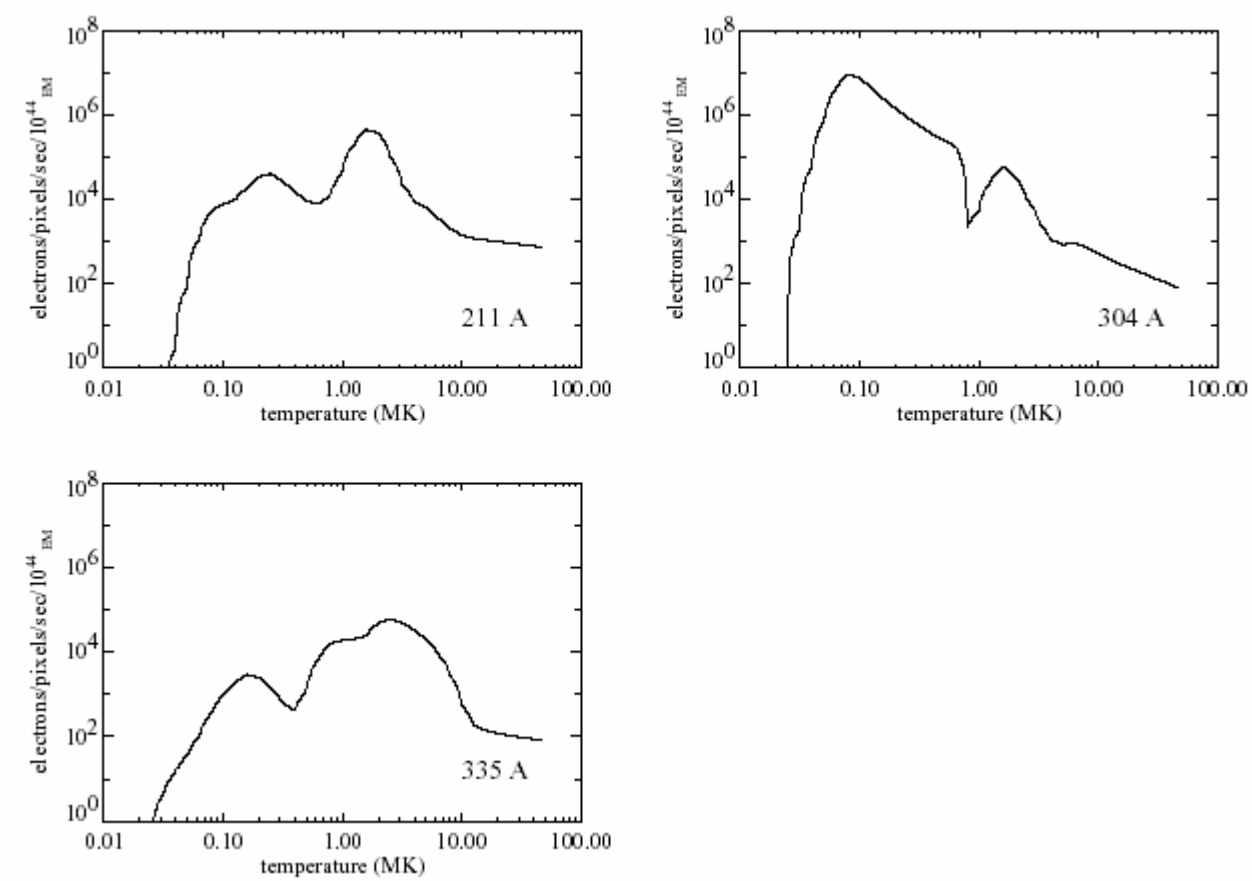

AIA observing times

- Provides for dynamic range of 8 (QS) and 20 (AR) [MRD 1.5.7]
- Provides 10s or better cadence with two wavelength channels per telescope

Predicted EUV Countrates

Photons per pixel per 2.7s exposure, or time to full well (<…>)

Channel	Quiet Sun	Active Region	M flare	Microflare
94 Å		35	<0.1s>	170
131Å	22	240	<2.8ms>	3,400
171Å	1,100	<2.1s>	<57ms>	<0.19s>
193Å	810	<1.6s>	<7.1ms>	<0.3s>
211Å	250	6,600	<74ms>	<1.1s>
304Å	2,500	8,100	<10ms>	
335Å	61	2.700	<97ms>	5,200

Assumes thin filter wheel filters From CSR, Appendix A

AIA System Requirements

Science questions determine the top level system properties.

1. Field of View (FOV) and Pixel Size
2. Spatial Resolution
3. Temperature Coverage
4. Cadence
5. Dynamic Range
6. Guide Telescope

The system properties flow down to the component properties.

1. Filters, coatings, and detector
2. **<u>Mechanisms</u>**
3. Image Stabilization System
4. Electronics and Software

Cross section: mechanism locations

- Requirements have been flowed down to all mechanisms
- Five mechanism types: all have design heritage

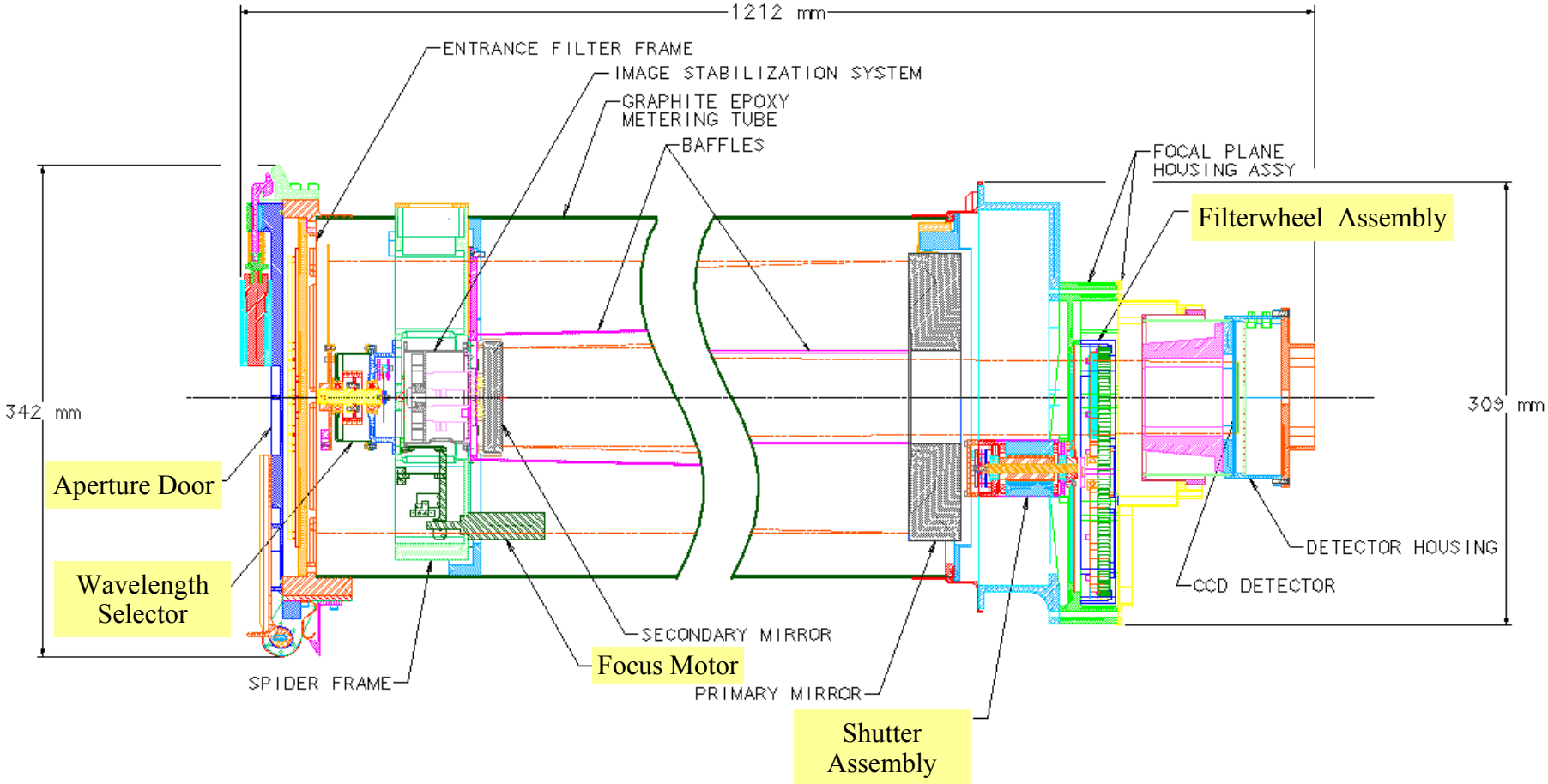

Mechanism Requirements (1 of 3)

- Aperture Door
  - Tight seal to protect entrance filters
  - Particle protection
  - Operates once on orbit
  - AIA design based on simplified TRACE design (no vacuum chamber)
  - Wax actuator controlled by AEB
- Focus Mechanism
  - Telescope tubes are made of carbon fiber with low CTE
  - Mechanism is required to have a ±100 μm range
  - AIA design has ±800 μm range
  - Moves the secondary mirror
  - Based on the TRACE design
    - Need to develop max ops spec

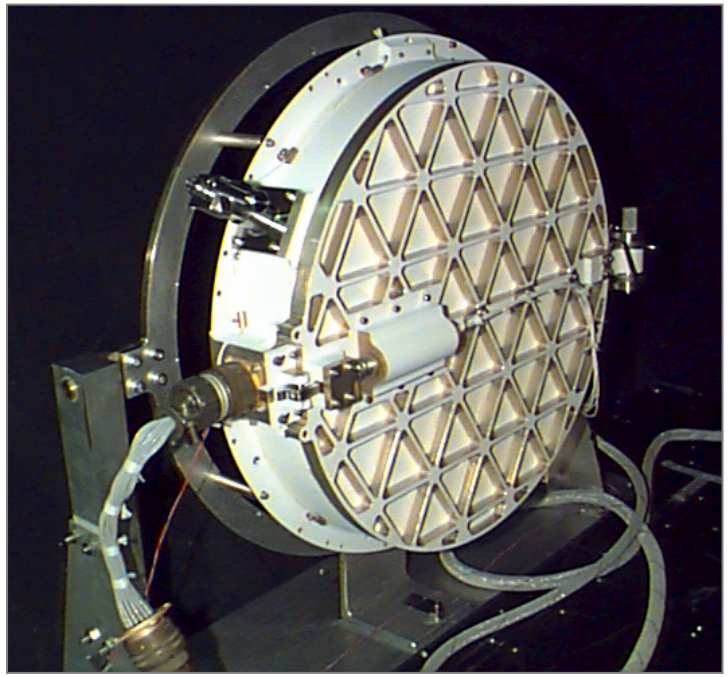

TRACE door

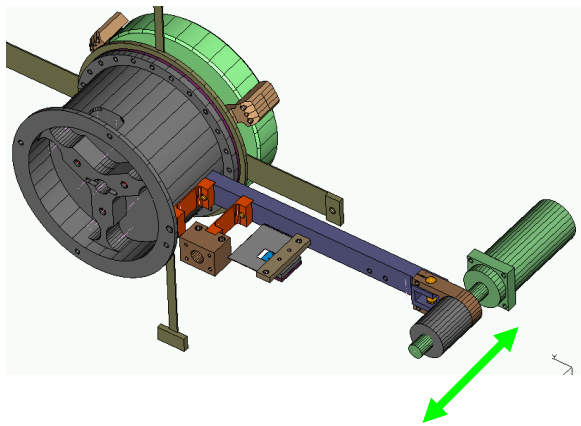

Focus Mech Design

Mechanism Requirements (2 of 3)

- Shutter Mechanism
  - Brushless DC motor
  - Based on EPIC and Solar-B/XRT
  - Blade diameter: 6.25 in
  - Beam diameter at shutter: 50.8 mm
  - Required life: 32 M operations
  - Repeatability/Uniformity: ±0.1ms/ ±0.5 ms
  - Minimum exposure: 5ms
  - Minimum cadence: 100 ms
    - For narrow slot or medium slot exposures

Triana/EPIC Shutter mechanism

Mechanism Requirements (3 of 3)

- Filter wheel mechanism
  - Brushless DC motor with 5 positions
  - Based on SXI & Triana/EPIC filterwheel
  - Filter aperture diameter: 55 mm
  - Required life: 32 M operations
  - Max operational time: 1s between adjacent positions
  - Position accuracy: ±2 arcmin

Triana/EPIC Filterwheel mechanism

- Aperture selector (in 193/211 channel)
  - Brushless DC motor/half shade
  - Move time: 1 s
  - Required life: 32 M operations
  - Position accuracy: ±15 arcmin
  - Blade diameter: 8.3 in

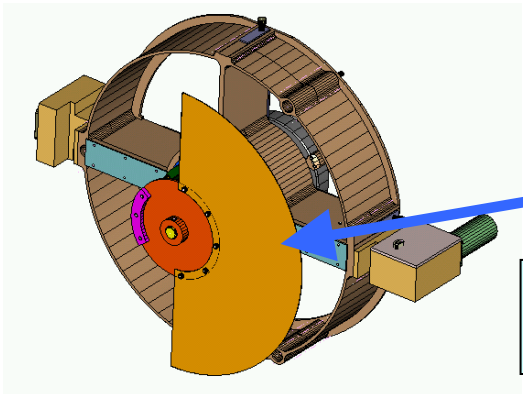

Aperture Selector Design

AIA System Requirements

Science questions determine the top level system properties.

1. Field of View (FOV) and Pixel Size
2. Spatial Resolution
3. Temperature Coverage
4. Cadence
5. Dynamic Range
6. Guide Telescope

The system properties flow down to the component properties.

1. Filters, coatings, and detector
2. Mechanisms
3. **<u>Image Stabilization System</u>**
4. Electronics and Software

Image Stabilization System

- Requirements derived from
  - Exposure time
  - Angular resolution requirement
  - Spacecraft jitter performance

- Will control spacecraft jitter performance and ISS performance in MRD

- Design is based on TRACE (and STEREO/SECCHI)
  - Secondary is activated with three PZTs
  - Error signal provided by guide telescope

SECCHI/EUVI active secondary

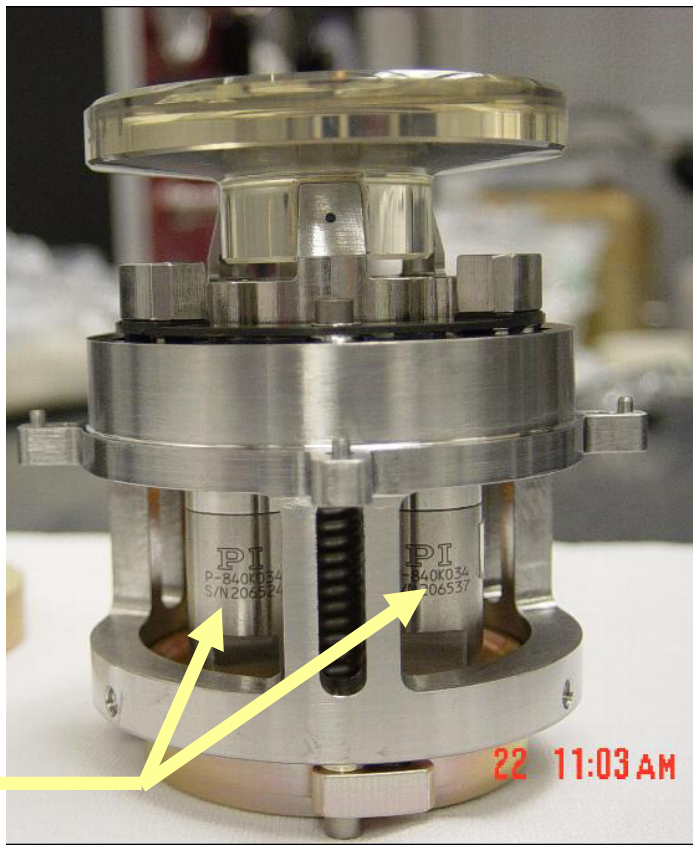

PZTs

GT Linear Range

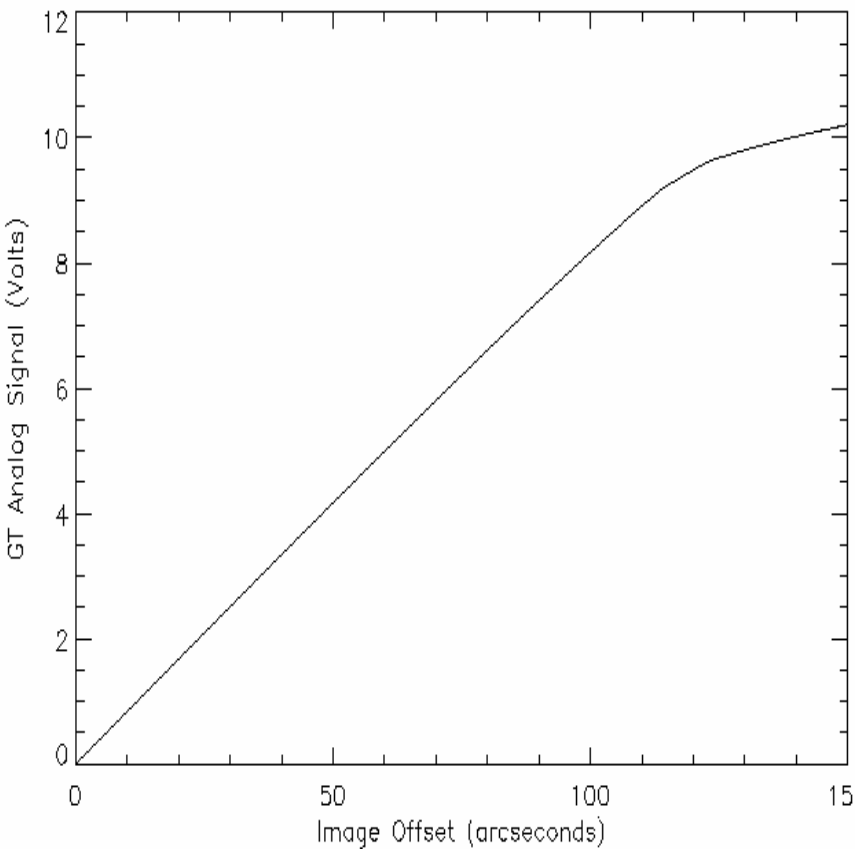

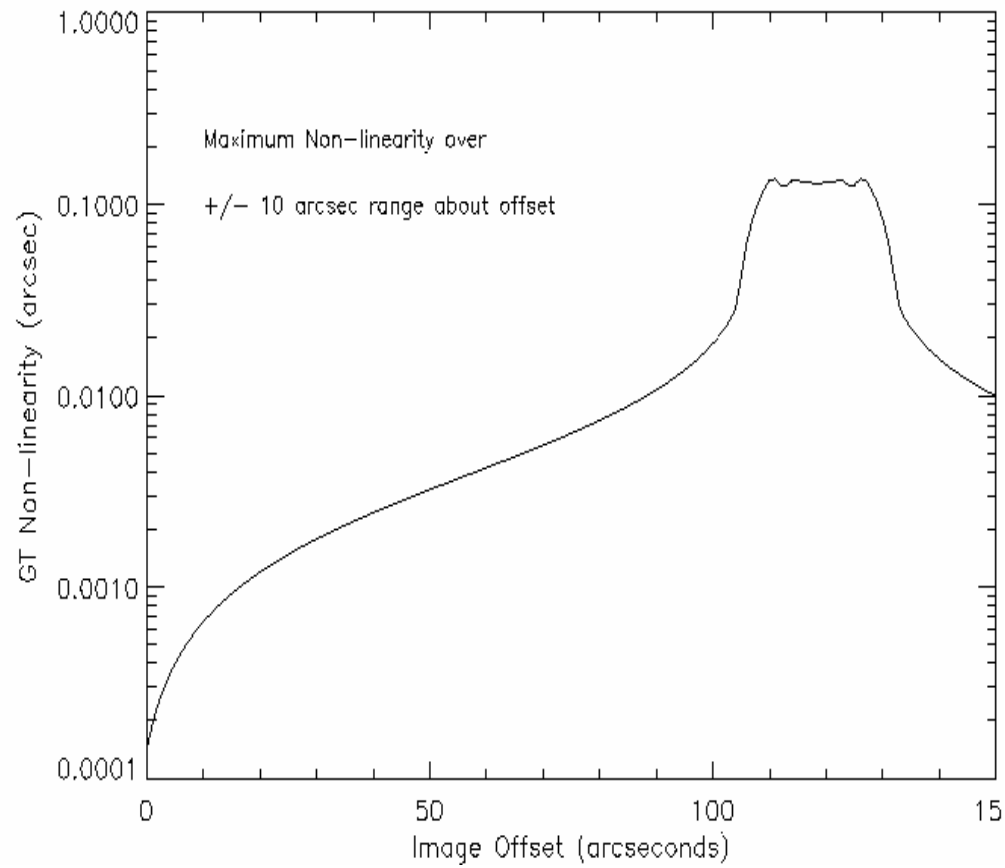

- The GT error signals are linear to high accuracy, as long as each diode has some sun and some dark sky on it
  - So sensor geometry (fixed) and solar diameter (varying) determine the linear range
- Linear operation for both S/C ACS control and image stabilization is possible out to offsets of ~ 95 arcseconds, with scale factor (arcsec / DN) somewhat dependent on offset

Measured TRACE GT Performance

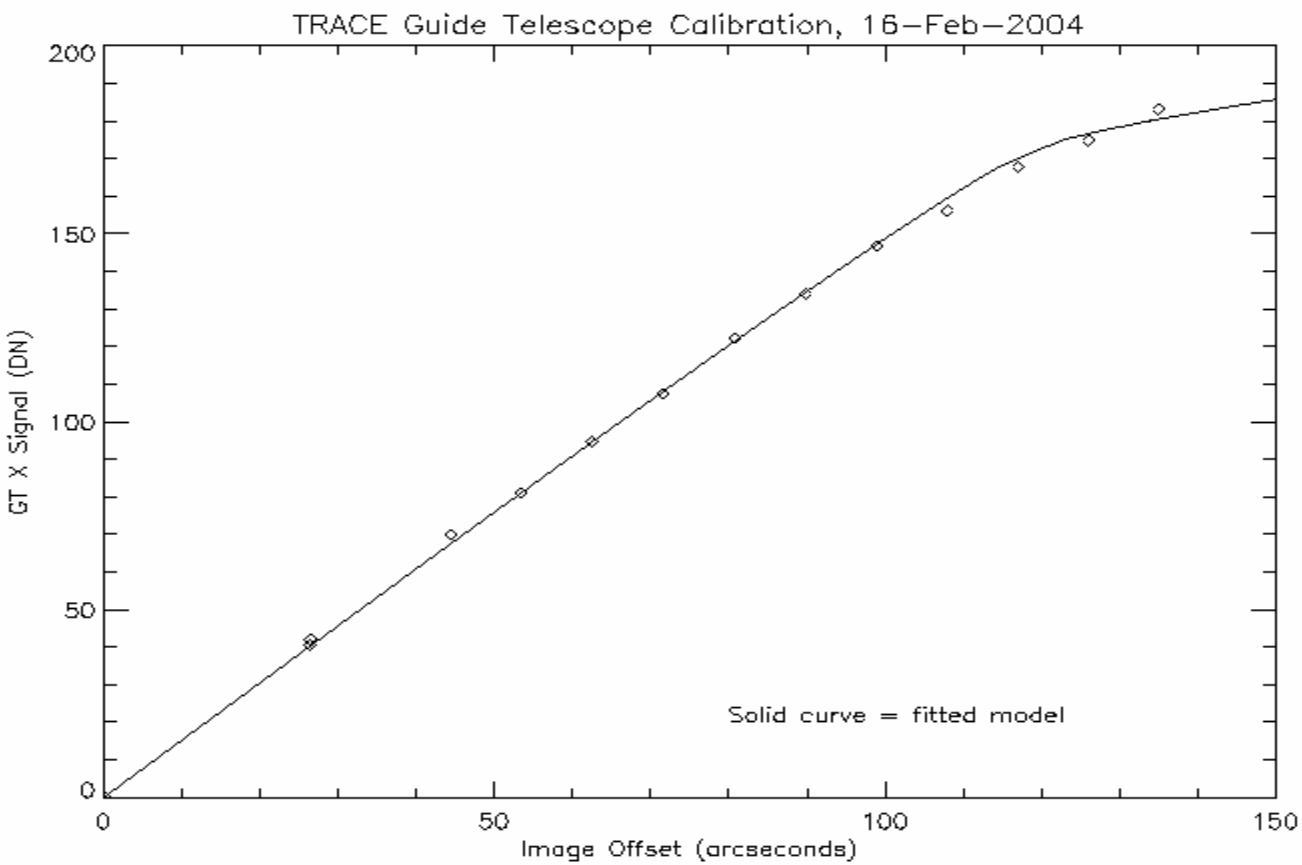

- Special measurement over full range in one axis was done Feb 16, 2004
  - Non-linearity somewhat less in measurement than in model
- Diode intensity levels and scale factors have been measured throughout the five year mission: no long term trends seen, just small seasonal variations

Jitter Requirements

- The AIA Blur Jitter shall be less than 0.17 arcseconds (1-sigma in each axis)
  - This ensures the angular resolution of the telescope + detector is achieved in the AIA images
  - This requirement was derived from consideration of predicted resolution of the Science Telescope, CCD pixel size, charge spreading in CCD, and consistency with the HMI requirement
- "Blur jitter" is calculated using the following equation:

$$\text{Blur (1-sigma)} = \left[\int_{-\infty}^{\infty} PSD(\omega) * \left| ATF(\omega) \right|^2 * \left[1 - \sin c^2(\omega\tau) \right] \mathrm{d}\omega \right]^{1/2}$$

ATF = Attenuation Transfer Function of ISS

PSD = Two-sided Power Spectral Density of the input jitter at the instrument mounting interface

ω = Frequency in Hz

τ = Exposure Time in seconds

Jitter Weighting Function

$W_j = 1 - \mathrm{sinc}^2(\omega\tau)$ = Weighting Function for RMS Blurring Formula

Use longest exposure time to include low frequency jitter

τ = 3 sec
1/ τ =0.33 Hz

All frequencies above ~ 0.05 Hz contribute to blurring

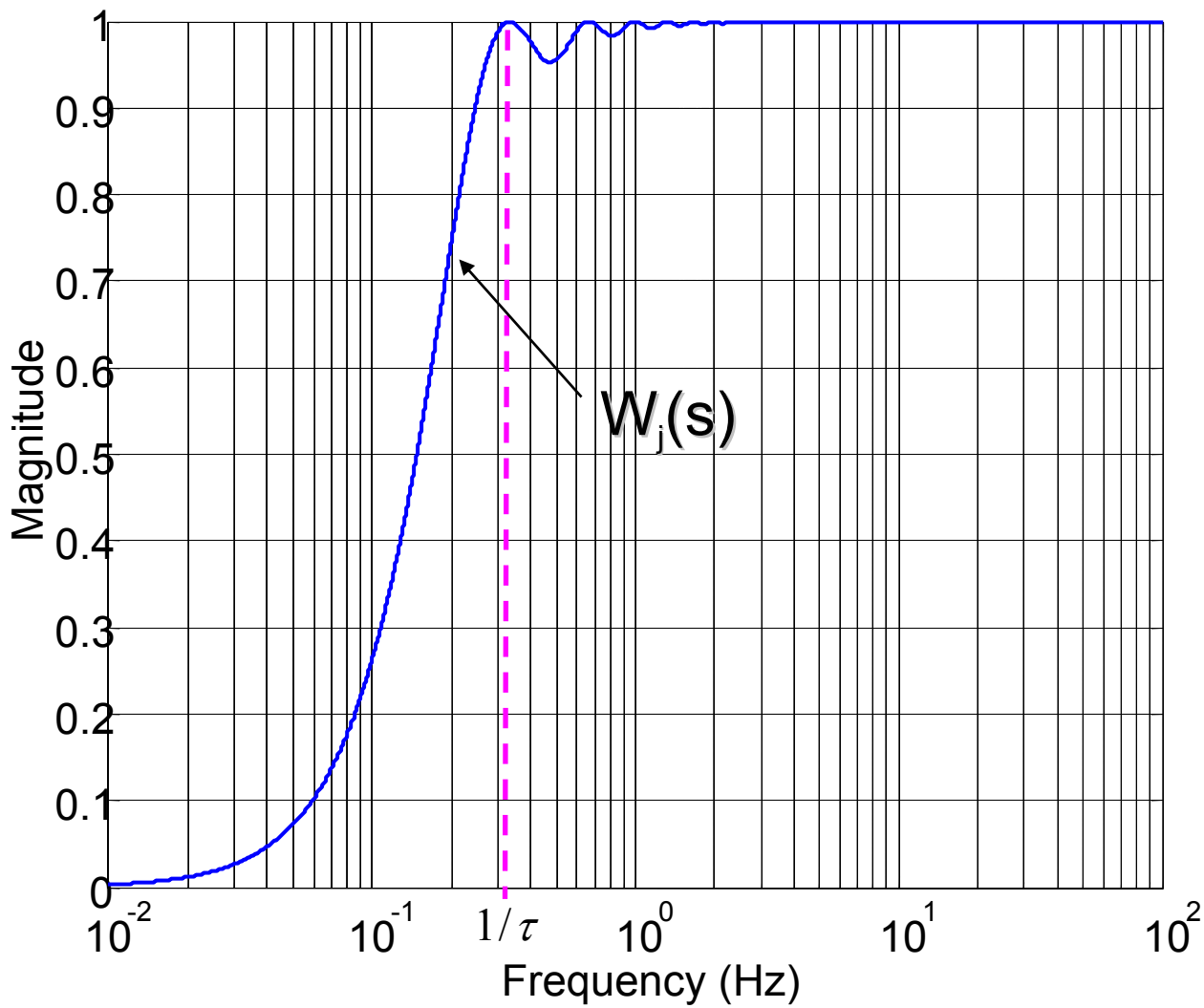

Preliminary Jitter Attenuation

- The AIA ISS is open loop: the PZT tilt mirror does not move the image in the GT
- Therefore, the jitter attenuation depends critically on the calibration of PZT volts needed per volt of GT error signal
- The plot show results for various % errors in this calibration, for the TRACE transfer function
- Based on TRACE, - 4 % calibration error is a conservative value to use for jitter analysis
- MRD transfer function is slightly more conservative than this (.06 not .05 at DC)

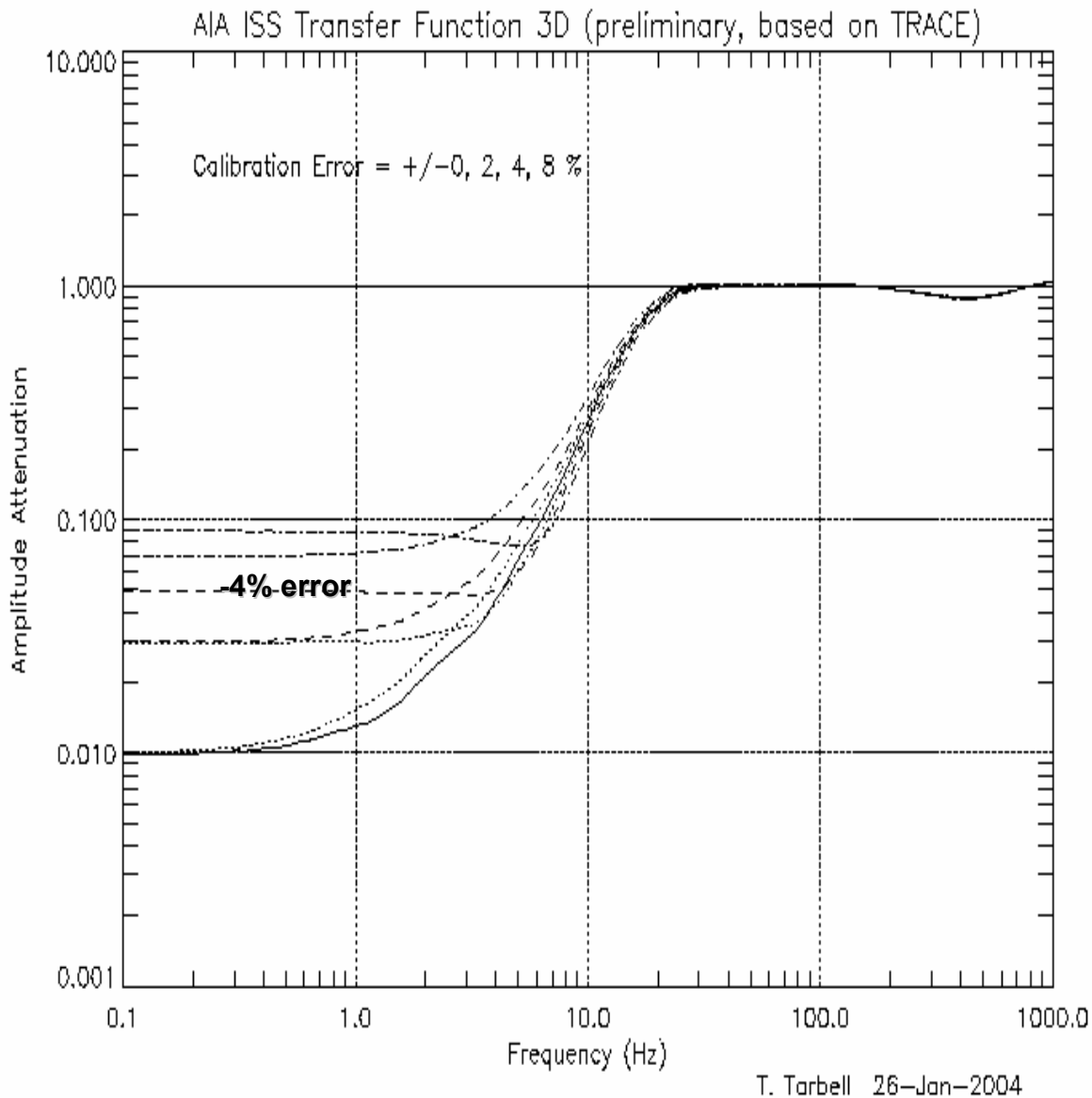

AIA System Requirements

Science questions determine the top level system properties.

1. Field of View (FOV) and Pixel Size
2. Spatial Resolution
3. Temperature Coverage
4. Cadence
5. Dynamic Range
6. Guide Telescope

The system properties flow down to the component properties.

1. Filters, coatings, and detector
2. Mechanisms
3. Image Stabilization System
4. **<u>Electronics and Software</u>**

Key Electronics and Software

- The AIA science data shall not exceed of maximum data rate allocation of 67 Mbps over the IEEE 1355 high rate science data bus
  - Requires the use of some data compression

- Electronics and software must provide observational sequence control
  - AIA science objectives require specific sequences (cadence, FOV, exposure time) to obtain appropriate observables

- Observing sequences must be configurable
  - To react to changing solar conditions
  - Expect weekly to daily operations
  - Automatic exposure control must be provided

Electronics and Software Design

- Data Compression
  - Will be provided using reconfigurable look-up tables
  - Square root binning (SRB) provides lossy compression
    - Amount of compression can be adjusted through updates to look-up tables
    - Multiple tables implemented to tune compression on a channel-by-channel basis
  - RICE (lossless) compression achieves 4.5 bits/pixel on 171Å TRACE images
  - SRB + RICE achieves 3.5 bits/pixel on 171Å TRACE images
  - Average SRB + RICE on all AIA images (including UV) is 3.7 bits/pixel
    - Provides a margin of 18% if telemetry allocation is limited to 58 Mbps
    - Increased allocation to 67 Mbps will improve data quality (requires less aggressive SRB algorithms)

- Automatic Exposure Control (AEC)
  - Based on TRACE design
  - Adjusts exposure time to account for changing solar intensity
  - In 133Å channel (Fe XX, XXIII) can control filterwheel for additional attenuation

AIA Electronics Boxes

AIA Electronics Box (AEB)

- Basic layout similar to HMI
- Connectors will be on the long side
- Connectors shown are notional

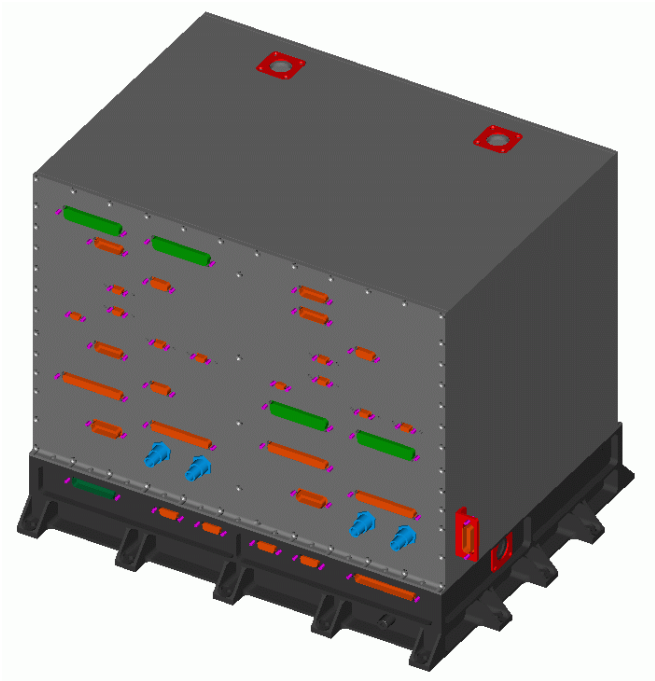

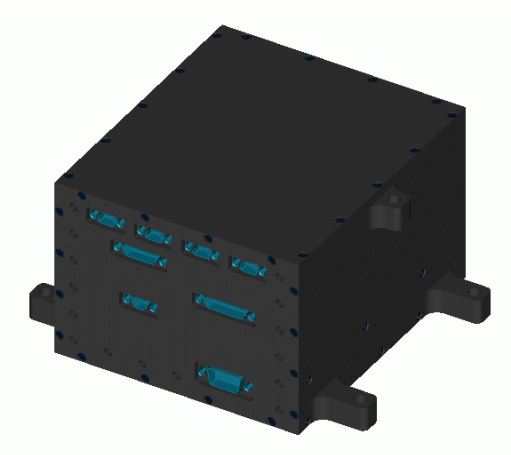

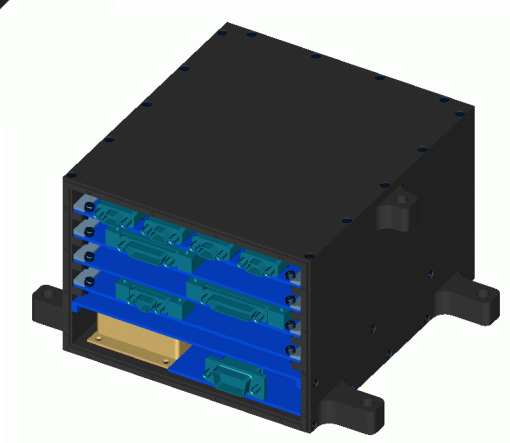

AIA Camera Electronics Box (CEB)

- Identical to HMI
- Mounts to IM behind science telescope focal plane assembly

AIA Block Diagram

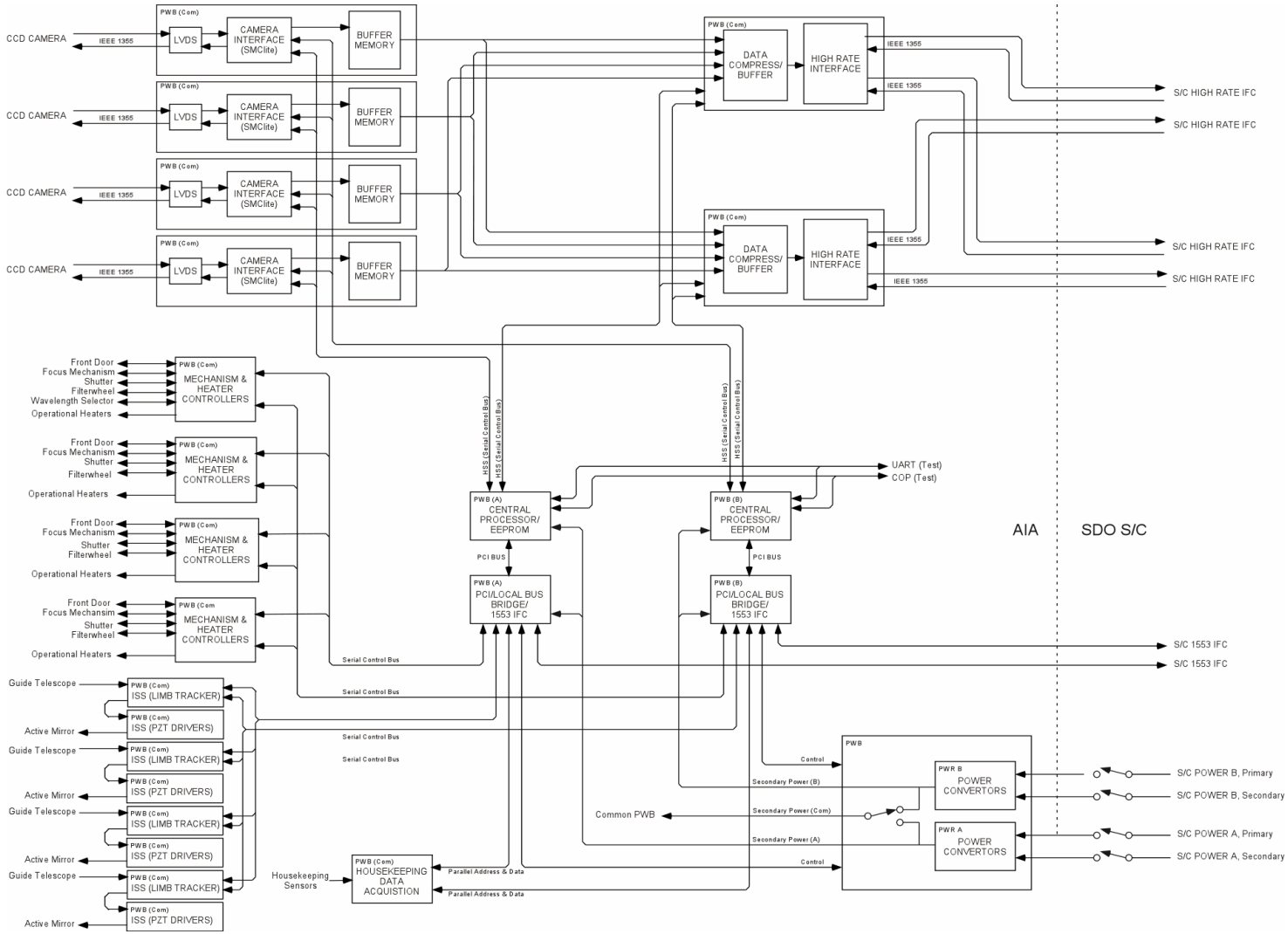

Joint HMI/AIA SOC

- Common aspects
  - Commanding
  - data capture
  - Level-1
  - Export
  - Location
- Unique requirements
  - HMI Higher Level Helioseismology Data Products
  - AIA Visualization and Solar Event Catalog

Data Management Requirements

- HMI data volume and processing requirement
  - Raw data – One 4kx4k image each 2 seconds
  - Level-1 – set of 10 (V) or 20 (**B**) images to make observable
  - Higher Level Data Products – Projections, time-series, transforms, fits, and inversions to arrive at inferences of physical conditions in solar interior
  - Heritage - Similar to SOHO/MDI and NSO/GONG. All higher level products now exists as research tools. Complexity of data types very similar. Data organization the same. User community the same. Data export requirements expected to be similar in complexity and number but data volume will be larger.
- AIA data volume and processing requirement
  - Raw data volume – Eight 4kx4k images each 10 seconds
  - Level-1- Flat field and spike removal
  - Visualization – Long range coupling of active region scale processes
  - Solar Event Catalog – list of transients to enable “observing the archive”
  - Heritage– Similar to TRACE and SOHO/EIT. Complexity of data types very similar. Data organization the same. User community the same. Data export requirements expected to be similar in complexity and number but data volume will be larger.

Mission Data Flow Block Diagram

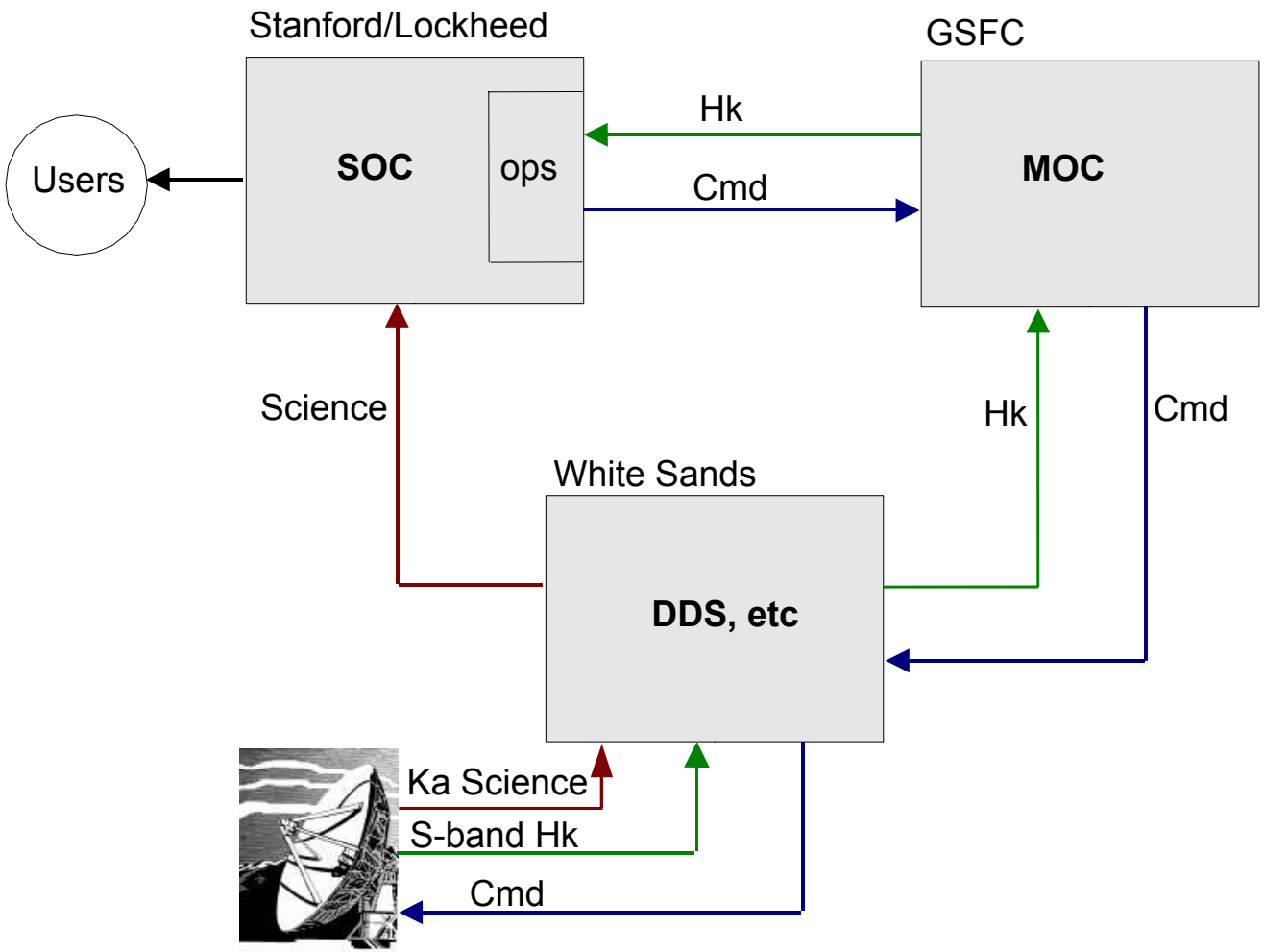

JSOC Data Flow

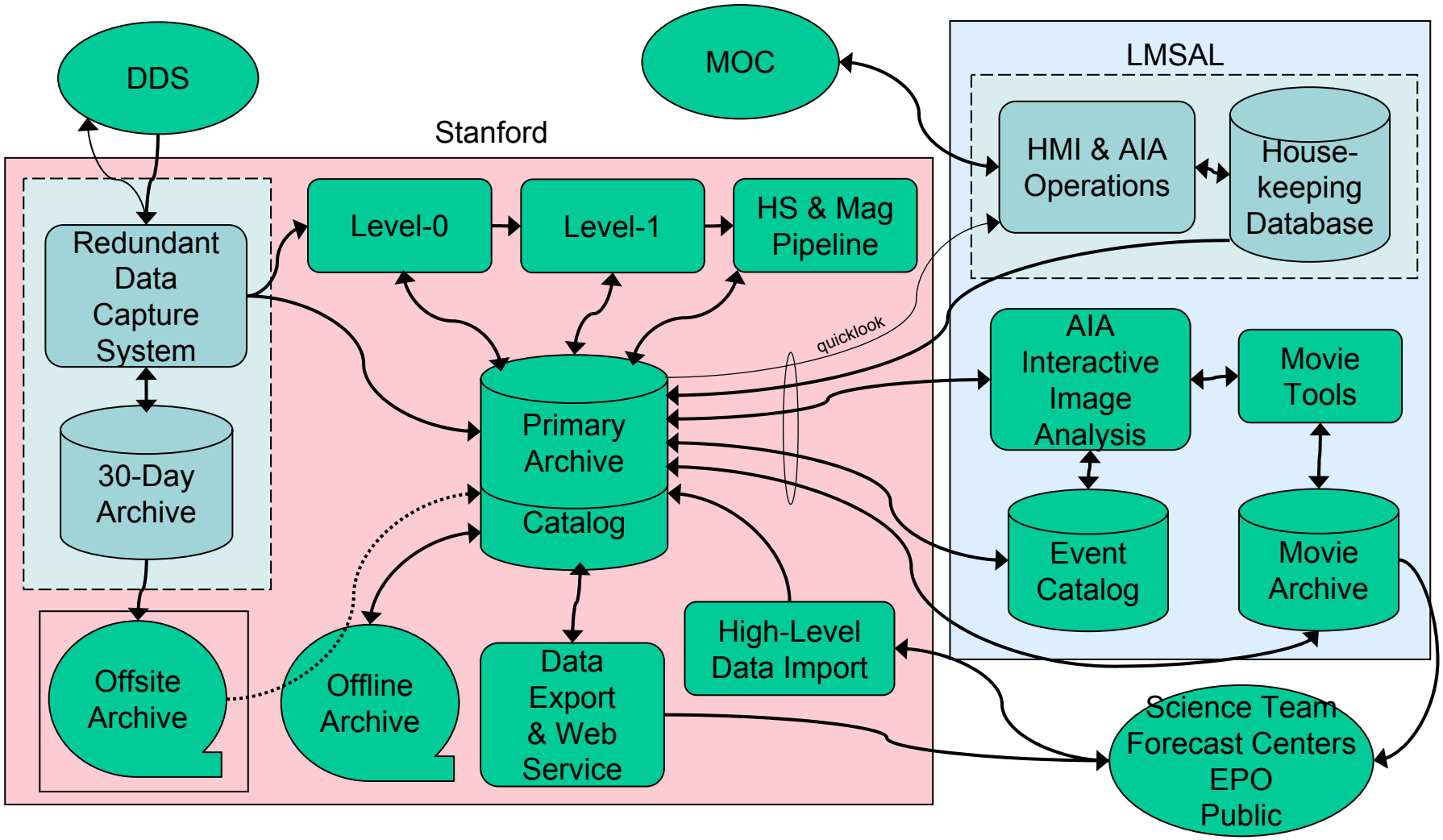

Components AIA Science Operations

- Health and Safety of AIA Instrument
  - Monitored via a pair of workstations
- Spacecraft Commanding for Normal Operations
  - Done only occasionally ~ weekly
- Production of Quick-Look Data
  - Web based survey page with movies and science data in near real time
  - Catalog data
    - Automatic recognition
    - Ancillary data from other sources e.g. GOES, ACE, STEREO, Solar B, GB Observatories
    - Visual event recognition by quick-look observers
    - Surveys from Visualization Center
- Production of Reference Data
  - DEM Maps
  - Potential Field Maps (from HMI)
  - Force Free Field Maps (from HMI)
- Support of Data Access
  - Web pages to access data and request specific processing
  - Maintenance of Data Archive Catalog

JSOC Implementation - AIA Component

- Instrument MOC (JMOC) - *Monitors Heath and Safety and Sends Instrument Commands*
  - Hardware and software developed by LMSAL as operational GSE for test and integration of HMI and AIA
  - Responsible for Instrument commanding, operations, health and safety monitoring
  - Development based on previous missions (SOHO, TRACE,SXI, FFP) GSE development
  - Minimal operations commands sent only for software uploads, calibration, and occasion operational mode selection
- Science Processing Center - *Provides Data for Scientific Analysis and Quick Look*
  - All computers, disk drives, and tape libraries in single computer system
  - AIA Quick look and calibration software developed by LMSAL based upon existing TRACE systems
  - Some software for special science products developed by Co-I's and foreign collaborators.
  - Catalog uses formats developed for VSO and EGSO
  - AIA CPU Processing task approximately 160 times that required for TRACE
  - AIA On-line disk storage estimated 270 Terabytes.
  - On-line data available on Web in near real-time at two web sites
  - 2500 Terabyte Archive on robotic tape libraries for access to entire mission data base
  - Archive Data available via web request typically in less than 24 hours

AIA Data Flow

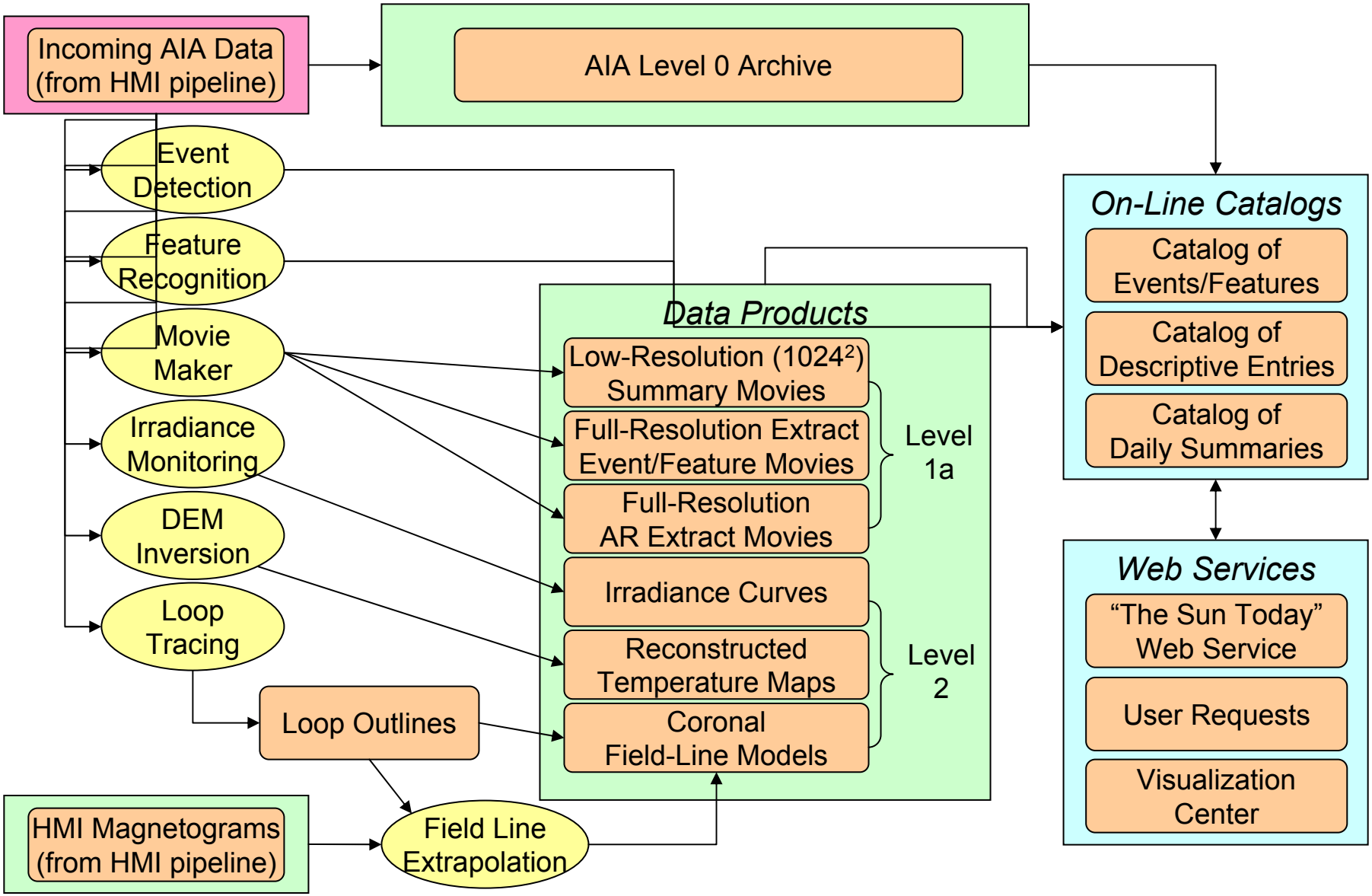

AIA Data Flow Block Diagram

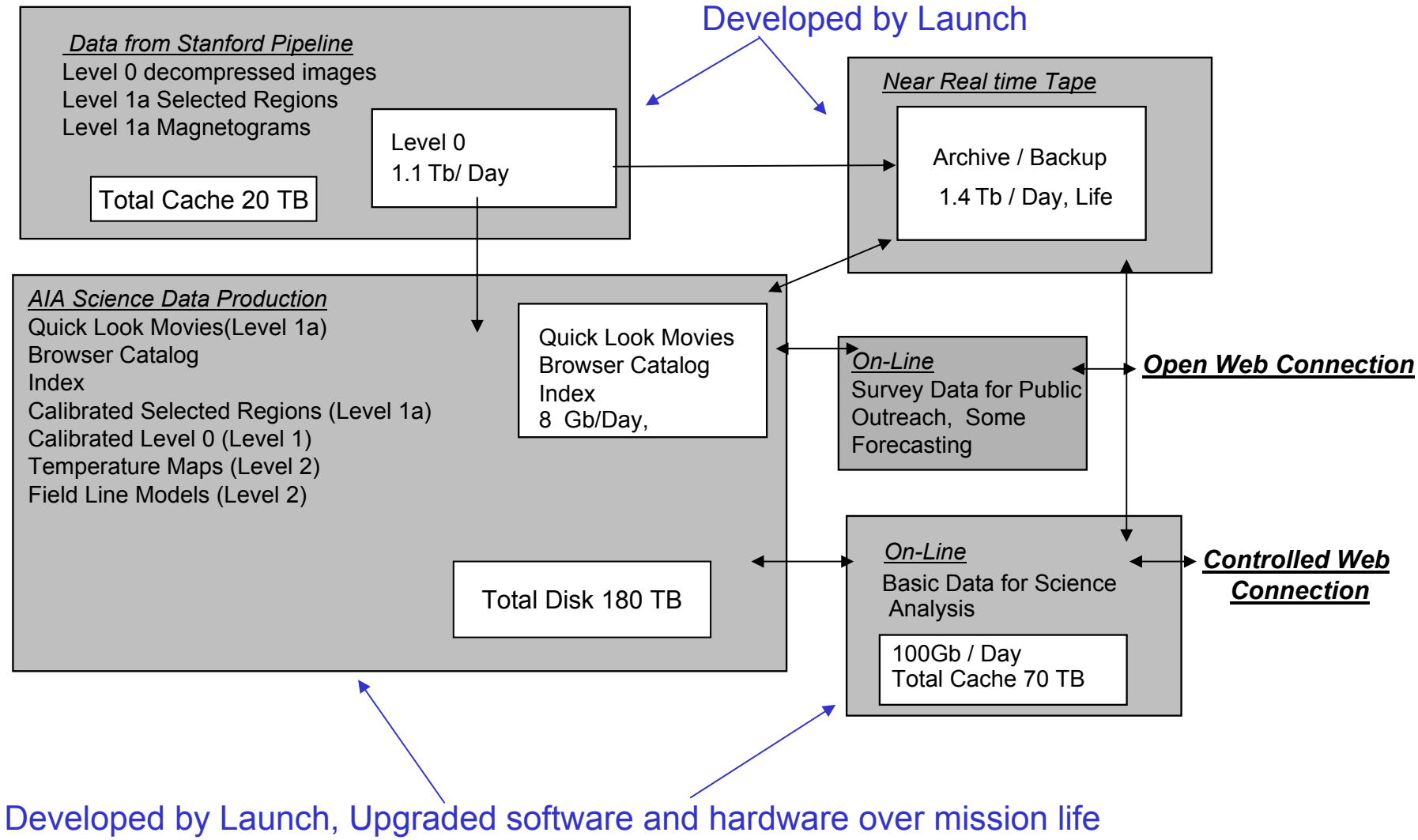

Estimate of Quick-Look and Basic Science Data

- FD Movies - 0.73 Mbits
  - 10 frame/minute movies in all AIA wavelengths
  - 1 frame/minute of line of sight magnetograms
  - 1 frame/minute Loop Movie (overlay of AIA images)
- Flat Field Corrected, Despiked, MTF corrected Data Sets of 8 5x5 arc minute Active Regions - 3.15 Mbits
  - 12 bit Science Data
  - 8 5 x 5 arcminute regions on Sun
  - 8 images/sec for all regions from AIA
  - A loop composite from AIA
  - A line of sight magnetogram from HMI every minute
- On-line Storage Requirements for Quick Look and Basic Science Data - 5.73 % Total Data
  - Daily 42 Gigabytes
  - Yearly 15.3 Terabytes
- One-line Storage for Level O data
  - Daily 723.6 Gigabytes
  - Monthly 21.7 Terabytes

Quick-Look - What We are Doing NOW

- Quick-Look Page “The Sun Today”
  - Available at http://www.lmsal.com/solarsoft/last_events/
- Last Events Provides:
  - Single images in all available EIT, SXI, TRACE data
  - GOES X ray flux
  - GOES Proton flux
  - Bulk Solar Wind Speed
  - List of Events
- List of Events Provides:
  - Links to other data sets
  - Film strips and movie access
- Film Strips Provides:
  - Event Movies
  - Context Movies
  - GOES Flux

Forecasting System Exist

- Forecasts and Documentation Exists at http://www.lmsal.com/forecast/
- Magnetic Field Forecasts uses:
  - Current full disk MDI magnetograms
  - Acoustic maps of back side of Sun
  - Knowledge of magnetic spreading over solar surface
- Models Predictions based upon:
  - Potential field calculations of magnetic field
  - Gradients in field structure
  - Properties of Heliosphere