Mars Atmosphere and Volatile Evolution Mission (MAVEN)

Community Meeting
Sunday, December 2, 2012

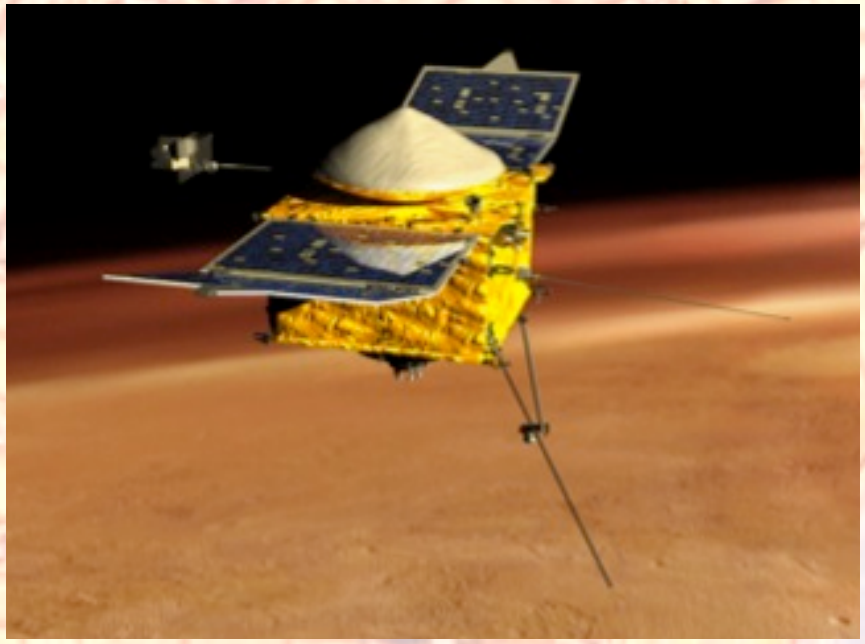

Magnetometer Investigation (MAG)

Jack Connerney et al.

MAG: Magnetometer Outline

Science

- Science Goals of the Magnetometer Investigation
- Mars Environment
- Science Requirements and Support for Particles and Fields Package (ions, electrons, energetic particles & waves).

Instrument

- MAG as Part of the PFP Package Integrated at UCB.
- A Heritage Mario Acuña Fluxgate.
- Instrument Performance and Calibration History.

Spacecraft Accommodation

- Magnetic Cleanliness Program to meet Science Requirements
- Illustration of Solar Array Compensation and Verification.

Data Processing and Archive Data Sets

- Data Processing Pipeline
- Data Products, Accessibility,

MAG: Magnetometer Investigation

What are MAG goals ?

- Measure vector magnetic field
- Characterize solar wind interaction
- Support particles and fields package (ions, electrons, energetic particles & waves).

Where ?

- Every orbit reaches below ~ 400 km at periapsis;
- "deep dips" probe to ~ 125 km.
- Mission design provides broad coverage of solar wind and interaction regions (sheath, pileup region, wake).

Why ?

- Together with other MAVEN instruments to **understand present and past atmospheric loss**

MAG Team:

Jack Connerney, Jared Espley, Dave Sheppard, Ron Oliversen, Jim Odom, Scott Murphy, Pat Lawton, John Hawk, Haydee Aguilar, Steve Himes & GSFC engineering support.

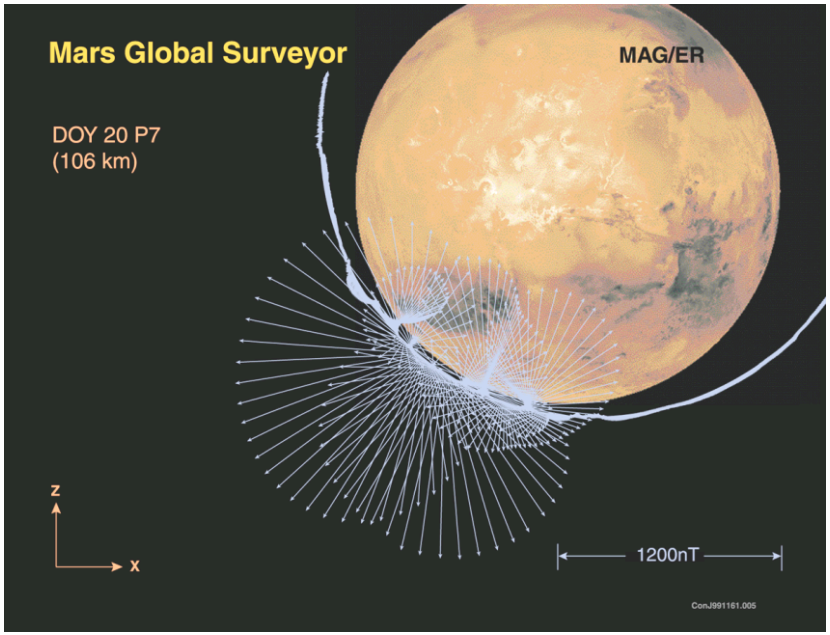

MAG: Deep Dip Environments

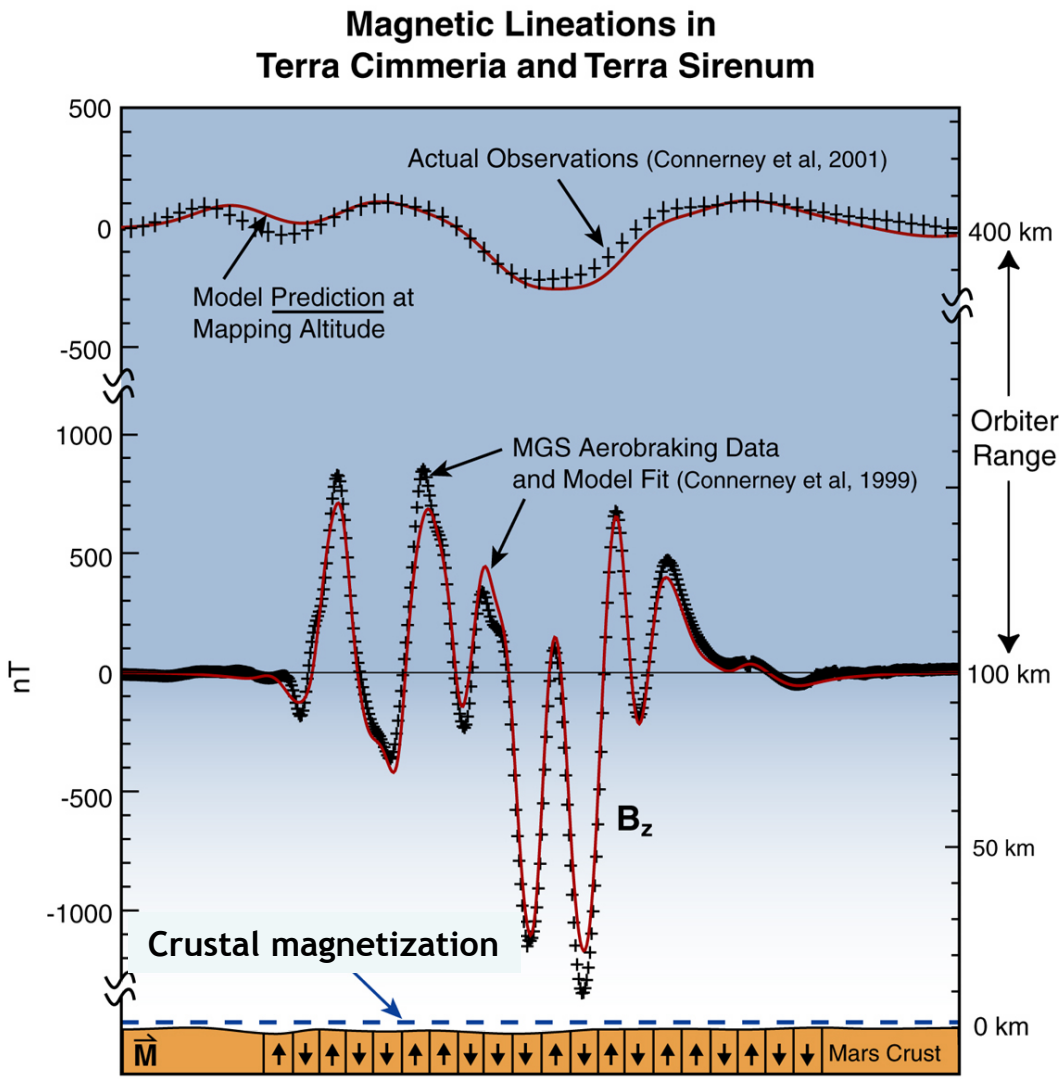

MAVEN probes the Mars atmosphere throughout the volume accessible to orbiting spacecraft.

Crustal magnetic field variations produce ***"mini-magnetospheres"*** that influence the atmos-pheric interaction with the solar wind.

MAG: Mini-Magnetospheres

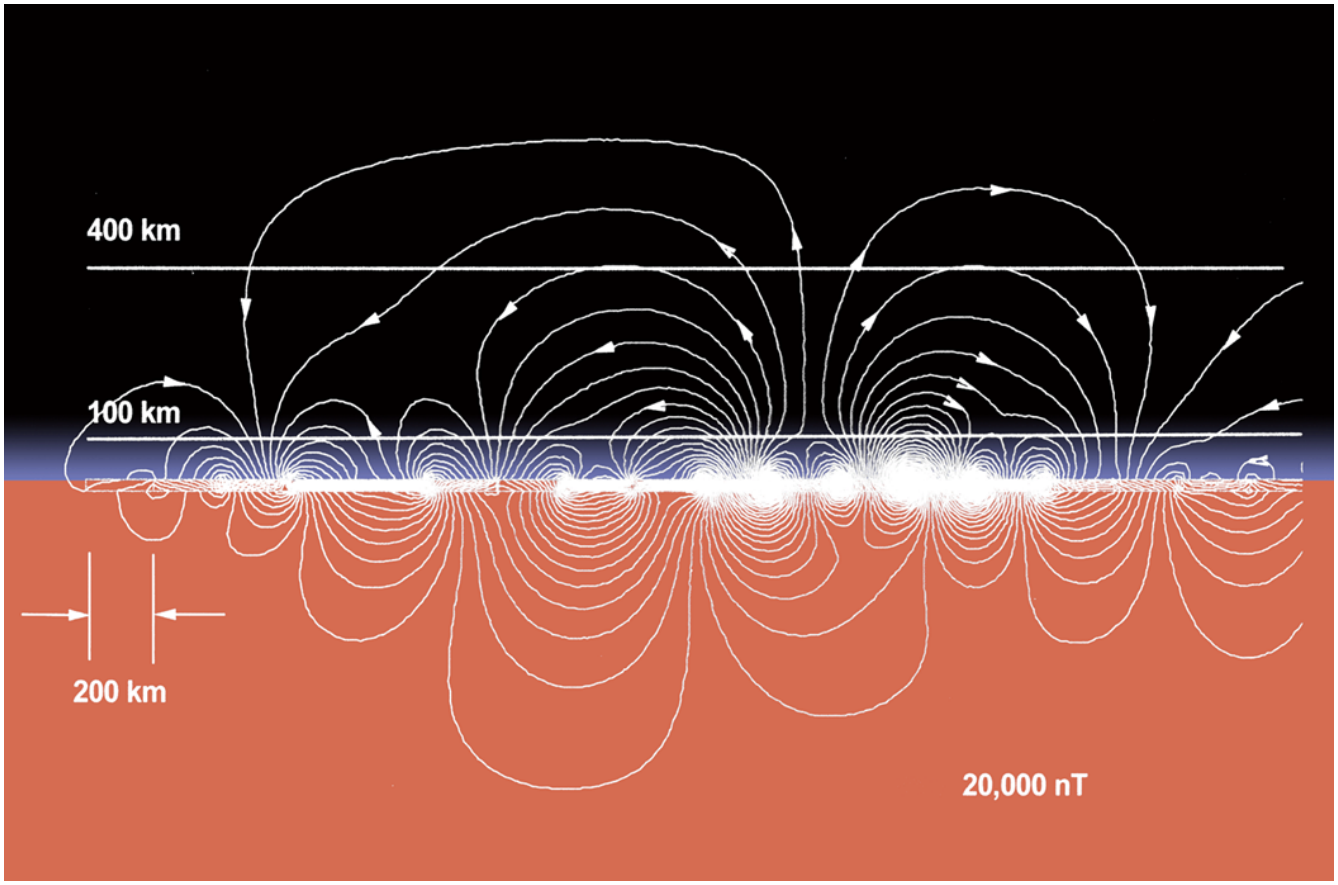

Complicated geometry of Martian "mini-magnetospheres" formed by crustal magnetic anomalies.

- Day/night asymmetry in solar wind interaction, magnetic environment.
- Variability with solar input, particularly variations in solar wind ram pressure.
- How do the "mini-magnetospheres" influence loss of volatiles? Geologic ***history***?

GSFC - Magnetometer

Mars: A Lumpy Obstacle to SW

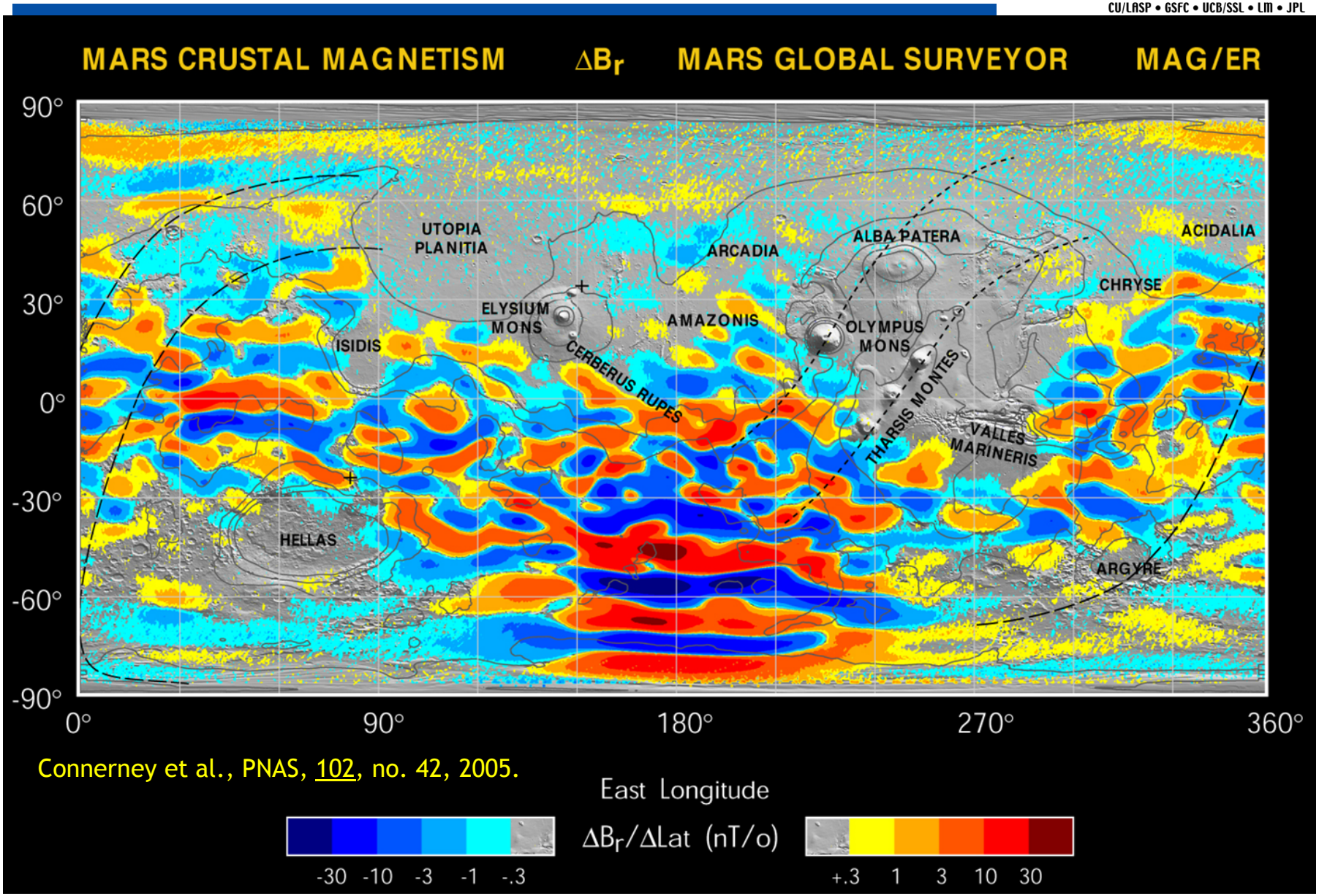

Connerney et al., PNAS, 102, no. 42, 2005.

MAG: Driving Requirements

MAVEN Mission Requirements Document, MAVEN-PM-RQMT-0005
MAVEN Level 3 Functional Requirements – Particle & Fields FRD, MAVEN-PFIS-RQMT-0016
MAVEN Magnetometer Level 4 Functional Requirements Document, MAVEN-MAG-RQMT-0061

Requirement	Solution	Comment
Measure field magnitude & direction	Vector fluxgate magnetometer. Use heritage design.	Fluxgate is heritage; Acuna design flown on >50 missions.
Measurement dynamic range 3 to 3000 nT.	Three ranges implemented: +/- 512 nT, +/- 2048 nT, +/- 65536 nT	Science team has run comprehensive analyses of mission environments.
Accuracy/Resolution better than 1%	Heritage analog design & 16 bit ADC exceeds requirement	Intrinsic noise is << 1 nT Zero stability is < 1 nT
Timing Resolution of 20 seconds or better	Use PFDPU-provided crystal controlled oscillator & PFDPU-provided spacecraft time.	Timing resolution is much better than one second. Intrinsic sample rate is 32 vector samples/sec, each MAG.
Magnetics cleanliness per MAVEN magnetics cleanliness plan	Screen all electro-mechanical components near the sensor.	Standard MAG lab processes and test equipment.
Hardware Redundancy	Two independent magnetometers, a/c heaters, independent power supplies.	No common electrical connections between magnetometer hardware.
Orthogonality/Alignment	Heritage mechanical alignment knowledge < 0.25 degrees.	MAVEN requirements met without need for optical cube.
Survivial/operational heaters provided by MAG	Proportional AC heater design.	Similar design to RBSP and Juno.

MAVEN Particles & Fields Package

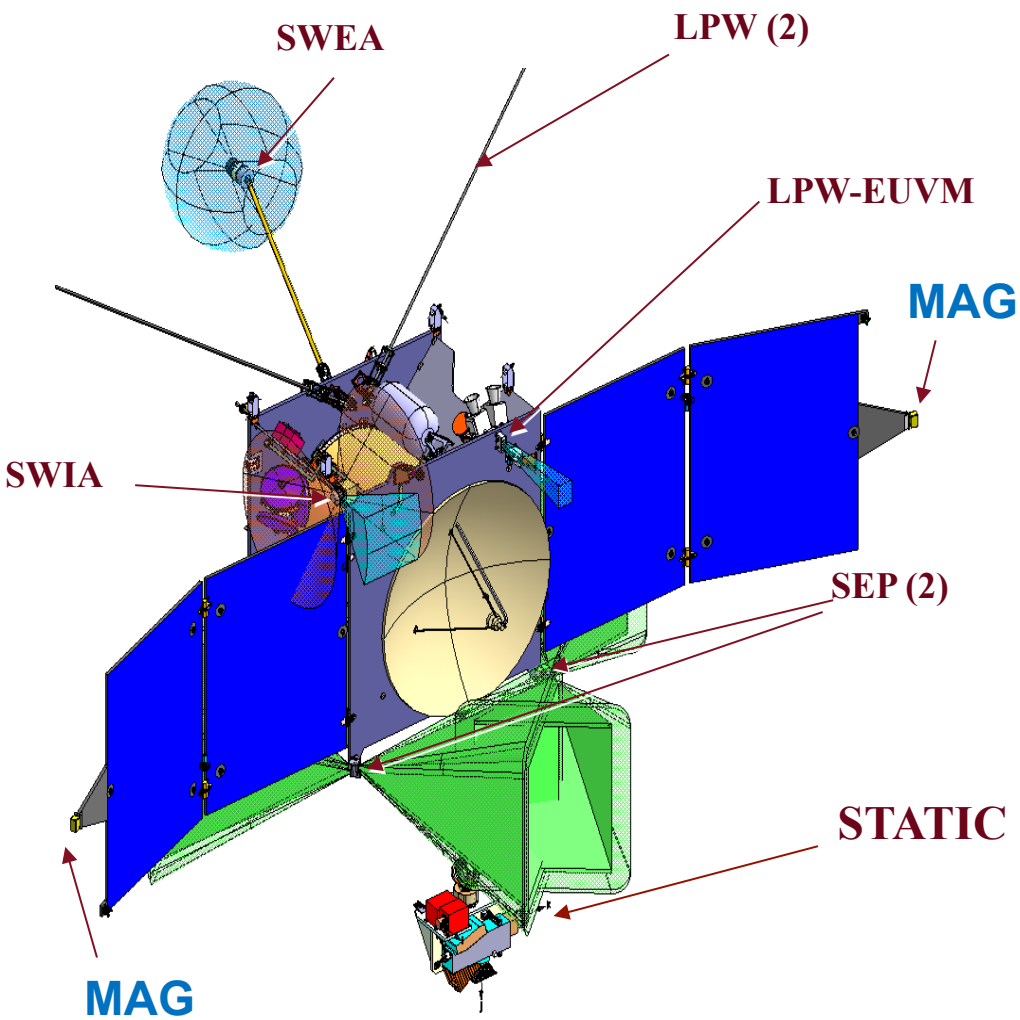

Solar **W**ind **I**on **A**nalyzer (SWIA) – SSL

Solar **W**ind **E**lectron **A**nalyzer (SWEA) – CESR / SSL

Langmuir **P**robe and **W**aves (LPW) – LASP / SSL

LPW/**E**xtreme **U**ltra-**V**iolet (LPW-EUV) – LASP

Solar **E**nergetic **P**article Detector (SEP) – SSL

Magnetometer **(MAG) – GSFC**

Supra-**T**hermal **a**nd **T**hermal **I**on **C**omposition (STATIC) - SSL

MAVEN Particle and Fields Package

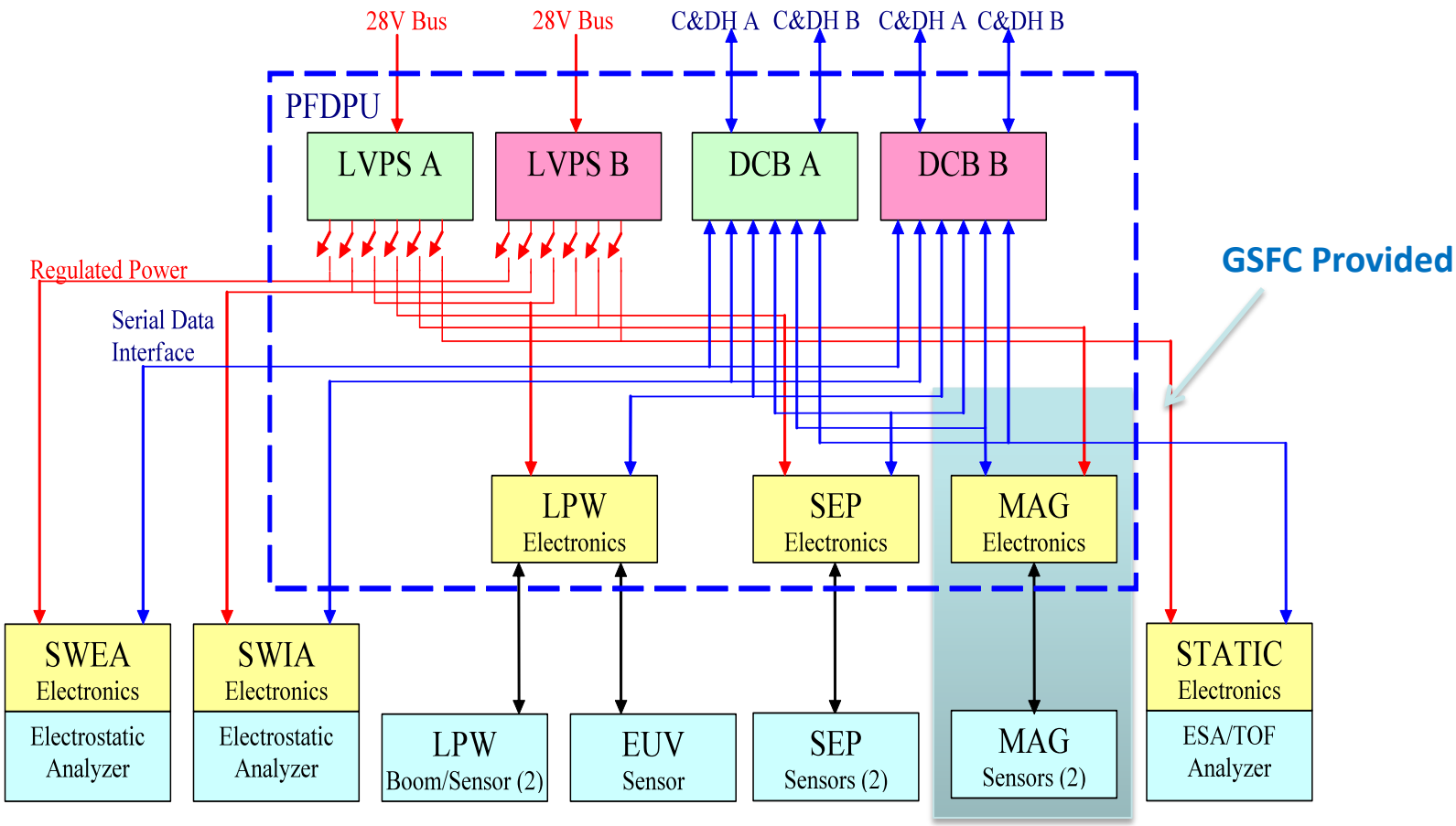

- Two independent MAG sensors, electronics boards and a/c heaters;
- Powered by two independent PFP power supplies.
- Fully redundant hardware configuration.

MAG: Heritage Mario Acuña Fluxgate

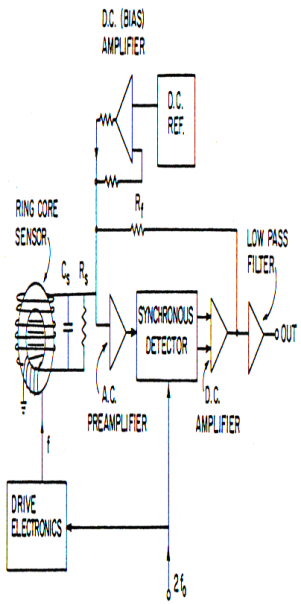

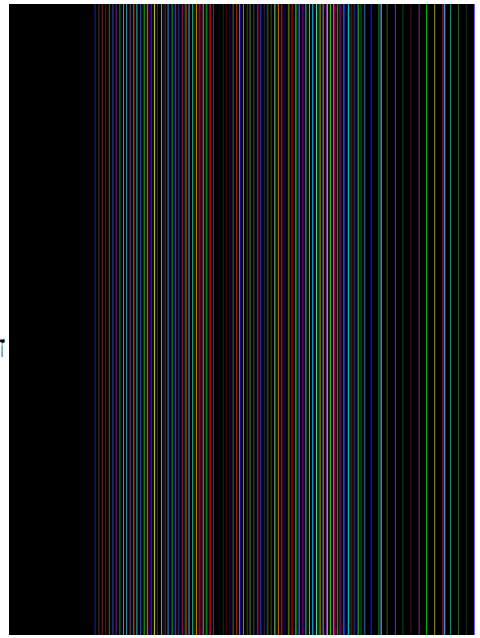

Ring core fluxgate magnetometer (FGM) –> 3 dynamic ranges:

- +/- 65,536 nT
- +/- 2048 nT
- +/- 512 nT

- 0.015 nT resolution (16-bit A/D)

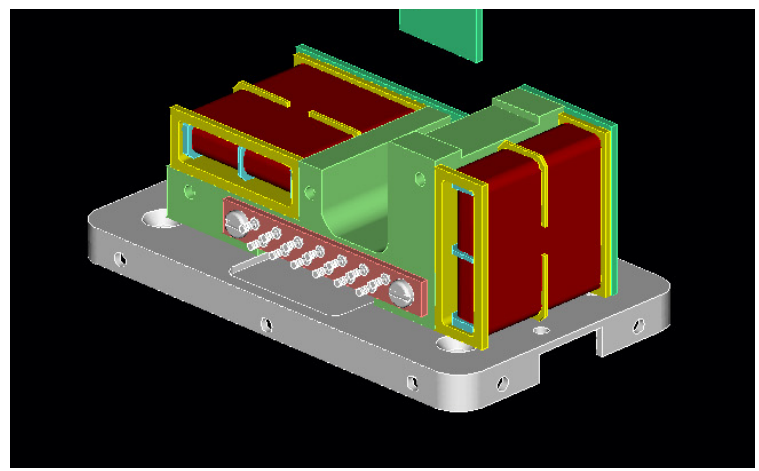

Goddard has flown similar fluxgates for 40 yrs.

MAVEN design is most similar to RBSP w/some Juno features (FPGA control w/ autoranging, housekeeping).

EEE parts are nearly identical to those used on Juno & RBSP (the same lots are being utilized)

Magnetometer Block Diagram

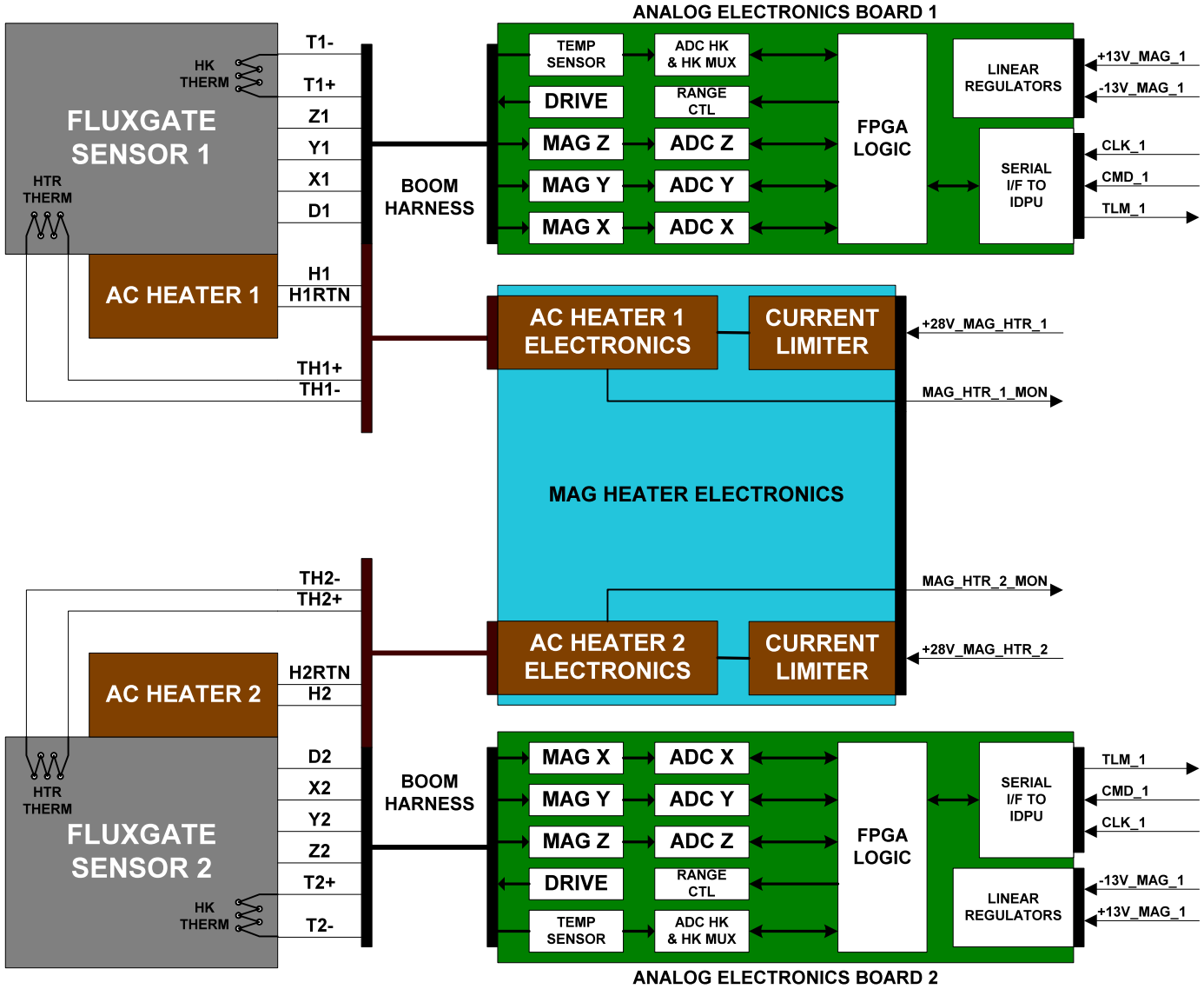

MAG Team Mug Shots

Jack Connerney
Instrument PI

Jim Odom
Senior Technician

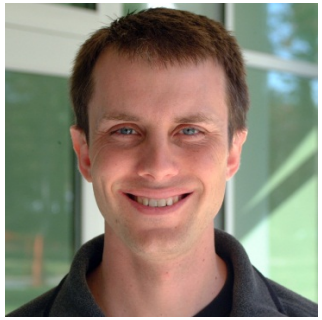

Jared Espley
Science & GSE

Pat Lawton
Ground Systems

Scott Murphy
Mechanical Engineer

Dave Sheppard
Systems Engineer

Ron Oliversen
Instrument Manager

Magnetometer Electronics Slice

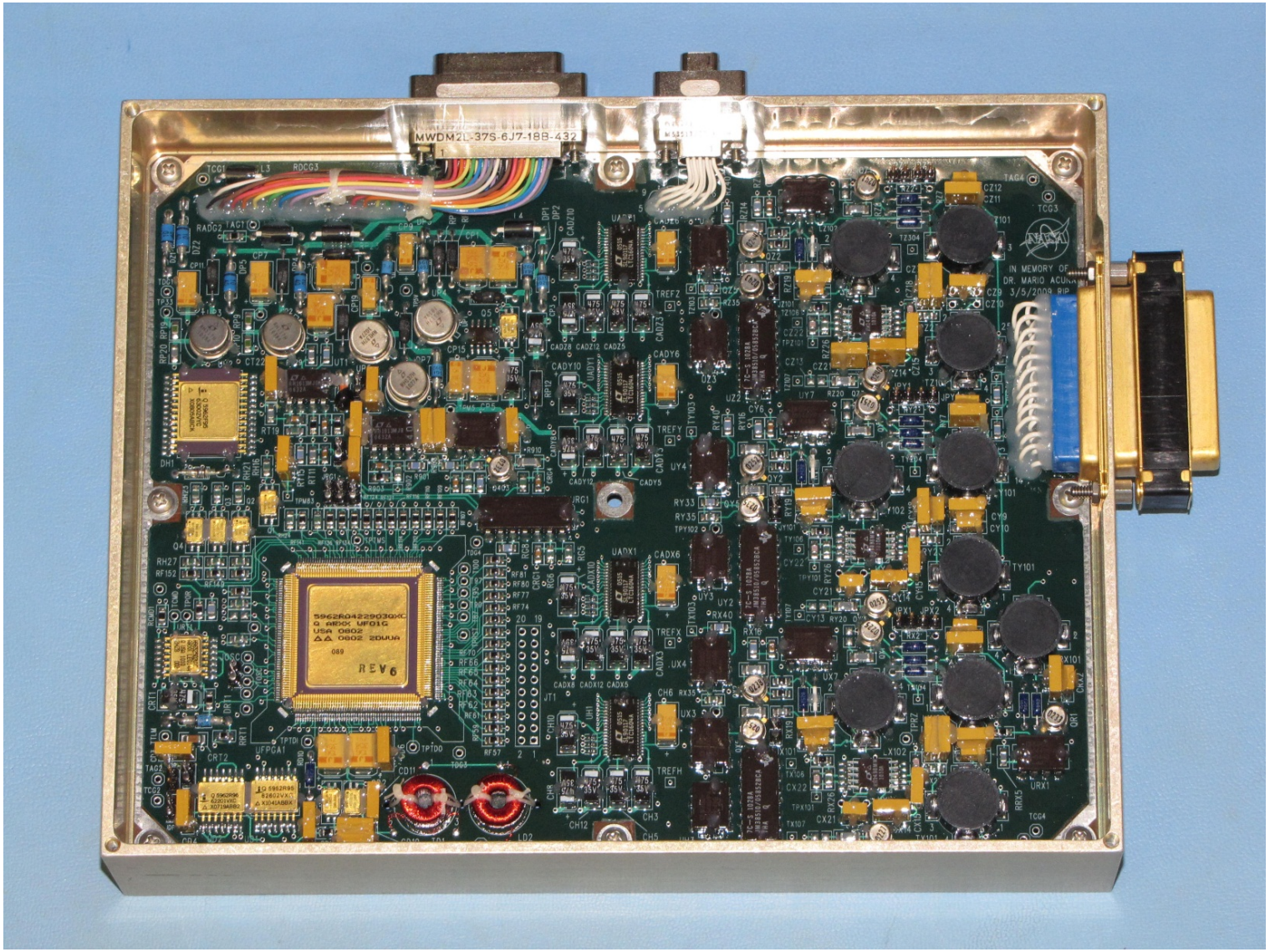

Magnetometer Sensor(s)

FGM FM Sensor

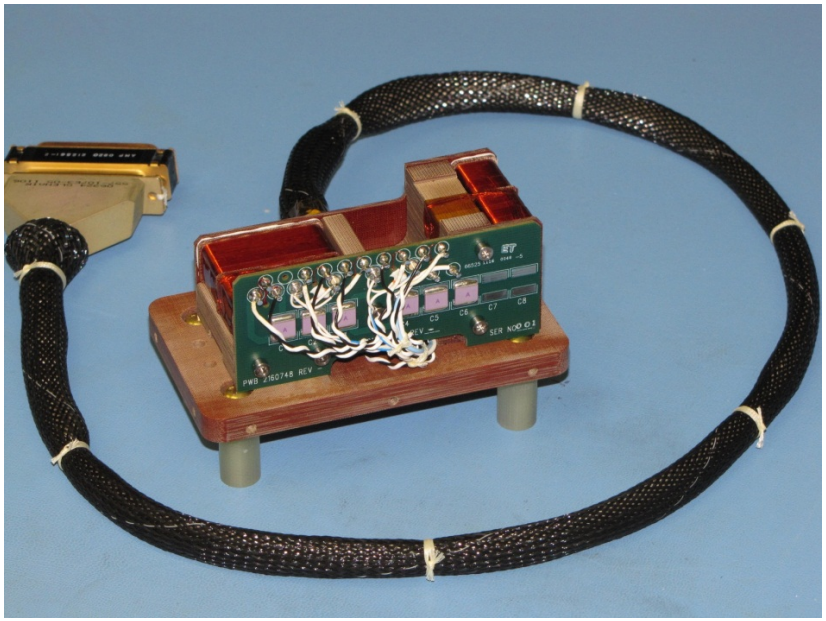

FGM Sensor – inside the box

MAVEN Mag Sensor and Bracket

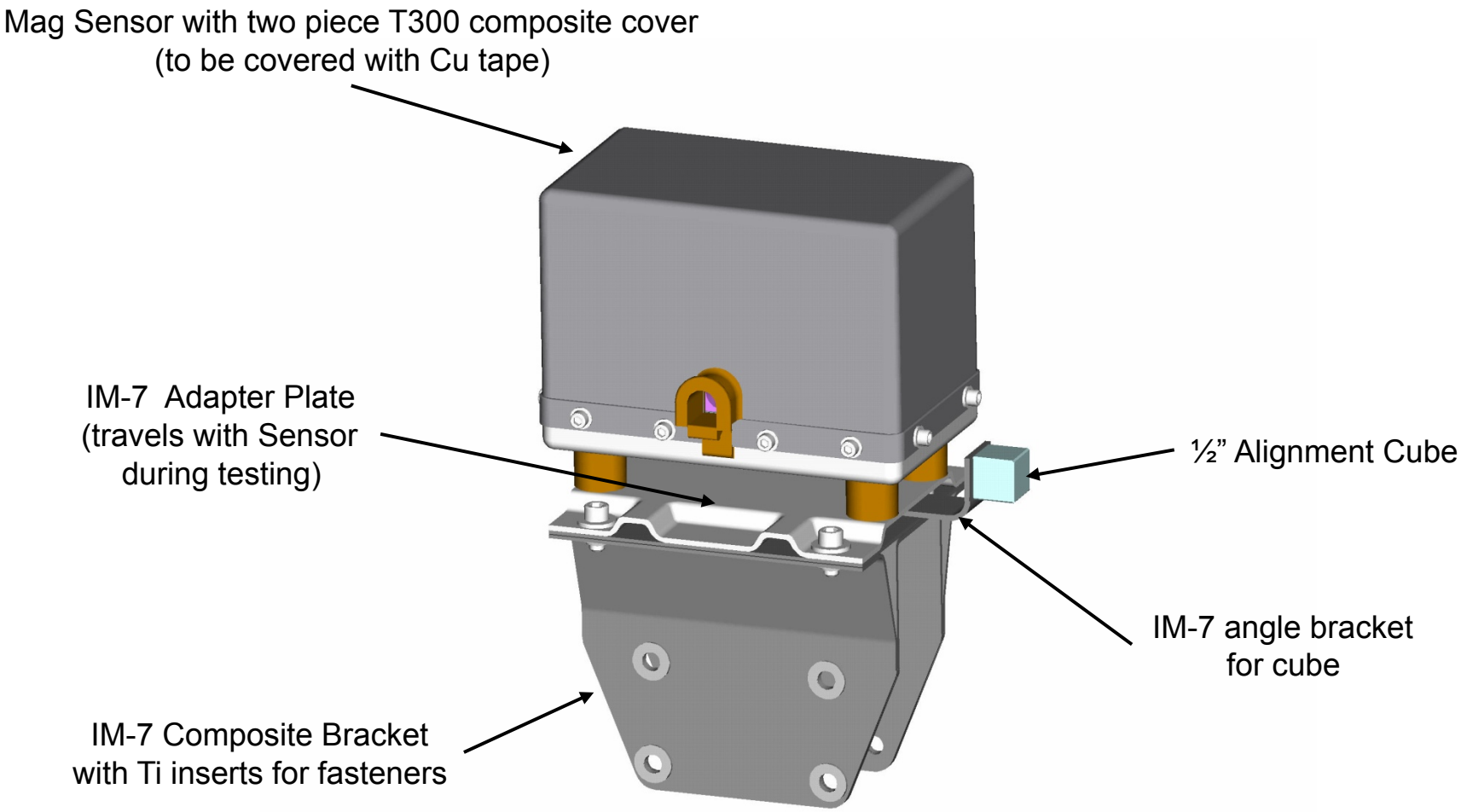

MAVEN Mag Sensors & Fixtures

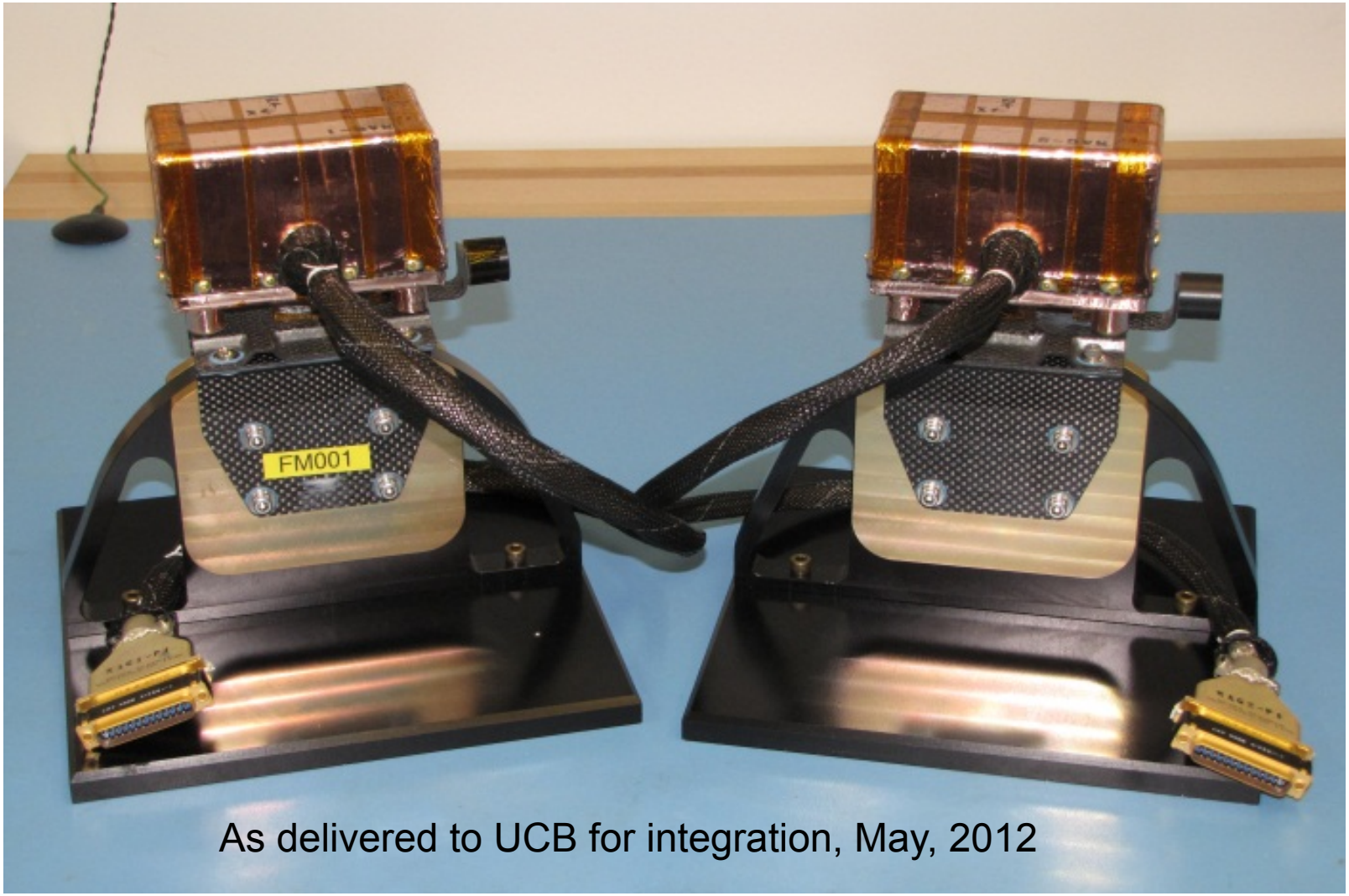

As delivered to UCB for integration, May, 2012

MAVEN MAG Calibration Timeline

FM1	THINSHELL	ZEROS	MAGSAT	3-SPIN
23FEB12		√	√	
28FEB12	√	√	√	
12MAR12	√	√	√	
14MAR12	√	√	√	
MARCH 13-21 THERMAL BALANCE				
18APR12		√	√	
APRIL 21-23 VIBRATION				
19APR12	√	√	√	
25APR12	√	√	√	
27APR12				√
MAY 2-10 THERMAL CYCLES				
14MAY12	X	X	X	
15MAY12		X	X	
FM2				
13MAR12	√	√		
MARCH 13-21 THERMAL BALANCE				
21MAR12		√	√	
20APR12	√	√	√	
APRIL 21-23 VIBRATION				
25APR12	√	√	√	
30APR12				√
MAY 2-10 THERMAL CYCLES				
15MAY12	X	X	X	

MAVEN MAG – Calibration

GSFC 22 foot MAG test & calibration facility

facility electronics

MAVEN Noise Performance

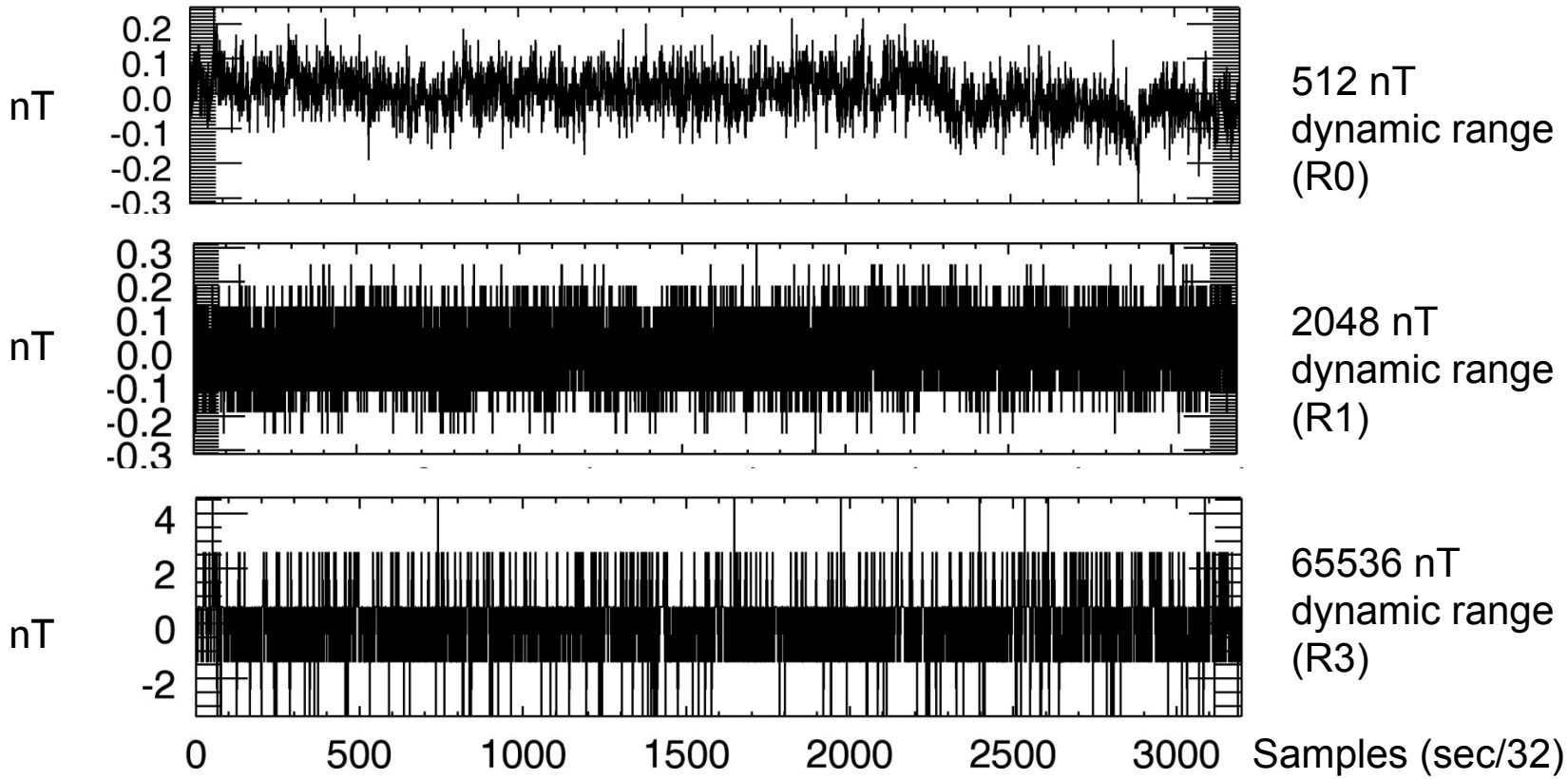

- Measured noise in Mu-metal shield can at magnetic test facility (includes environmental noise and instrument noise).
- ~ ±0.1 nT variation in both operational ranges 0 & 1 (<< 1 nT requirement L4-FGM-04).
- Range 3 (Earth environment test and ATLO functionality only) noise is limited by the digital step size of the 16-bit A/D converter.

MAVEN FM Noise Performance

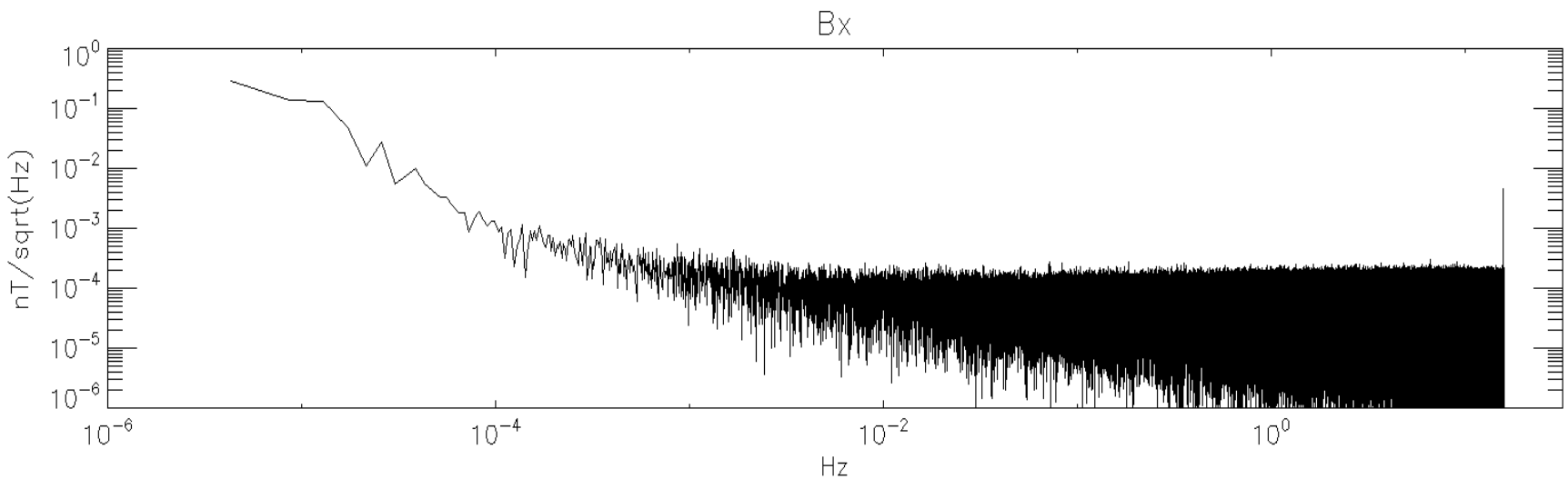

- Measured at GSFC magnetic test site over the weekend, sensor in a cylindrical multi-layer Mu metal shield can.
- Measurement of the sum of FGM sensor noise *plus* environmental noise.

MAVEN FM Noise Performance

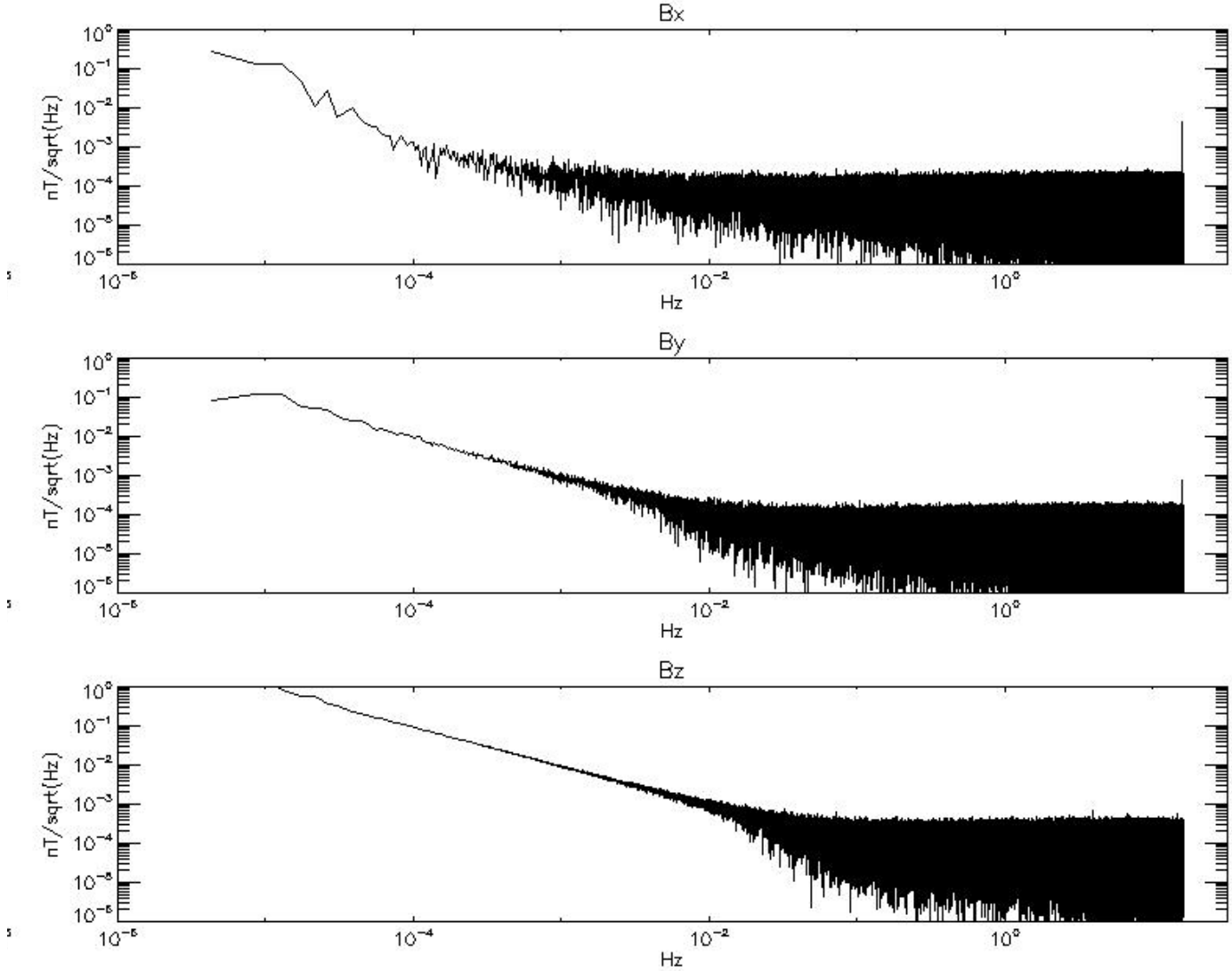

X and Y axes are orthogonal to axis of open-ended shield can;
(less environmental field).

Z axis aligned with axis of open-ended shield can;
(more environmental field).

MAVEN MAG – MAGSAT Calibration

MAGSAT calibration method simultaneously solves for sensor scale factors, orthogonality, and coil system (facility) orthogonality, via a series of precise 90 degree rotations (sensor optical cubes with 10 arcsec accuracy and theodolites).

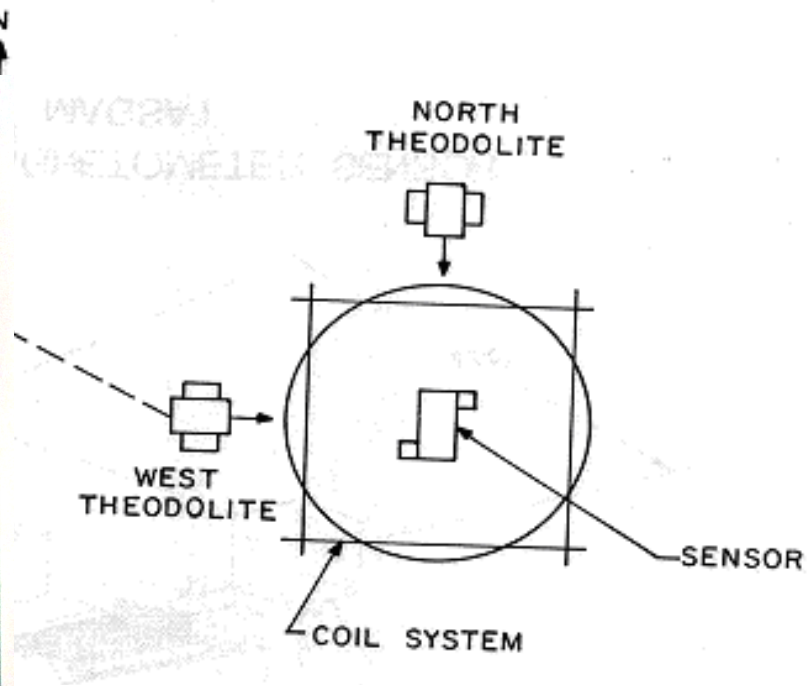

MAVEN FM2 Calibrations Example

```
 IDL> mcsum,DIR='MAVEN/FM2/15May12',RNG=3,/NRM
Magsat Analysis
     range: 3 normalized
   Fit RMS:  1.13
   Run Time: Tue May 15 11:45:08 2012
 zeros file:  /Users/jackconnerney/idl/cal/MAVEN/FM2/15May12/zeros/mv_tt_ttp.txt
magsat file:  /Users/jackconnerney/idl/cal/MAVEN/FM2/15May12/magsat/mv_tt_ttp.txt
facgrd file:  /Users/jackconnerney/idl/cal/MAVEN/FM2/15May12/fac_grad/mv_tt_ttp.txt
  zerotable:
     0.442250    -0.070500     1.204000     0.000000
     0.311500    -0.058000     1.294500     0.000000
    -5.568750     0.155250     4.711500     0.000000

scale factors:     0.992422     0.993478     0.990445

sensor model amx:
                1.000000     0.003367    -0.004583
                0.001080     1.000000     0.000818
                0.004007     0.002564     1.000000

  symmetric part:
                1.000000     0.002223    -0.000288
                0.002223     1.000000     0.001691
               -0.000288     0.001691     1.000000

a-symmetric part:
                0.000000     0.001143    -0.004295
               -0.001143     0.000000    -0.000873
                0.004295     0.000873     0.000000

     rotation by:  0.259510 degrees
about unit vector:  0.192731    -0.948231    -0.252415
```

< MAGSAT calibration method

```
 File: /Users/jackconnerney/idl/cal/Maven/FM2/15May12/
thinshellFM2.sts
 Iteration:      3
Constraints:    1.    1.    1.    1.    1.    1.    1.    1.    1.    1.    1.    1.
 Std. Dev.:     0.53545255

Zeros (x, y, z):     -6.228662     0.042541     4.579845

Scale factors:       0.992155     0.993195     0.990182

Sensor model (symmetric) A Matrix:

                1.000000     0.002214    -0.000304
                0.002214     1.000000     0.001726
               -0.000304     0.001726     1.000000

continue?:
```

“thin shell” calibration method in box

MAVEN Spacecraft Accommodation

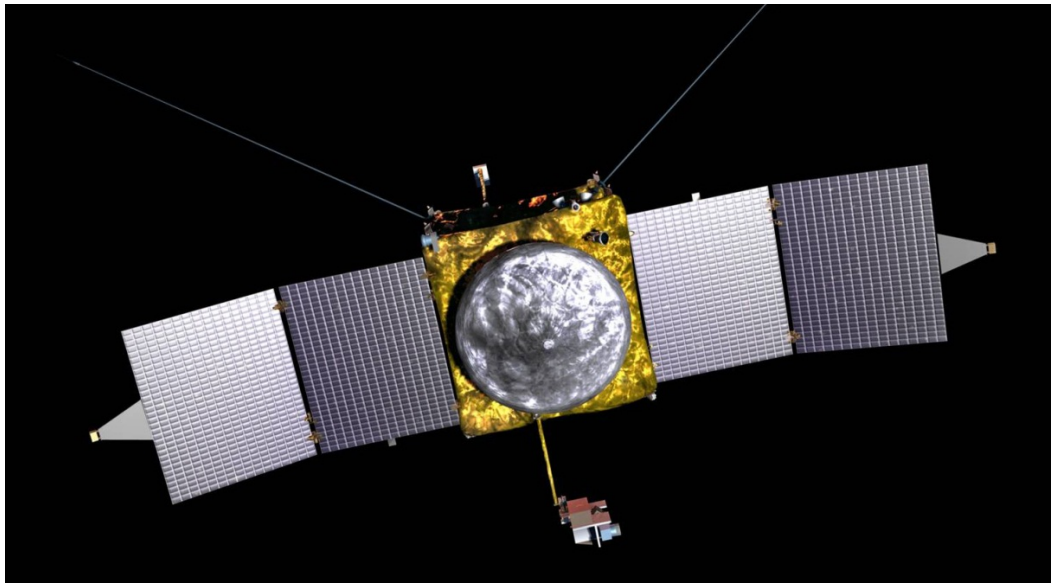

MAG sensors accommodated on extended solar array panels

Spacecraft Magnetic Control Program to manage s/c magnetic fields and meet measurement requirements (2 nT static, 0.25 nT variable).

- Minimize use of magnetic materials.
- Characterization and self-cancellation of magnetic components (TWTA, propulsion latch valves, etc.).
- Minimize current loops (twisted pairs, ground returns).
- Solar array compensation ("backwiring" individual cell strings).
- "U-string" backwiring (Juno, RBSP heritage) adopted, LM array fab.

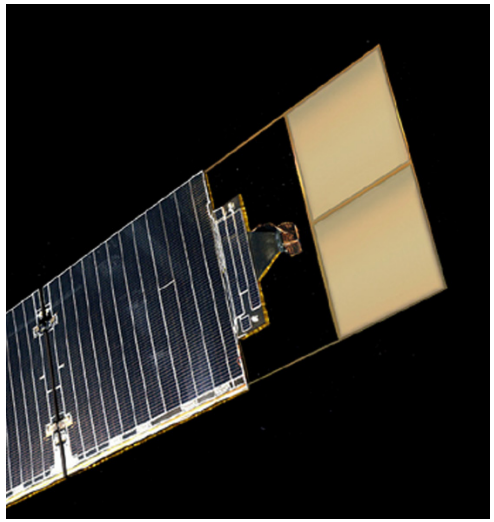

MGS array

MAVEN Solar Array Compensation

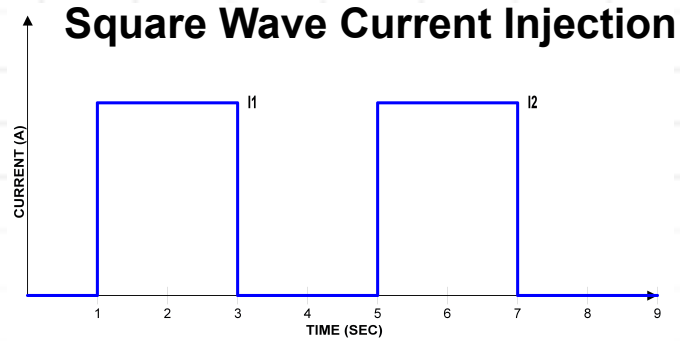

Solar Array Magnetic Test

Solar Array Test Data –Linear String

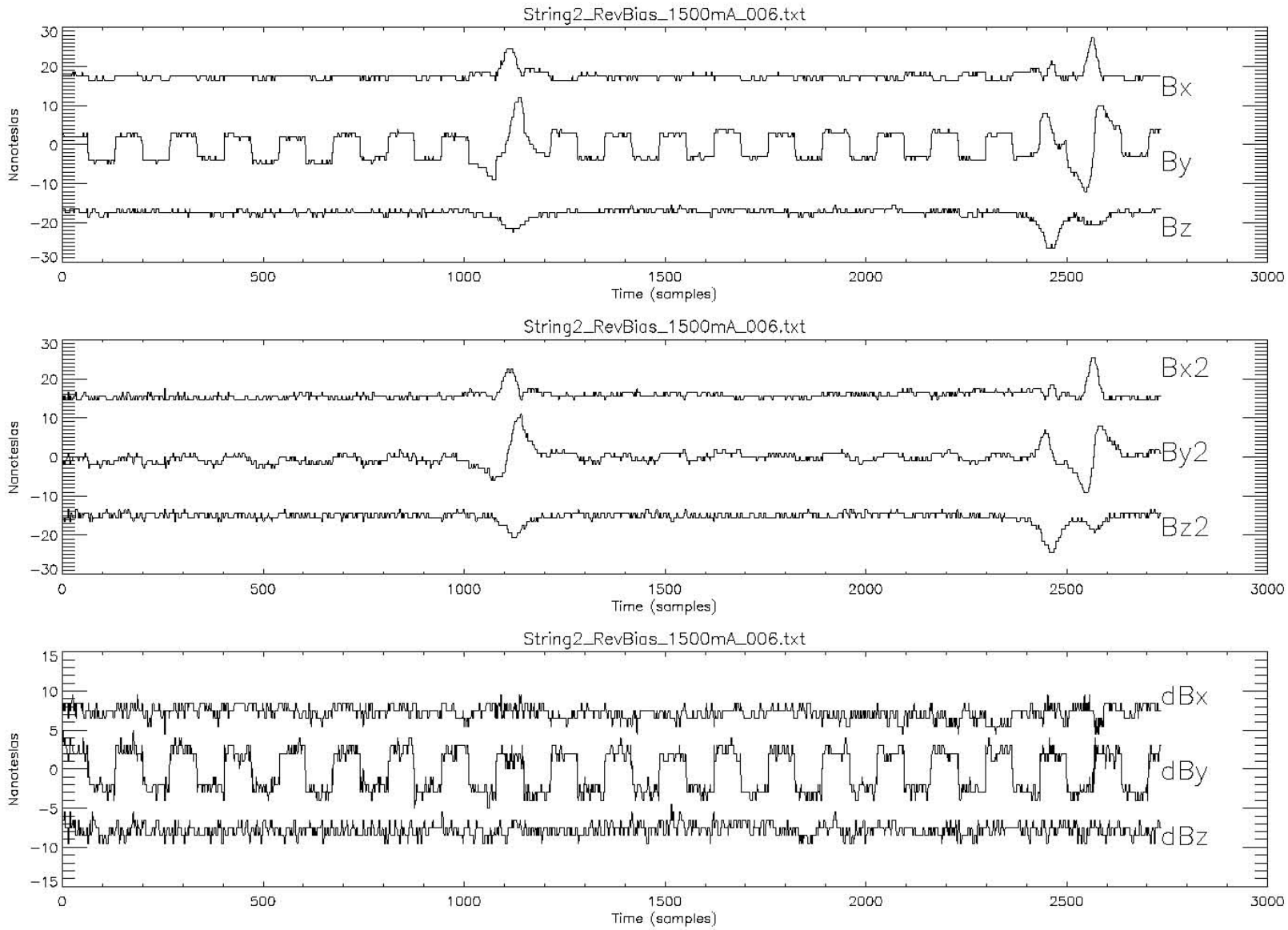

Solar Array Magnetic Test Results

filename: String2_RevBias_1500mA_006.txt

String2_RevBias_1500mA_006.txt

String 2, Forward Bias, ******** SA Test, 12-03-09, *****

	[0.5 m]		[1.0 m]			
component	MAG#1	(sd-m)	MAG#2	(sd-m)	M#1-M#2	(sd-m)
Bx =	0.2319	0.1181	-0.0476	0.0838	-0.0192	0.1298
By =	6.3959	0.0533	1.6331	0.0300	4.7976	0.0398
Bz =	0.4288	0.0591	0.1429	0.0597	0.2593	0.0491

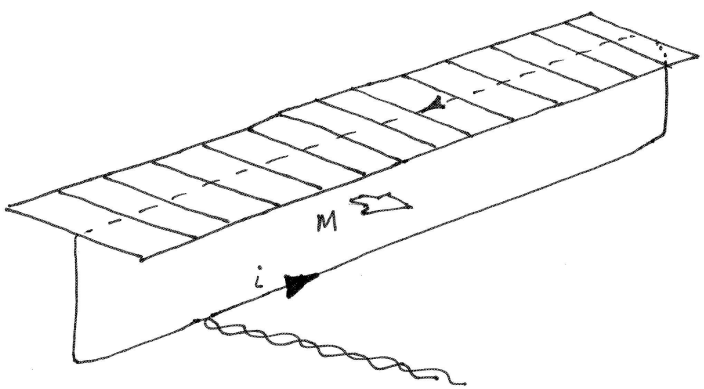

simple linear string;

calculated 4.4 nT/A at 0.5 m (6.6 nT 1.5A)
and 0.92 nT/A at 1.0 m (1.4 nT 1.5A)

Solar Array – MAVEN Design

- Backwired Cell Strings tested in several configurations
  - 14 Cell U-string configuration
  - 23 Cell linear configuration
- Test results compare favorably to model calculations
- Typically achieve order magnitude reduction in stray field relative to uncompensated strings
- Estimate ~1 nT/A at 1 m distance for linear string (evenly paired strings may reduce by factor 5 or so).
- Estimate < 0.1 nT/A at 1 m distance for U-string configuration.

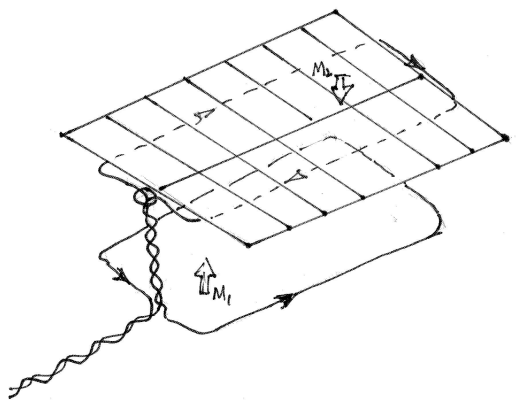

U- string configuration

Self-nulling (does not depend on adjacent paired string); residual field in plane.

Magnetometer Data Flow - 1

MGS FGM Health and Safety Check

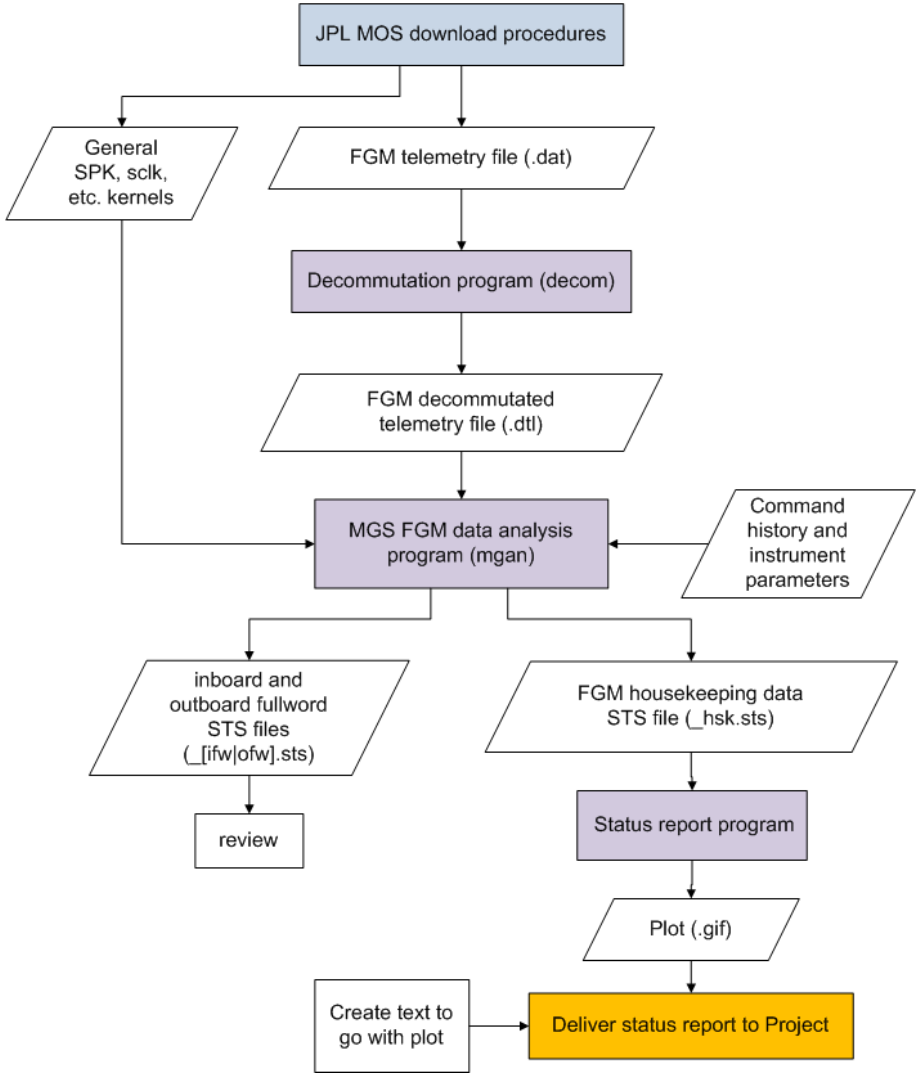

Magnetometer Data Flow - 2

MGS MAG Preliminary and Archive Processing

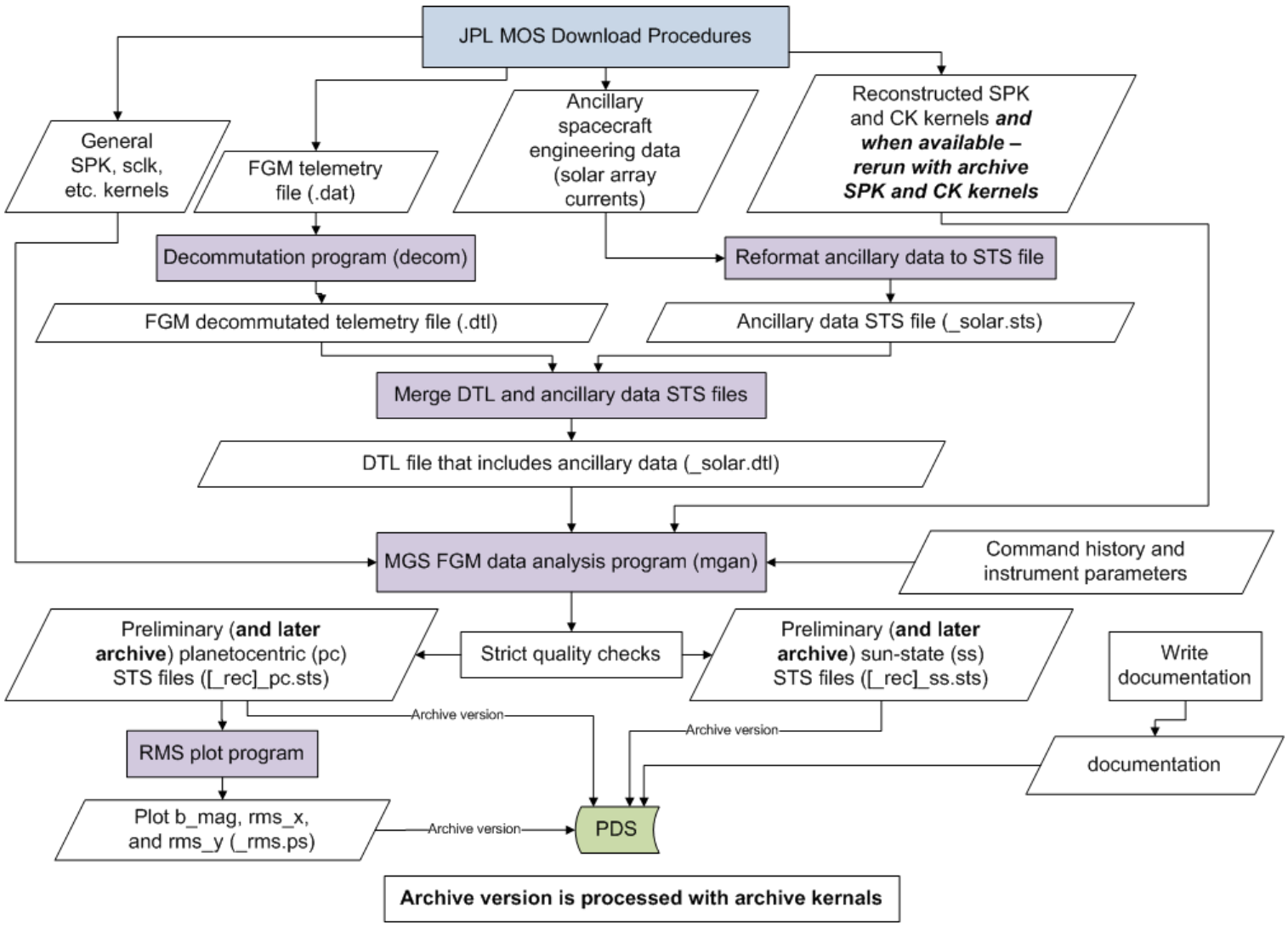

MAG Data Processing Pipeline

- Science Data and Archive Processing (MGAN)
  - FORTRAN First (MGAN)
  - IDL used extensively for analysis
  - MGS heritage w/modifications
    - Different spacecraft and instrument kernels as NAIF-like text input files
    - Mission specific customization
      - For example, magnetic cleanliness
      - Some requirements will not be known until after launch and in-flight spacecraft performance verification
- Revision Control System (RCS) used
- UNIX Environment
- Produce a variety of “Standard Time Series” data files (ASCII)
  - Time, magnetic field vectors, s/c position relative to relevant target body, and any ancillary engineering data that might be of use to investigators.
  - Planetocentric (body-fixed) coordinates, Sun-state (sun-fixed) coordinates, and target bodies as desired: Mars, Phobos, Deimos, etc.

Data Archive Products

Telemetry files

- As received from SOC
- Detached PDS labels to be delivered to SOC

Standard time series (STS) files

- Attached PDS labels
- Planetocentric Cartesian (PC) coordinates:
  - z axis is aligned with the planet rotation axis, x axis aligned with the IAU Prime Meridian zero longitude, and the y axis completes the system.
- Sun-state (SS) Cartesian coordinate system:
  - primary reference vector is the planet-Sun vector (x axis) and the secondary reference vector (y axis) is (anti-) parallel to the planet state vector, i.e., in the planet orbital plane; z axis completes the system.
- Others as appropriate

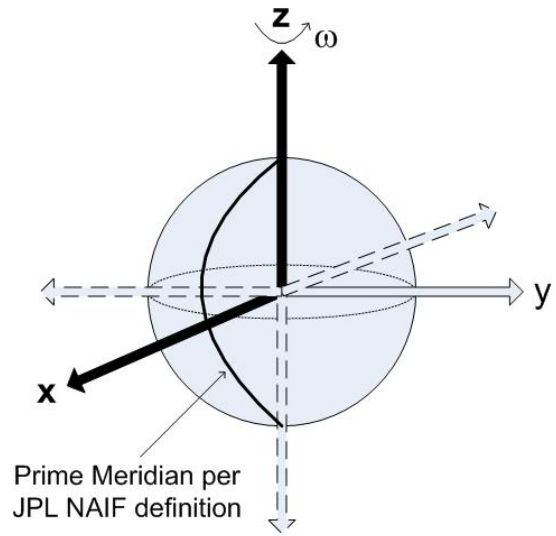

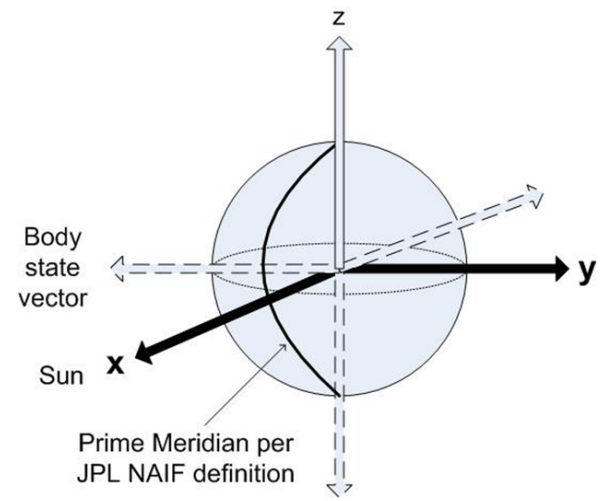

Sample STS file – Attached Header

- Sample Standard Time Series (STS) file (from MGS)

```
OBJECT     = FILE
OBJECT  = HEADER
 PROGRAM   = mgan
 CMD_LINE  =  -mars -odl -magonly -pc -sc time dday ob_b posn ob_rms
           ob_bscpl ob_bdpl sam_i sap_i sao_i
 DATE      = Thu Jan 11 21:08:47 2007
 HOST      = lepmom
 COMMENT   =  This version MGAN compiled with F77 revision. 4.2 and
           spicelib MSOP_SCI V.6 (GENERIC_TOOLKIT V.N0049  on JUN 04,
           2000 by J.E.P. CONNERNEY (NASA/GSFC).
 TITLE     =  MARS GLOBAL SURVEYOR MAG/ER
OBJECT     = CK_DOCUMENTATION

 MGS Solar Array CK File for Extended Mission
 ==============================================================================

 Created by Boris Semenov, NAIF/JPL, Thu Jan 11 11:12:48 PST 2007
....

END_OBJECT
OBJECT     = RECORD
OBJECT  = VECTOR
 NAME   = TIME
 ALIAS  = TIME
 TYPE   = INTEGER
 OBJECT   = SCALAR
  NAME   = YEAR
  FORMAT =  1X,I4
 END_OBJECT
 OBJECT   = SCALAR
  NAME   = DOY
  FORMAT =  1X,I3
 END_OBJECT
```

continued >>>

```
...
END_OBJECT
OBJECT  = SCALAR
 NAME   = DDAY
 ALIAS  = DECIMAL_DAY
 TYPE   = REAL
 FORMAT =  F13.9
END_OBJECT
OBJECT  = VECTOR
 NAME   = OB_B
 ALIAS  = OUTBOARD_B_J2000
 TYPE   = REAL
 OBJECT   = SCALAR
  NAME   = X
  FORMAT =  1X,F9.3
  UNITS  = NT
 END_OBJECT
 OBJECT   = SCALAR
  NAME   = Y
  FORMAT =  1X,F9.3
  UNITS  = NT
 END_OBJECT
 OBJECT   = SCALAR
  NAME   = Z
  FORMAT =  1X,F9.3
  UNITS  = NT
 END_OBJECT
 OBJECT   = SCALAR
  NAME   = RANGE
  FORMAT =  1X,F4.0
 END_OBJECT
END_OBJECT
```

Sample STS file – Continued

```
OBJECT   = VECTOR
 NAME   = POSN
 ALIAS  = SC_POSITION
 TYPE   = REAL
 OBJECT   = SCALAR
  NAME   = X
  FORMAT =  1X,F11.3
  UNITS  = KILOMETERS
 END_OBJECT
 OBJECT   = SCALAR
  NAME   = Y
  FORMAT =  1X,F11.3
  UNITS  = KILOMETERS
 END_OBJECT
 OBJECT   = SCALAR
  NAME   = Z
  FORMAT =  1X,F11.3
  UNITS  = KILOMETERS
 END_OBJECT
END_OBJECT
OBJECT   = VECTOR
 NAME   = OB_RMS
 ALIAS  = OUTBOARD_RMS
 ...
 END_OBJECT
END_OBJECT
OBJECT   = SCALAR
 NAME   = SAM_I
 ALIAS  = SA_-Y_CURRENT
 TYPE   = INTEGER
 UNITS  = MILLIAMPERES
 FORMAT =  I8
END_OBJECT
OBJECT   = SCALAR
 NAME   = SAP_I
 ALIAS  = SA_+Y_CURRENT
 TYPE   = INTEGER
 UNITS  = MILLIAMPERES
 FORMAT =  I8
END_OBJECT
OBJECT   = SCALAR
 NAME   = SAO_I
 ALIAS  = SA_OUTPUT_CURRENT
 TYPE   = INTEGER
 UNITS  = MILLIAMPERES
 FORMAT =  I8
END_OBJECT
END_OBJECT
END_OBJECT
```

continued

```
2006 306  0  2 58 848 306.002070000   16.938  -16.899   30.626  10.   -356.715   3693.255   -707.423   ... 13255   13327   26091
2006 306  0  3  1 848 306.002104722   16.406  -17.952   30.793  10.   -355.585   3695.339   -697.518   ... 13256   13327   26093
2006 306  0  3  4 848 306.002139444   16.353  -18.558   31.216  10.   -354.452   3697.395   -687.609   ... 13256   13326   26095
2006 306  0  3  7 848 306.002174167   16.344  -19.250   31.082  10.   -353.315   3699.425   -677.694   ... 13256   13326   26097
2006 306  0  3 10 848 306.002208889   16.360  -19.947   30.324  10.   -352.175   3701.428   -667.774   ... 13256   13326   26099

....

2006 306 12  1 22 840 306.500958796   13.306  -10.398  -23.599  10.    517.050  -3381.092   1649.512   ... 12930   13425   25734
2006 306 12  1 25 840 306.500993519   14.189  -10.519  -25.047  10.    515.105  -3377.033   1658.580   ... 12921   13425   25723
2006 306 12  1 28 840 306.501028241   13.586  -11.439  -26.451  10.    513.159  -3372.949   1667.636   ... 12912   13425   25712
2006 306 12  1 31 840 306.501062963   12.333  -10.538  -24.357  10.    511.210  -3368.842   1676.681   ... 12903   13425   25701
2006 306 12  1 34 840 306.501097685   11.734  -10.320  -24.114  10.    509.260  -3364.710   1685.713   ... 12894   13425   25691
2006 306 12  1 37 840 306.501132407   11.552  -10.370  -24.840  10.    507.308  -3360.553   1694.734   ... 12884   13424   25680
2006 306 12  1 40 840 306.501167130   11.493  -10.742  -24.443  10.    505.354  -3356.373   1703.742   ... 12875   13424   25669
2006 306 12  1 43 840 306.501201852   10.251  -11.566  -24.895  10.    503.399  -3352.167   1712.739   ... 12866   13424   25658
2006 306 12  1 46 840 306.501236574    9.667  -12.248  -25.652  10.    501.441  -3347.938   1721.724   ... 12857   13424   25647
2006 306 12  1 49 840 306.501271296    9.854  -12.622  -24.928  10.    499.482  -3343.685   1730.696   ... 12848   13424   25636
2006 306 12  1 52 840 306.501306019    9.956  -12.253  -23.717  10.    497.522  -3339.407   1739.656   ... 12838   13424   25625
2006 306 12  1 55 840 306.501340741    9.819  -12.379  -23.273  10.    495.559  -3335.105   1748.604   ... 12829   13424   25614

....

2006 306 23 23 28 832 306.974639259   10.413   18.346    0.009  11.  -1146.627   2196.876  -2824.247   ... 13255   13267   26080
2006 306 23 23 31 832 306.974673981   10.822   18.959    0.499  11.  -1148.993   2204.264  -2817.613   ... 13253   13267   26076
2006 306 23 23 34 832 306.974708704   11.038   19.250    0.805  11.  -1151.347   2211.638  -2810.958   ... 13251   13267   26071
2006 306 23 23 37 832 306.974743426   10.999   19.285    1.221  11.  -1153.689   2218.996  -2804.282   ... 13249   13267   26066
2006 306 23 23 40 832 306.974778148   11.419   19.591    1.894  11.  -1156.020   2226.340  -2797.586   ... 13247   13267   26062
2006 306 23 23 43 832 306.974812870   11.446   20.140    1.769  11.  -1158.340   2233.668  -2790.870   ... 13246   13267   26057
```

Mars Atmosphere and Volatile Evolution Mission (MAVEN)

Try out some MAG **(MGS)** data:

http://mgs-mager.gsfc.nasa.gov/

….go to **"What's New"**

Circa mid to late 1990's; and let us know if you have any suggestions for how we might better anticipate your needs

Mario H. Acuña
1940 - 2009