Of straying photons, shiny apertures and inconstant solar constants – Advances in TSI radiometery

SORCE 2014 Science Meeting, 29 January 2014

Wolfgang Finsterle

Physikalisch-Meteorologisches Observatorium Davos
World Radiation Center

pmod wrc

Starting Point

Collection of “Solar Constants”

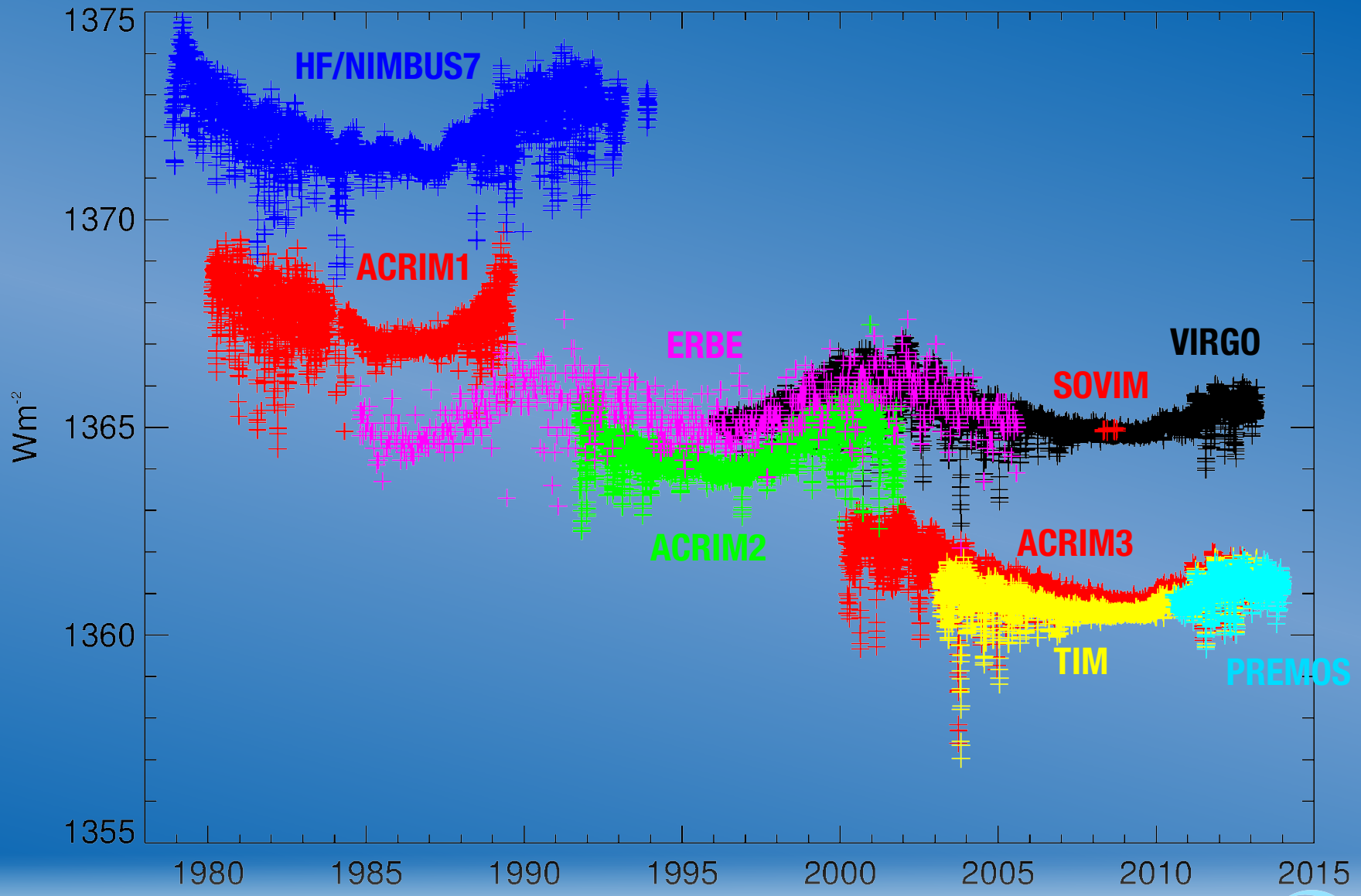

pmod wrc

Starting Point

Collection of “Solar Constants”

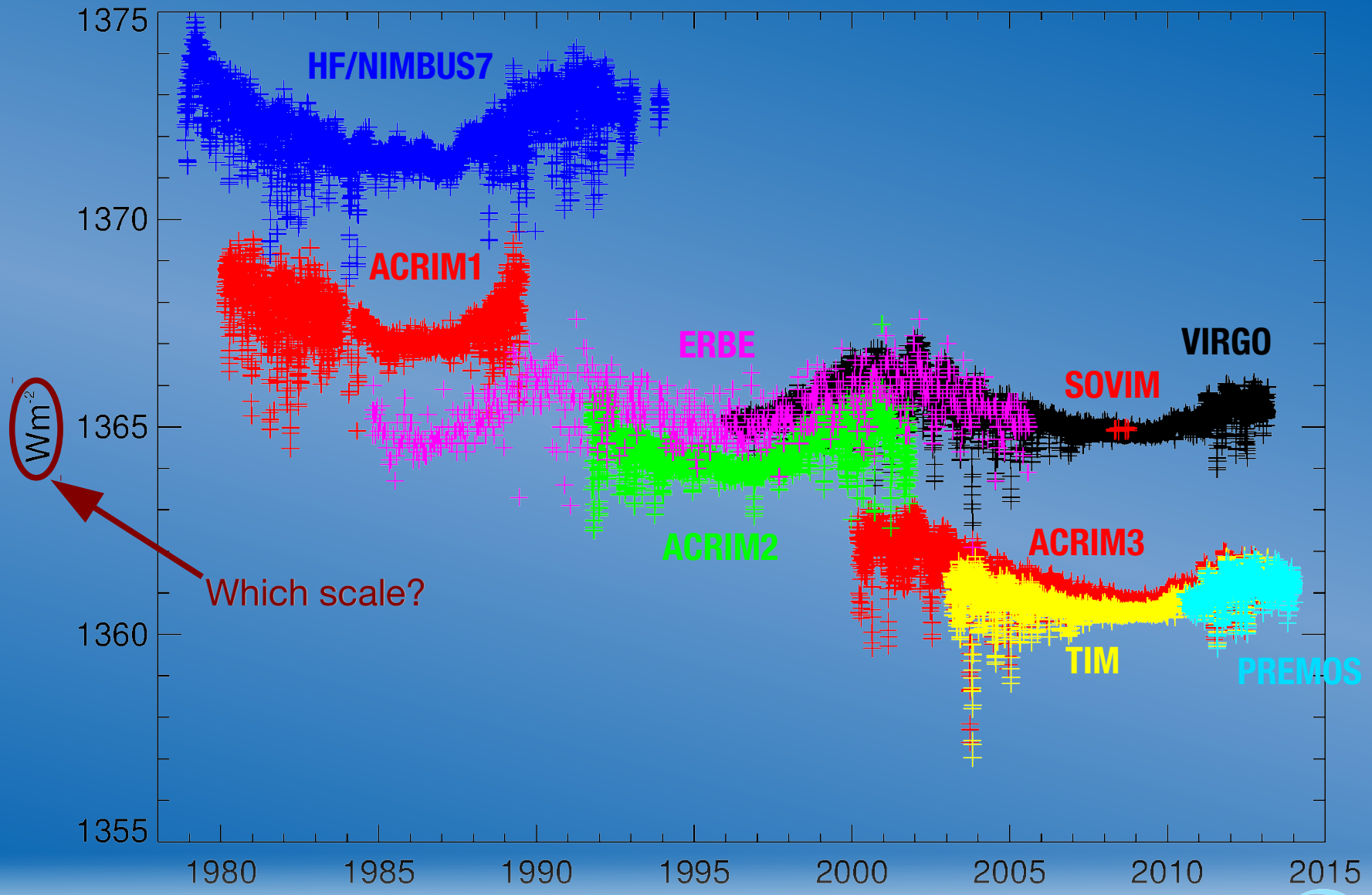

pmod wrc

Starting Point

Collection of “Solar Constants”

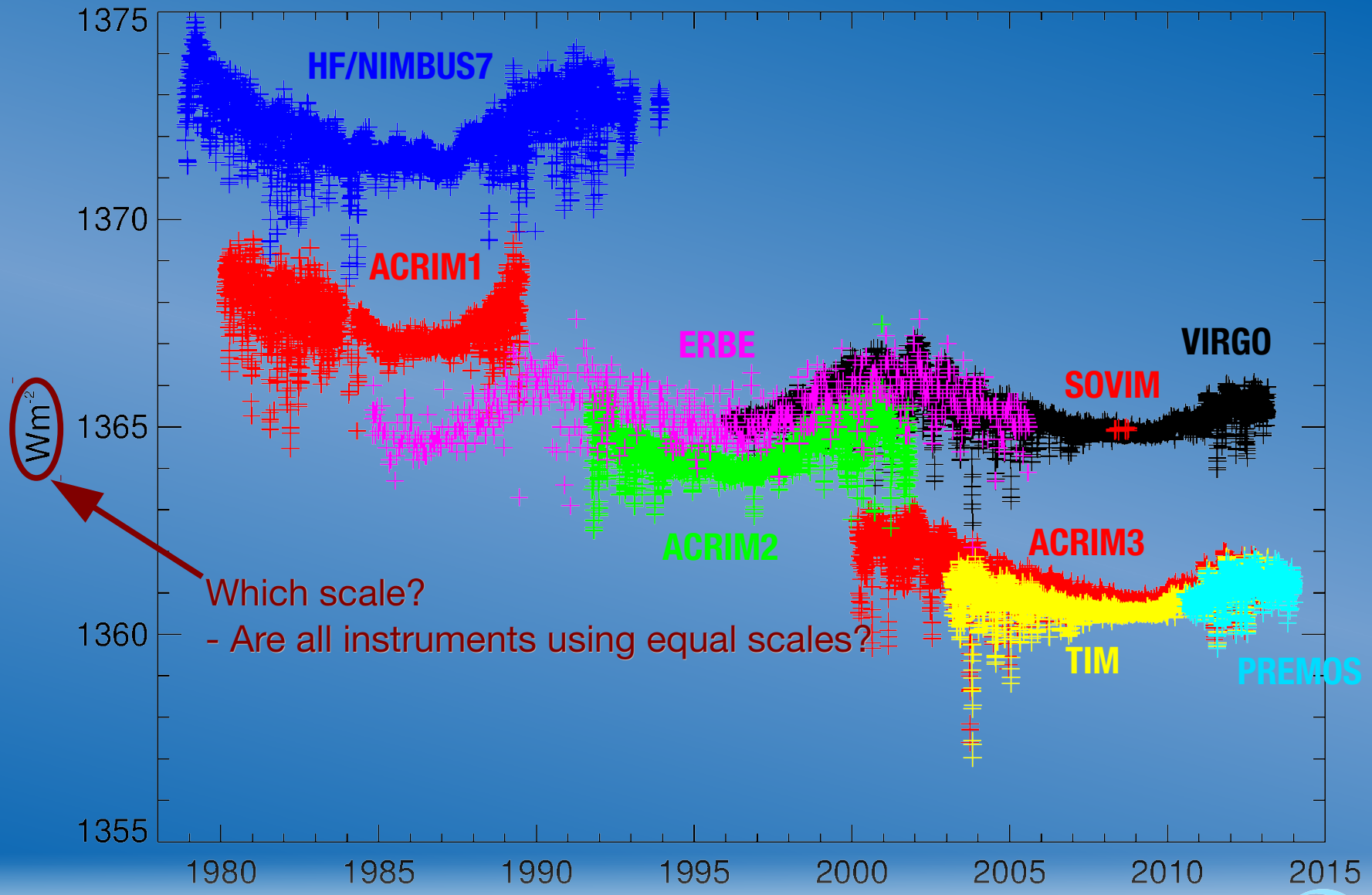

Which scale?

- Are all instruments using equal scales?

pmod wrc

Starting Point

Collection of “Solar Constants”

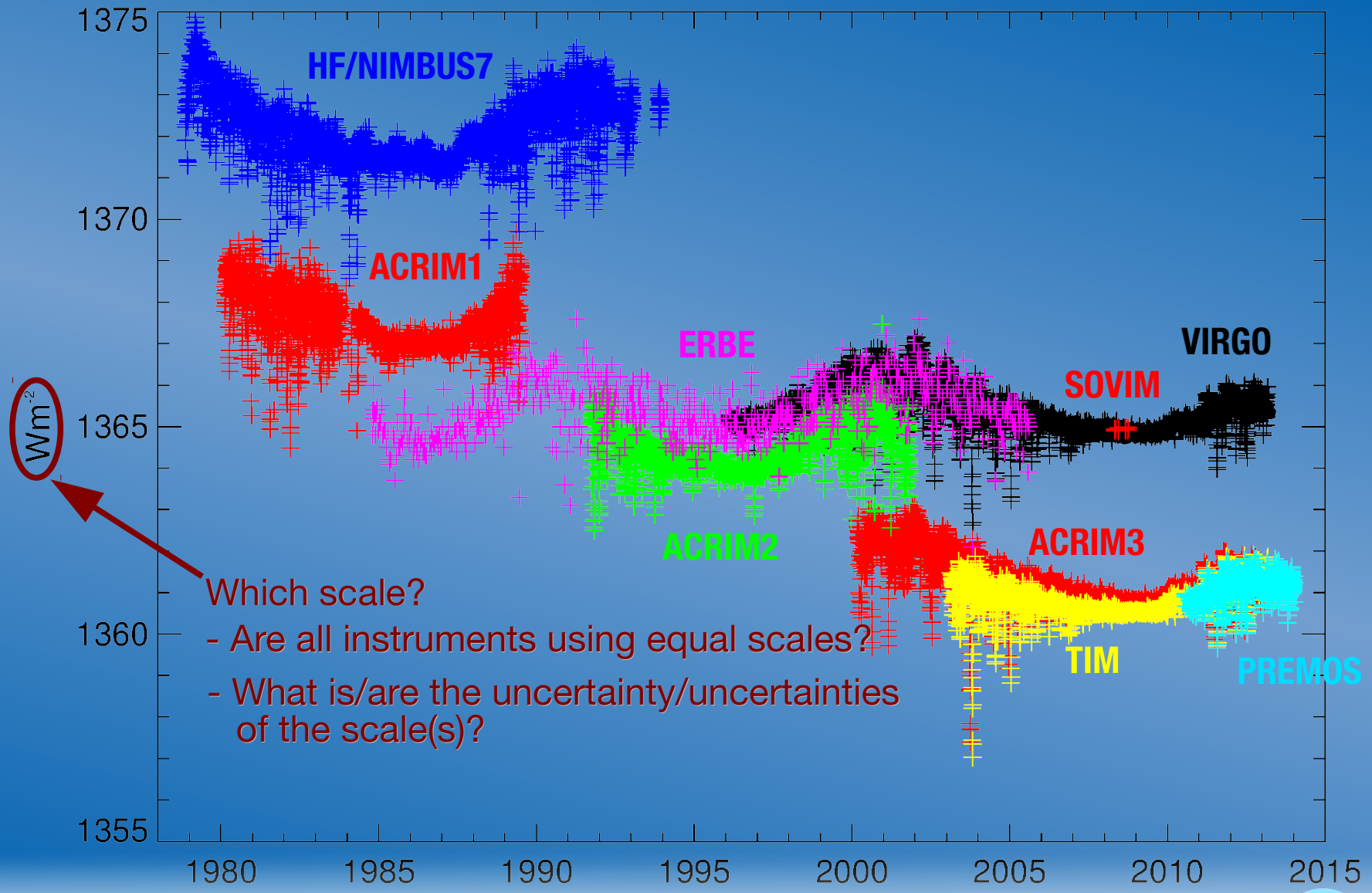

Which scale?

- Are all instruments using equal scales?
- What is/are the uncertainty/uncertainties of the scale(s)?

pmod wrc

Metrology of Solar Irradiance

courtesy Markus Suter

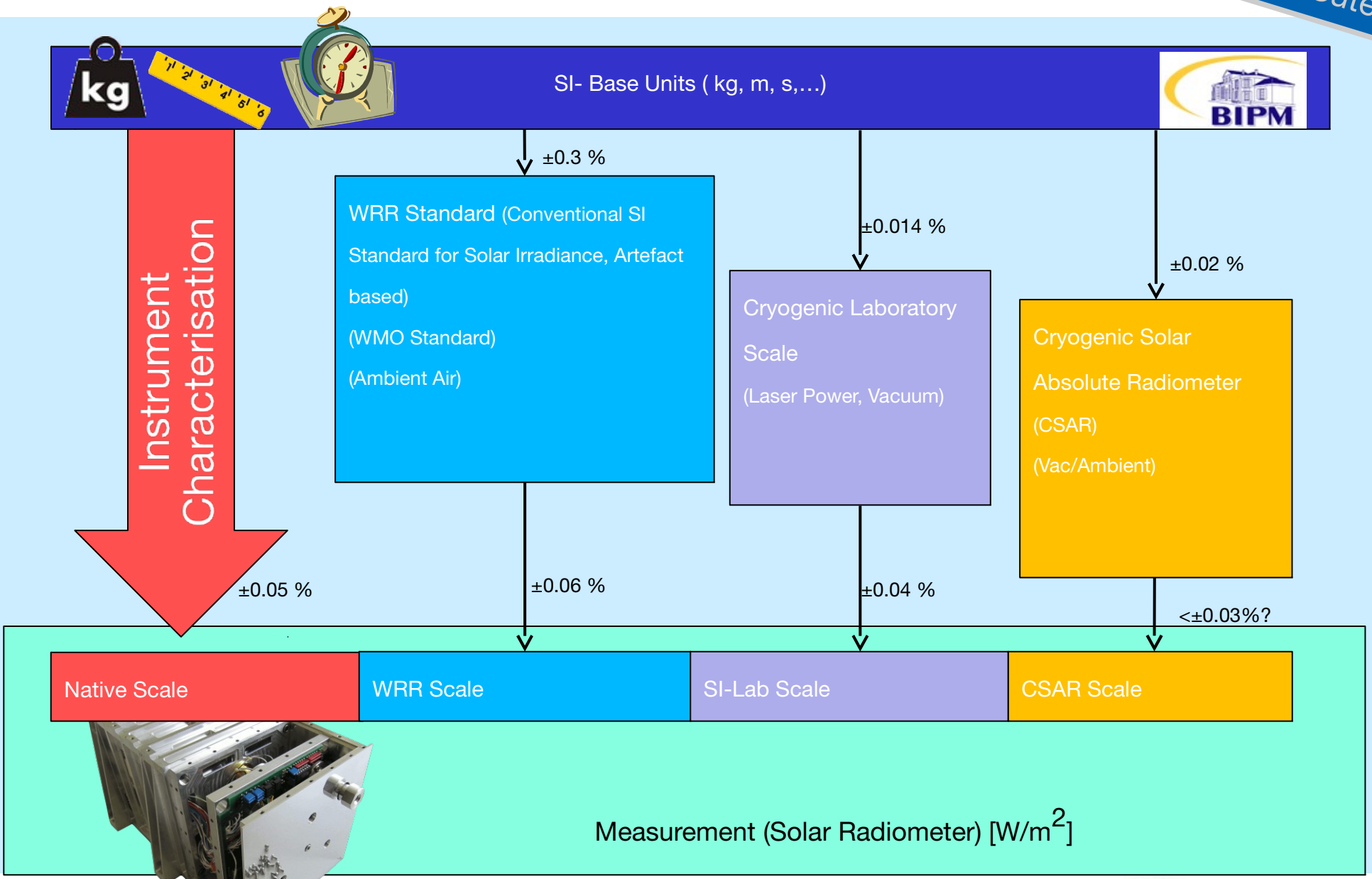

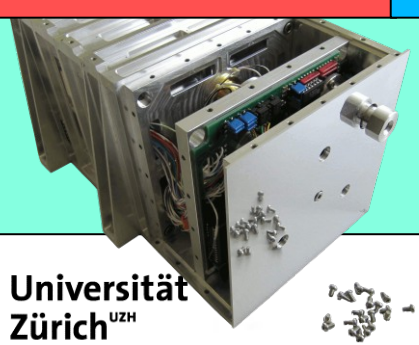

Universität Zürich[UZH]

pmod wrc

TSI reference scales since 1905

1905: Ångström

1911: Smithsonian

1956: IPS-56

1977: WRR

1995: SARR

2007: TRF (SI)

Collection of "Solar Constants"

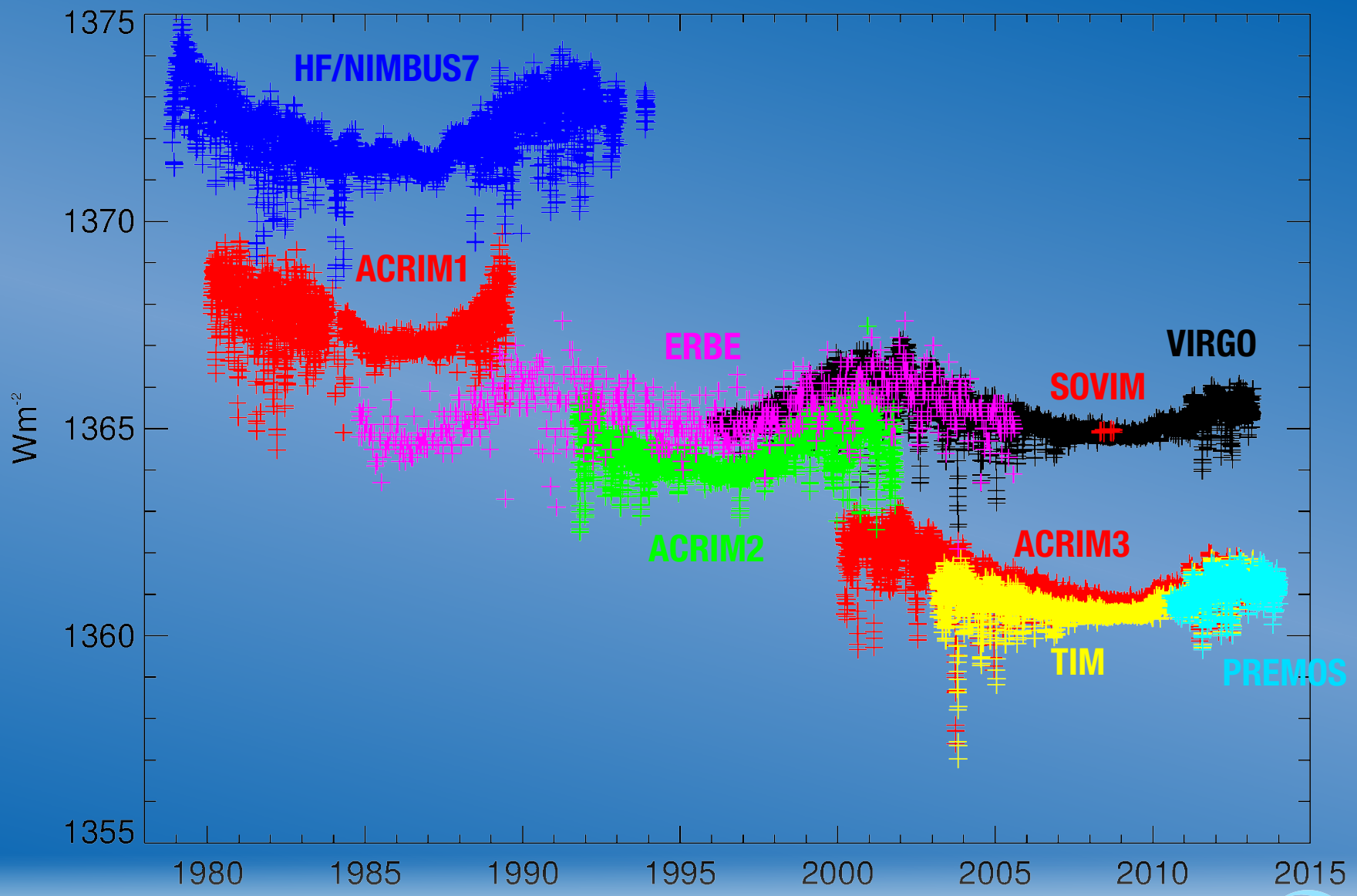

pmod wrc

Collection of "Solar Constants"

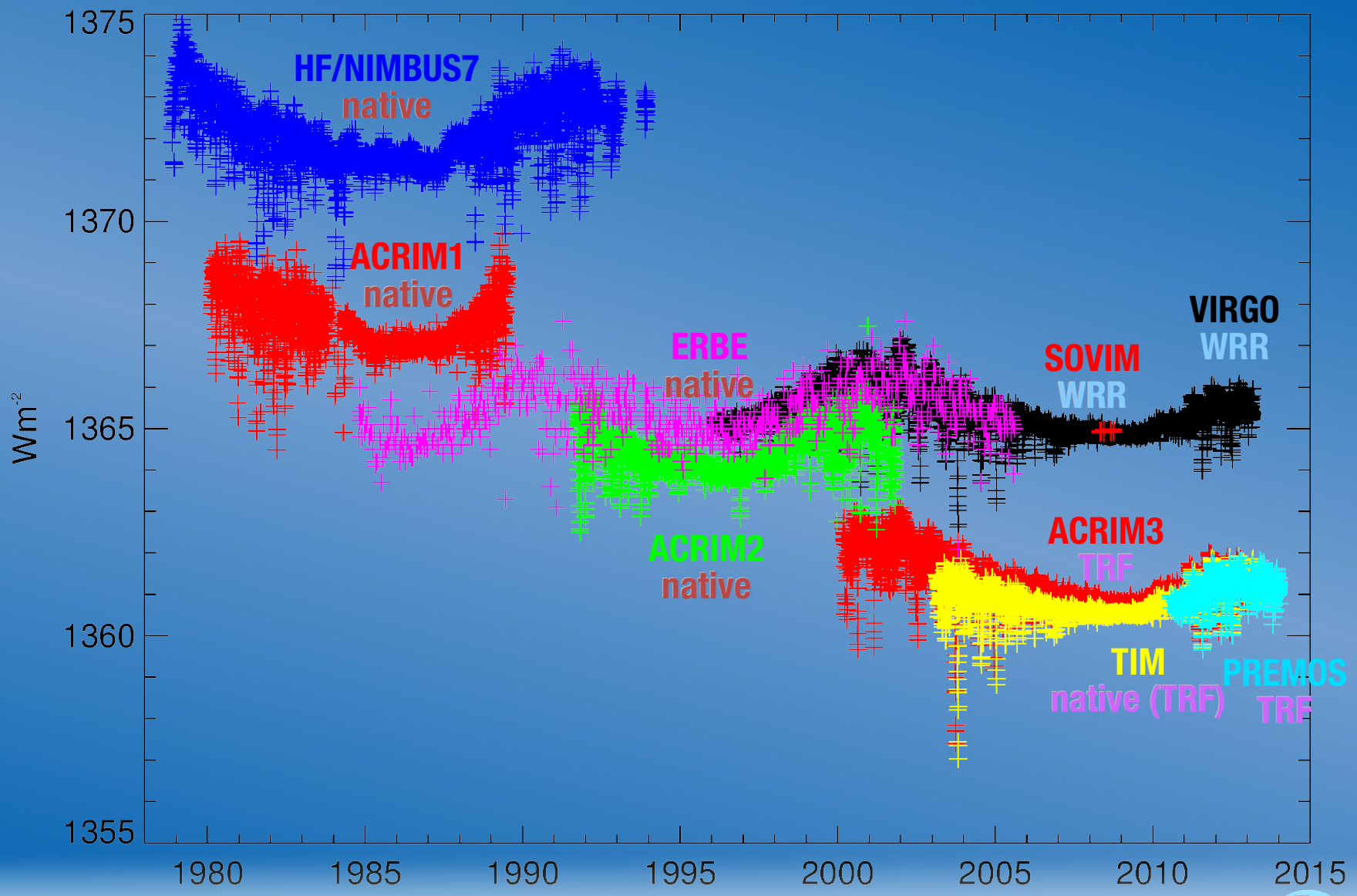

pmod wrc

Collection of "Solar Constants"

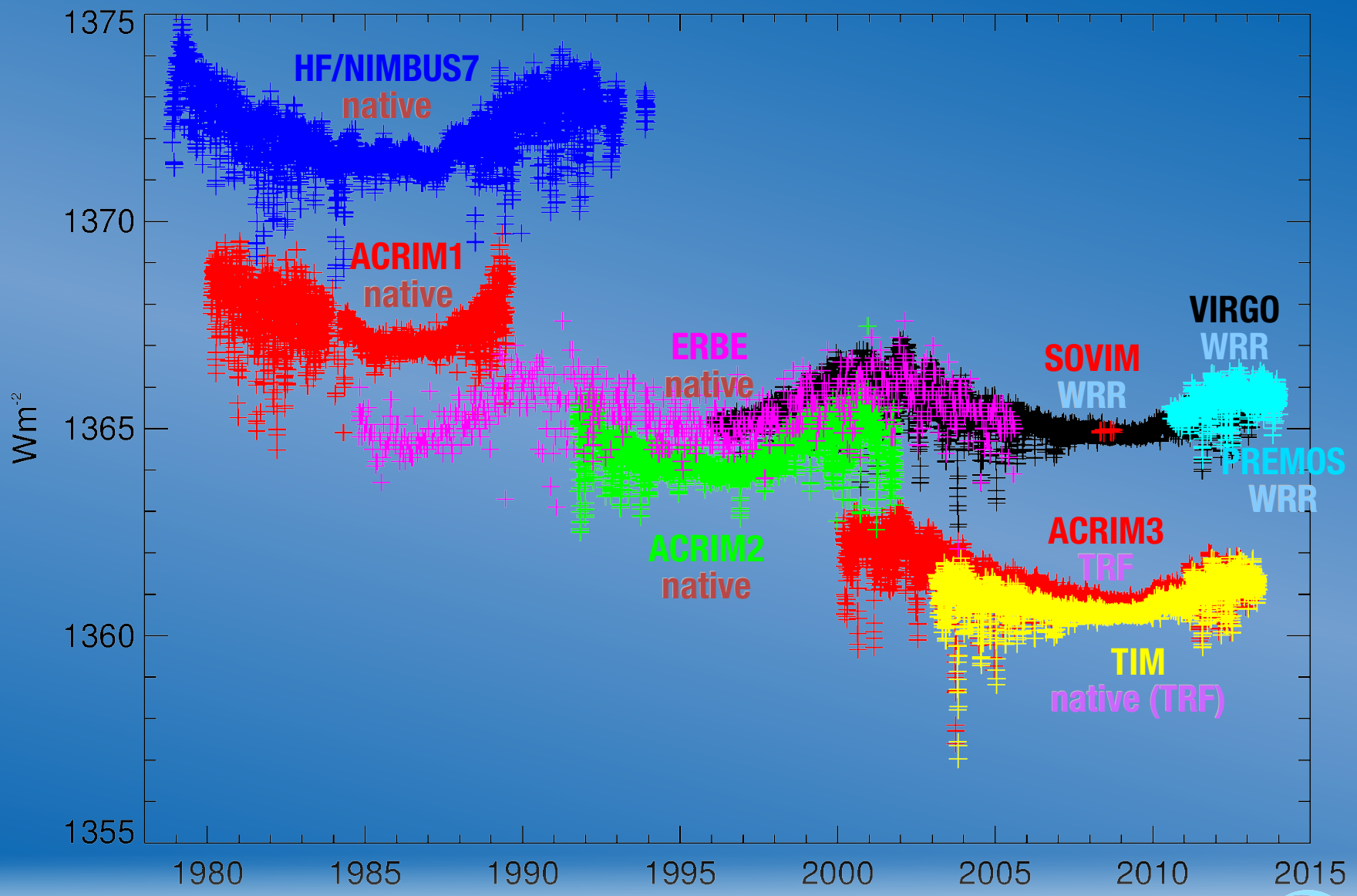

pmod wrc

Straying Photons

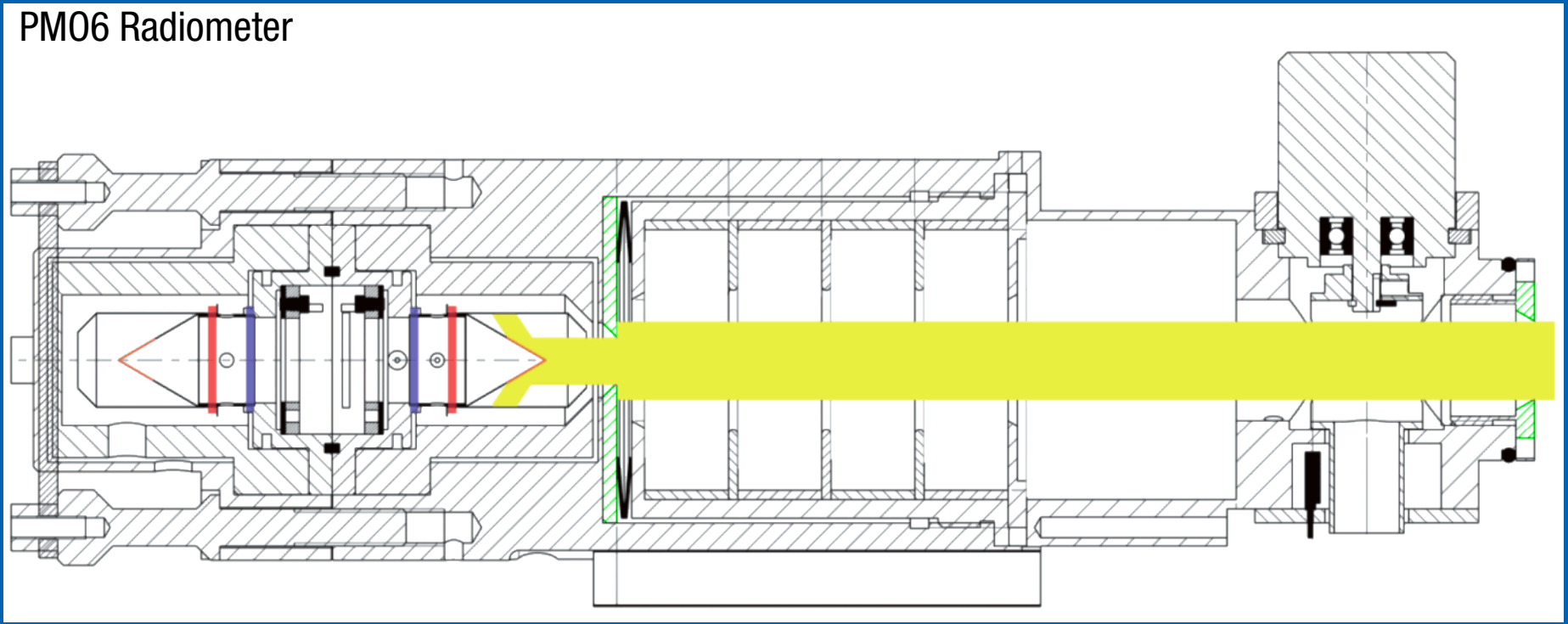

Scattered light was suggested by the NIST (2005) working group to cause the scale differences between TIM/SORCE and other TSI instruments (Butler et al. 2008).

pmod wrc

Straying Photons

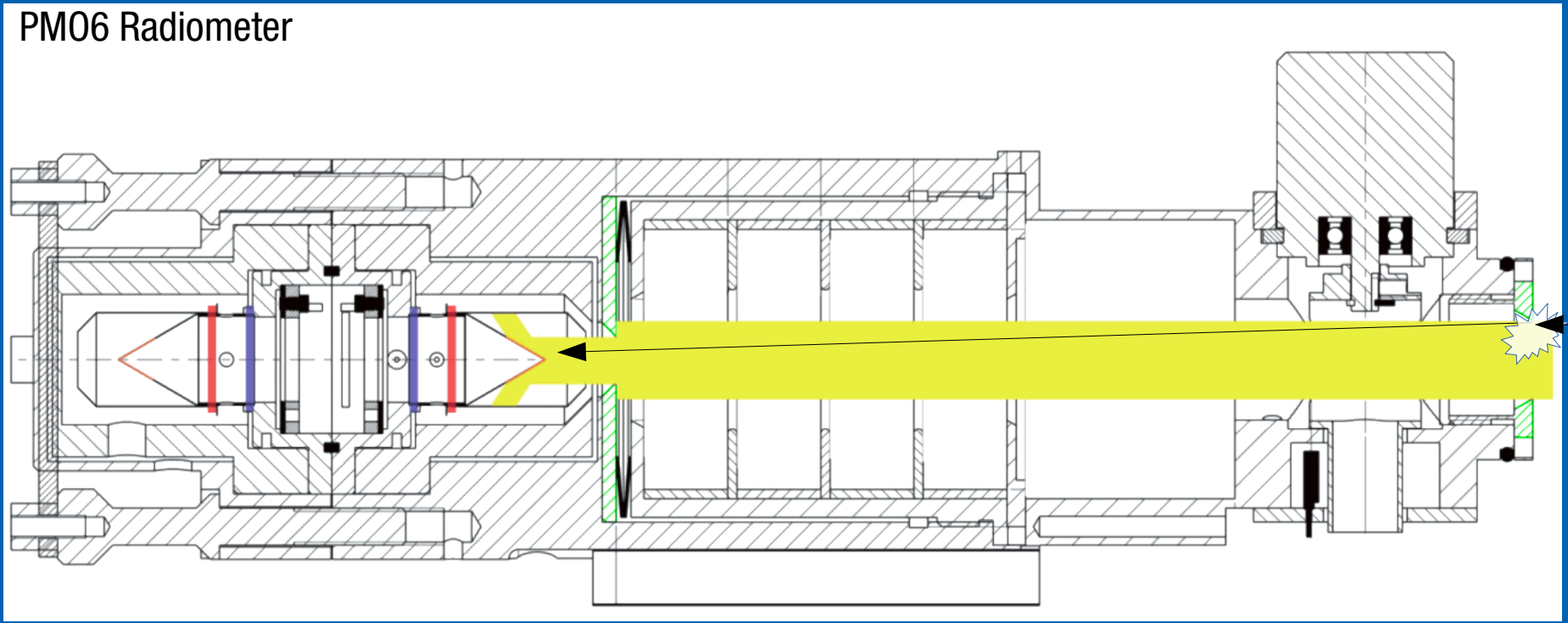

Scattered light was suggested by the NIST (2005) working group to cause the scale differences between TIM/SORCE and other TSI instruments (Butler et al. 2008).

pmod wrc

Straying Photons

PMO6 Radiometer

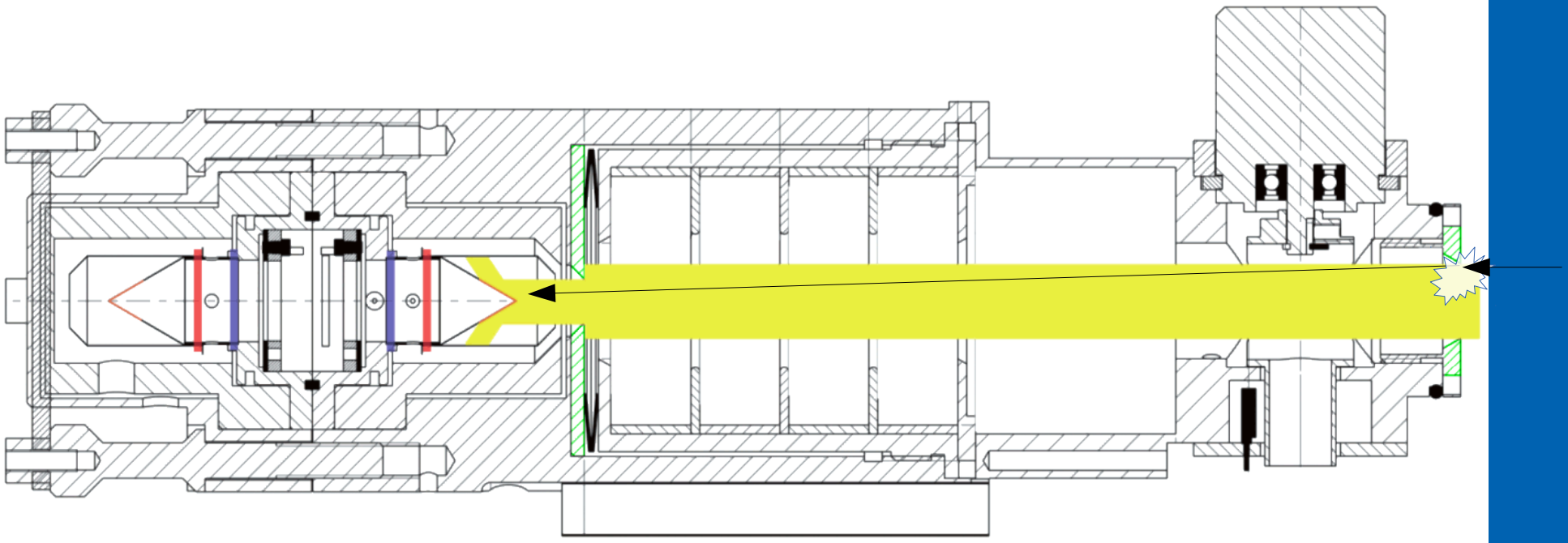

Scattering cross section [mm^2]: $D * \pi * h * \cos(\theta)$

$$\leqslant 8.3 * \pi * 20 * 10^{-3} * 0.009$$

$$\approx 0.005$$

The scattering cross section accounts for ~225 ppm of the area of the radiometric aperture (20 mm^2)
Even 100% scattering efficiency could not increase the irradiance by ~3000 ppm

pmod wrc

Straying Photons

PMO6 Radiometer

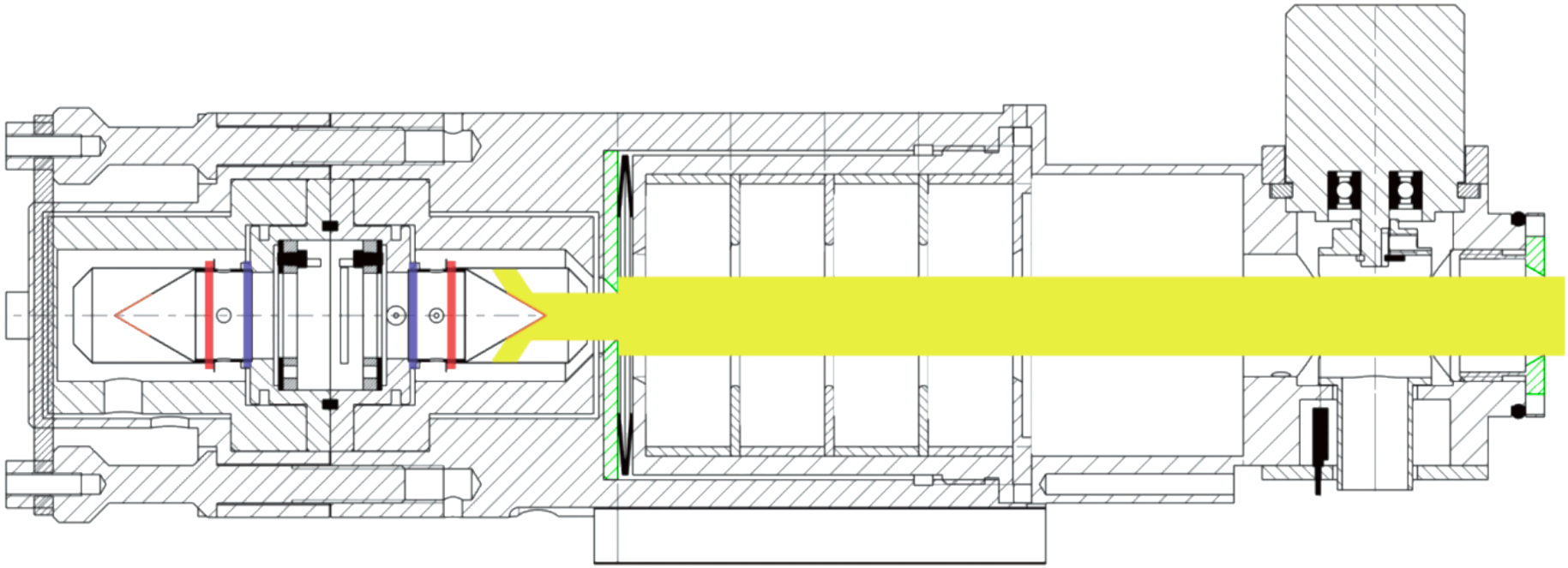

pmod wrc

Straying Photons

PMO6 Radiometer

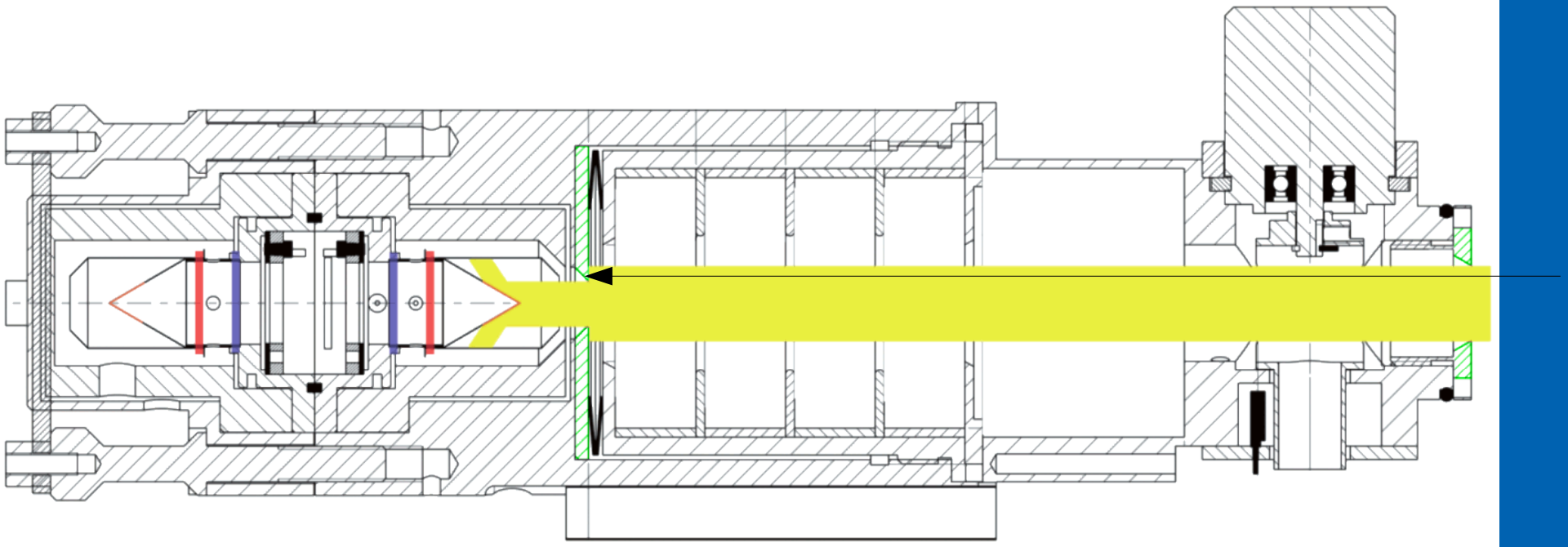

pmod wrc

Straying Photons

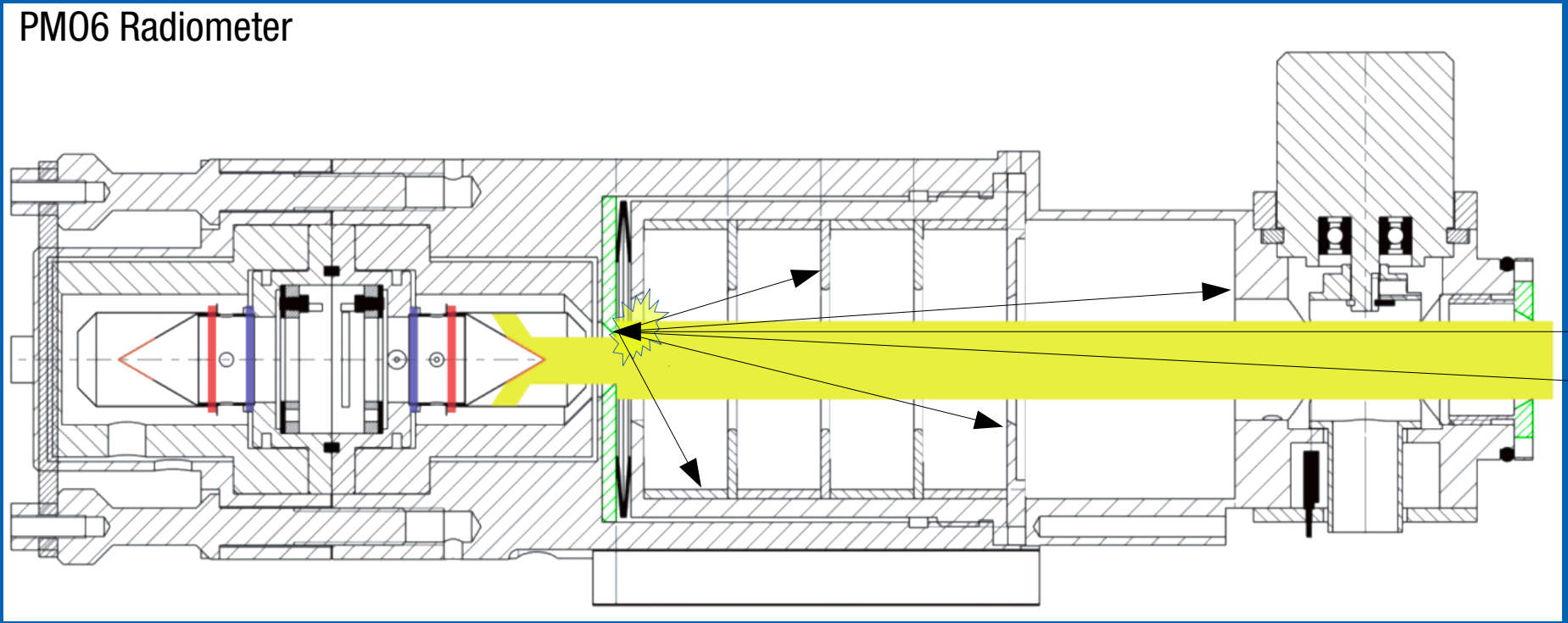

pmod wrc

Straying photons and a shiny aperture

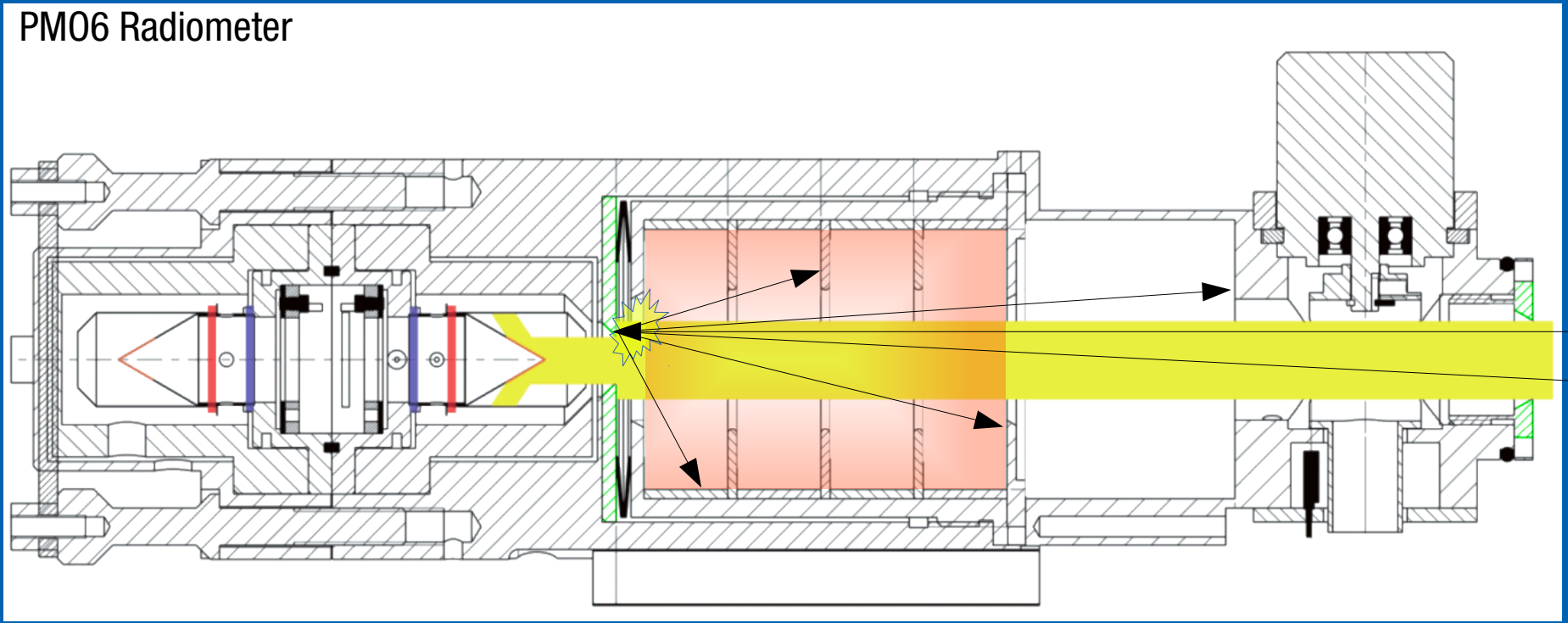

Scattering ratio [TSI]]:

$$(R-r)^2 * \pi * \rho$$

(ρ=reflectance of aperture)

$$\geqslant (4.15-2.5)^2 * \pi * 0.2$$

$$\approx 1.7 \quad (!!!)$$

At least 1.7 times the radiant power which enters the cavity “illuminates” the light baffles. Even a 99.999% efficiency (visible and thermal IR) of the light baffles would still increase the irradiance in the cavity by ~1700 ppm (0.17%).

pmod wrc

Re-determination of stray-light correction for PMO6/PREMOS radiometers at the TRF

	Stray light correction factor	Relative uncertainty
PREMOS-1 (B)	0.998007	0.000342
PREMOS-3 (A)	0.998298	0.000222
VIRGO-2	0.998097	0.000257

Total stray light correction factor measured by expanding the TRF beam from 2 mm to 11 mm (Fehlmann 2011, Fehlmann et al. 2012)

The original determination of the stray light correction factor for PMO6 radiometers yielded 0.99968 (Brusa et al. 1986), which is ~0.17% below the new factor.

pmod wrc

Experimental comparison of scales

- The WRR was compared to cryogenic radiometers at National Metrology Institutes using PMO6-type transfer radiometers
  - Good agreement (~0.1%) in power mode (1991-2010)
  - 0.3% WRR-to-SI discrepancy in irradiance mode at the TRF (2010)

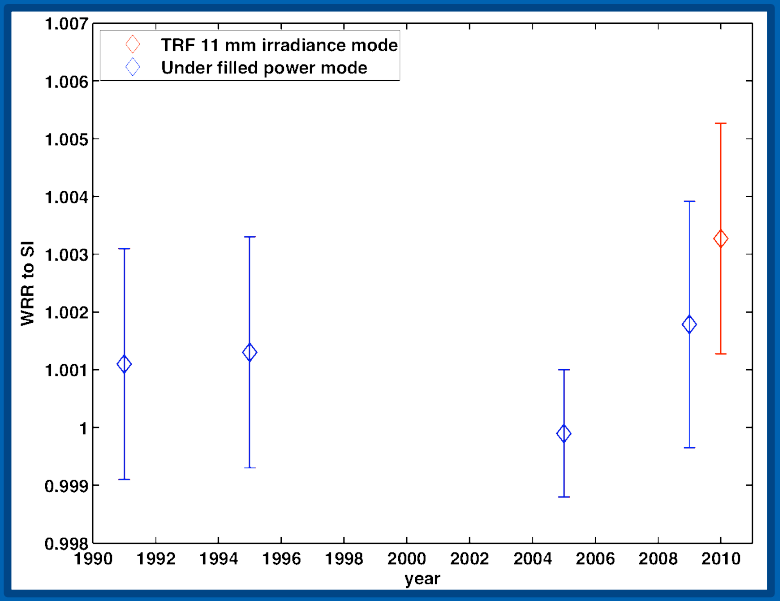

Fehlmann et al. (2012) Metrologia 49

- The incorrect stray-light correction of the PMO6 radiometers prevented the WRR-to-SI discrepancy to become apparent in 1991

pmod wrc

Inverted aperture geometry – The simple solution to a difficult problem

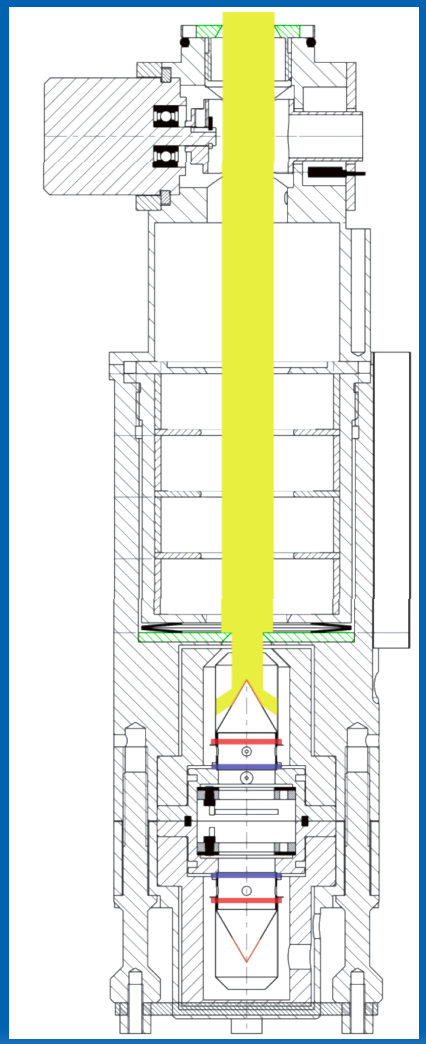

PMO6

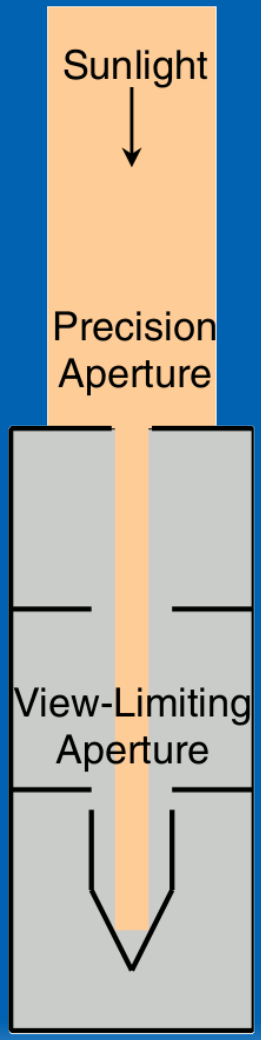

TIM

pmod wrc

CLARA – The successor to the PMO6

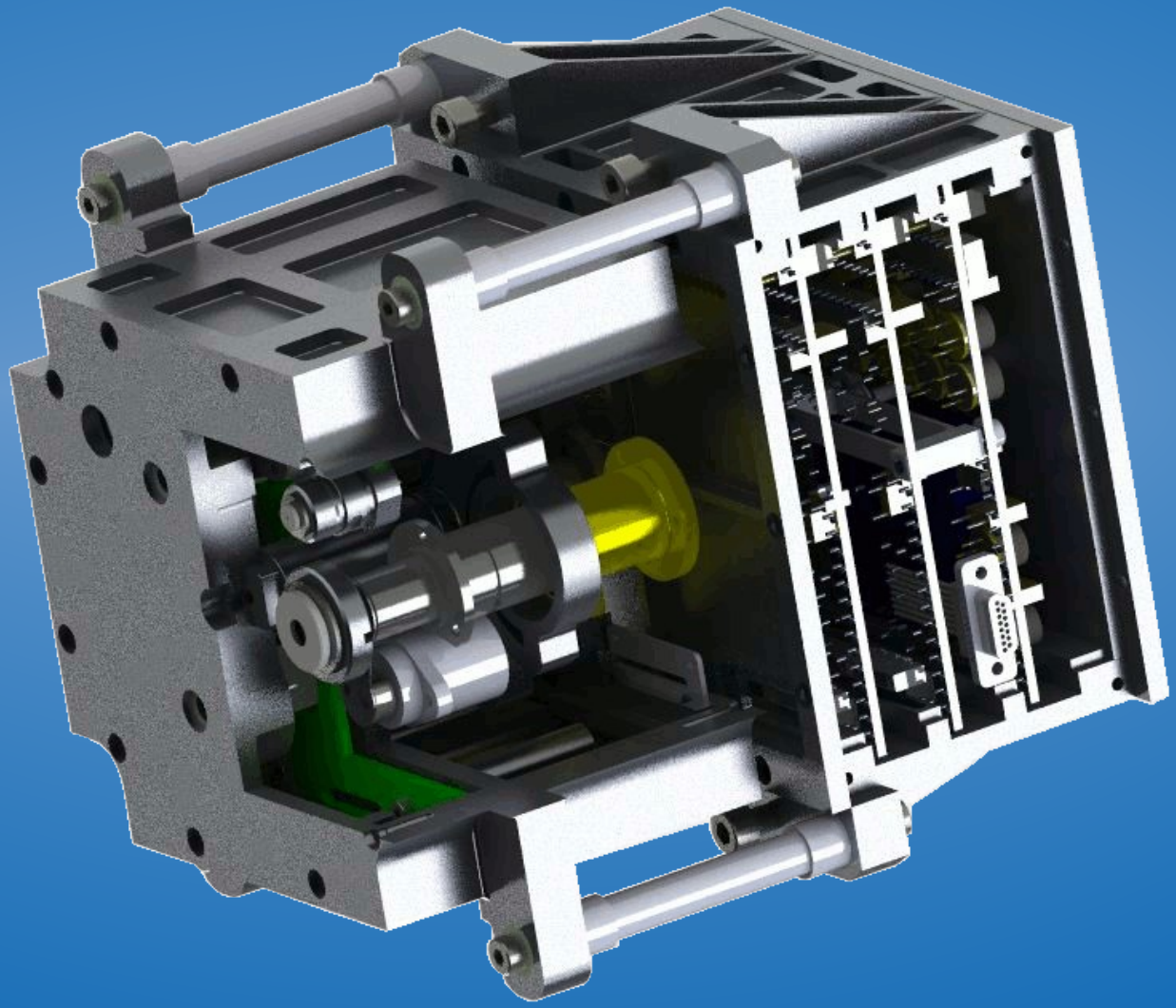

CLARA features inverted aperture geometry, three cavities, low non-equivalence, high cadence, high tolerance to temperature variations, launch on NORSAT-1 in 2015/16.
See poster for details on CLARA!

pmod wrc

DARA – The working prototype for CLARA

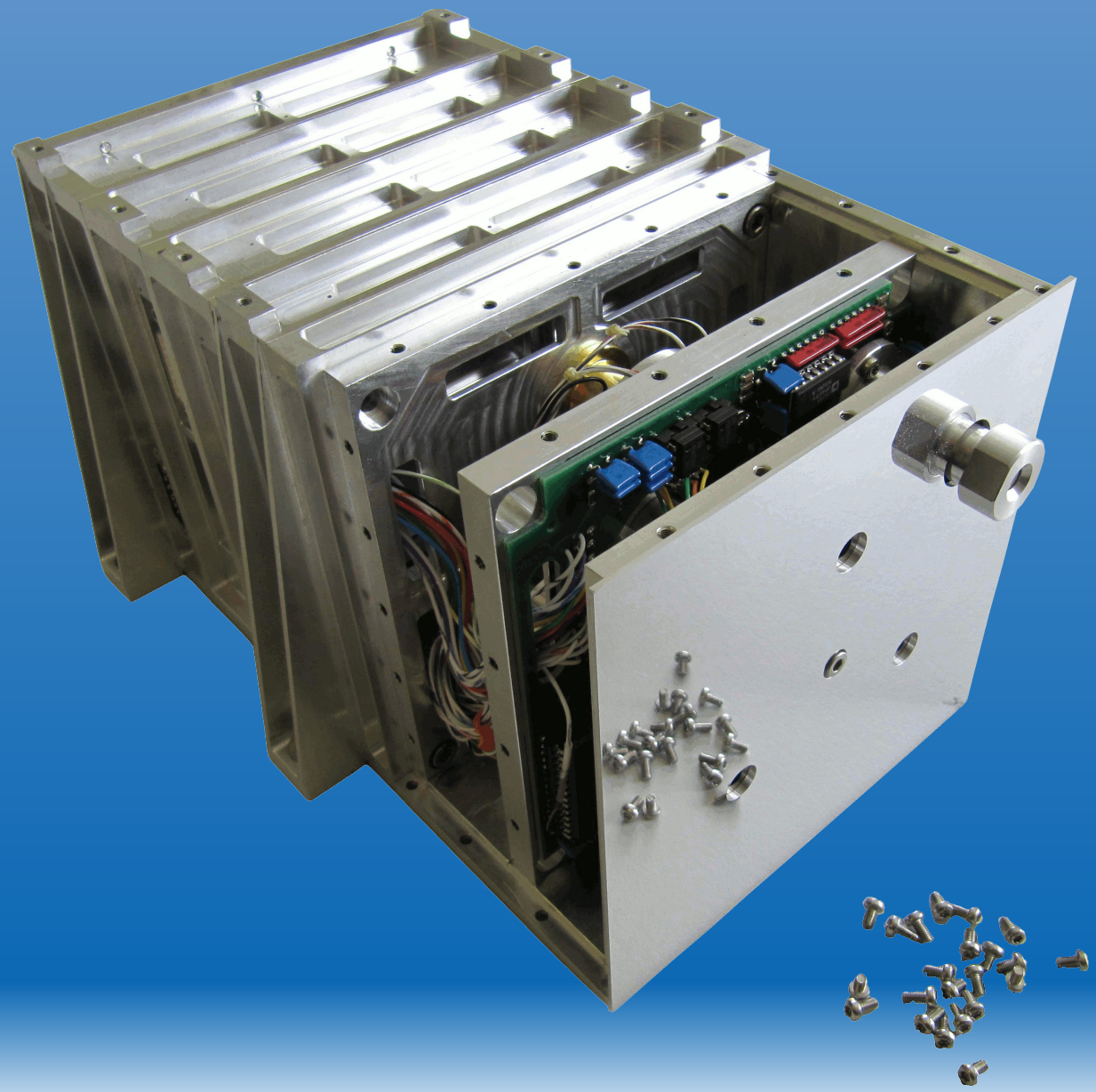

- Built in 2010
- Fully characterized
  - No stray light / scattering correction
  - Air-to-vacuum correction 430 ppm
- Traceable to WRR and TRF
  - Confirming WRR-to-SI differences found by Fehlmann et al. 2012

DARA	Cavity A	Cavity C
WRR/SI(TRF)	1.0030	1.0029
Uncertainty (2σ)	0.0012	0.0012

pmod wrc

The Cryogenic Solar Absolute Radiometer CSAR

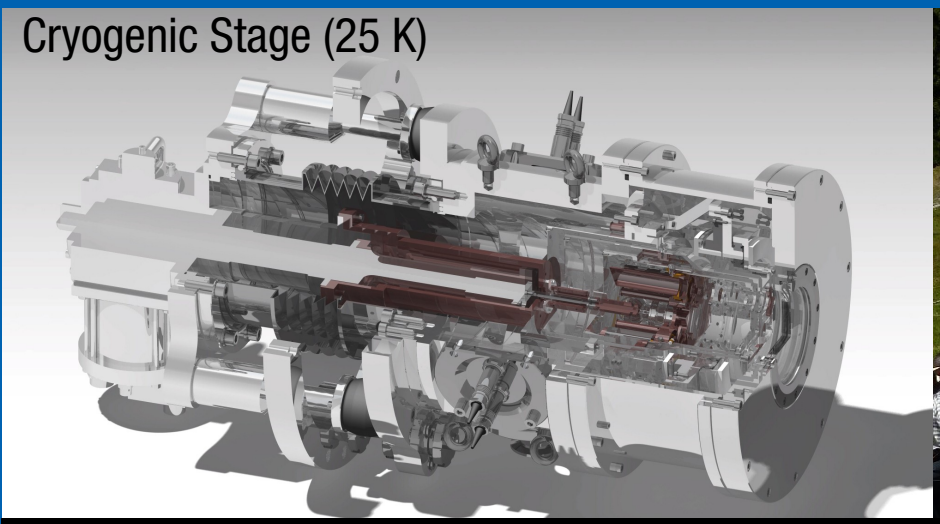

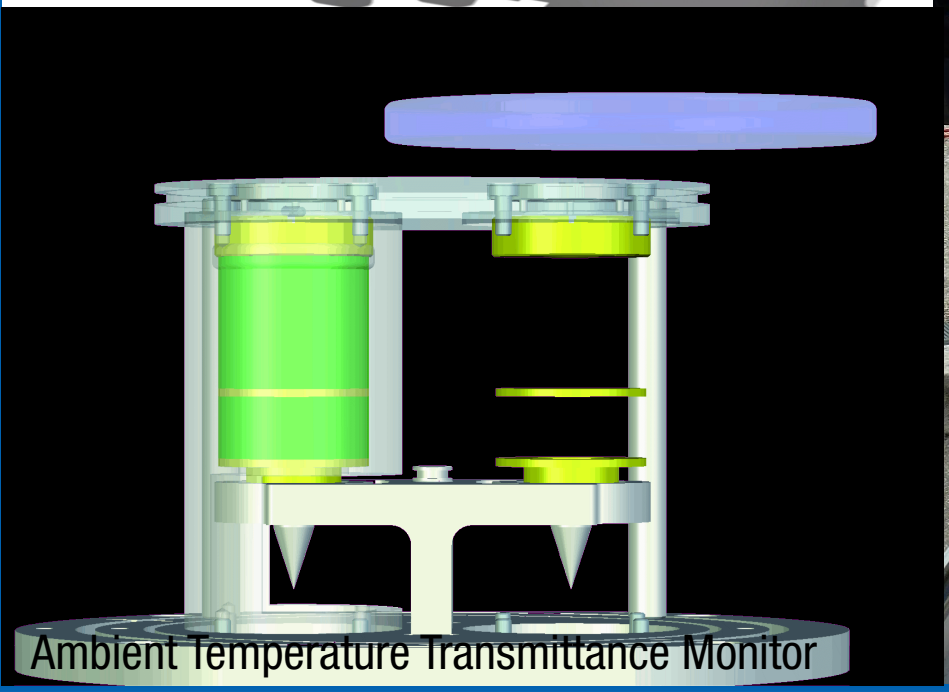

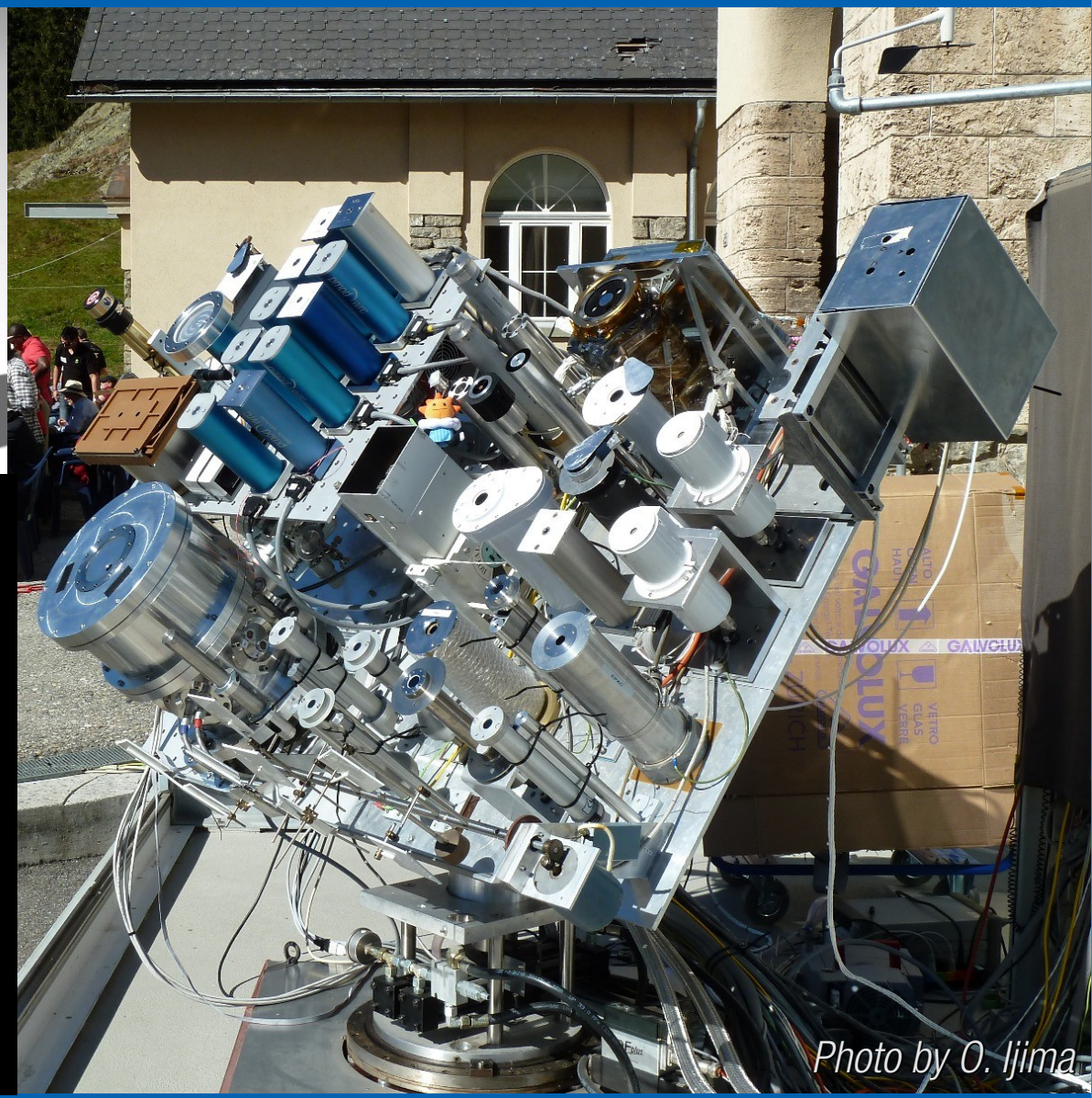

METAS

NPL National Physical Laboratory

pmod wrc

CSAR-WRR difference

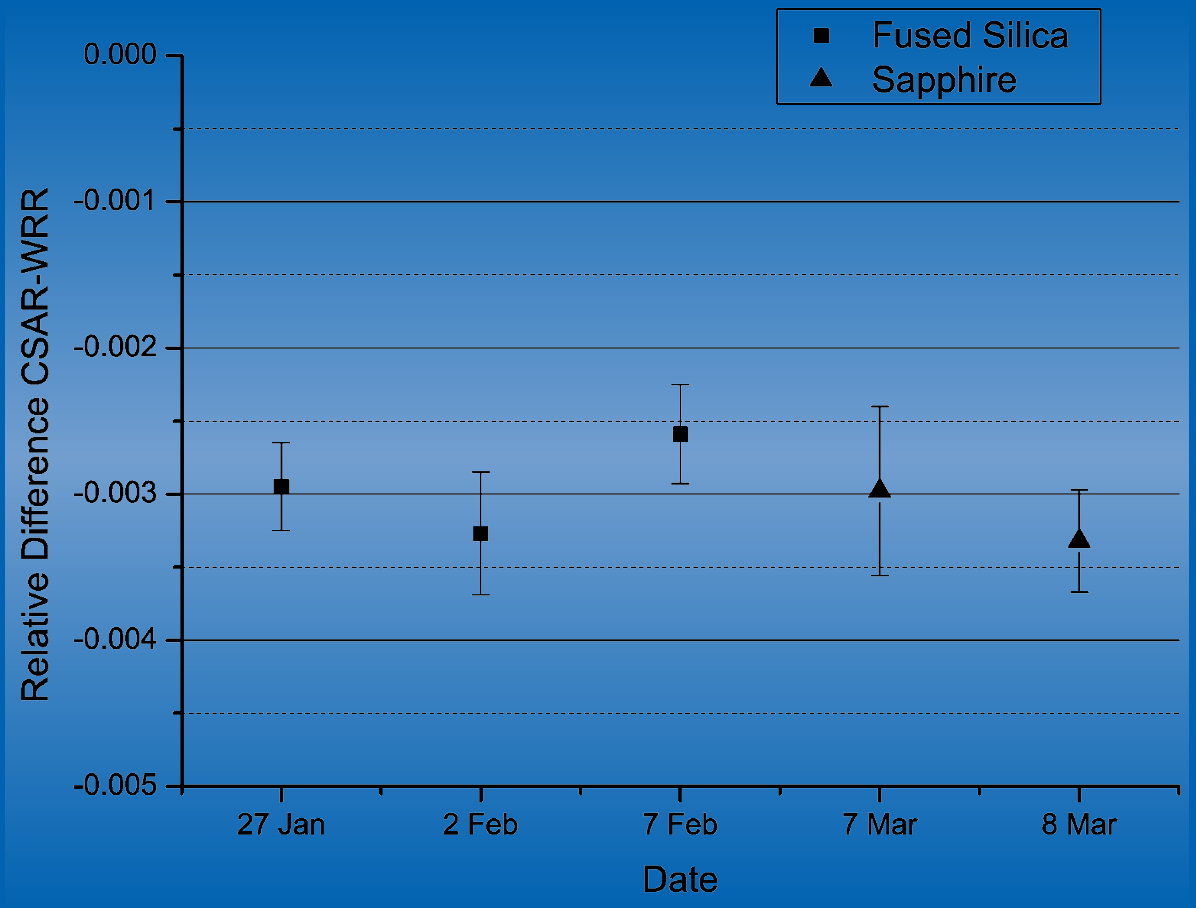

- CSAR results are ~0.3% below WRR
- In line with TRF
- Daily averages were needed to reduce major noise sources
  - Transmittance monitor
  - Cavity heater control
  - Perfectly sunny weather required
- Improved version of transmittance monitor has uncertainy

pmod wrc

Improved transmittance monitor

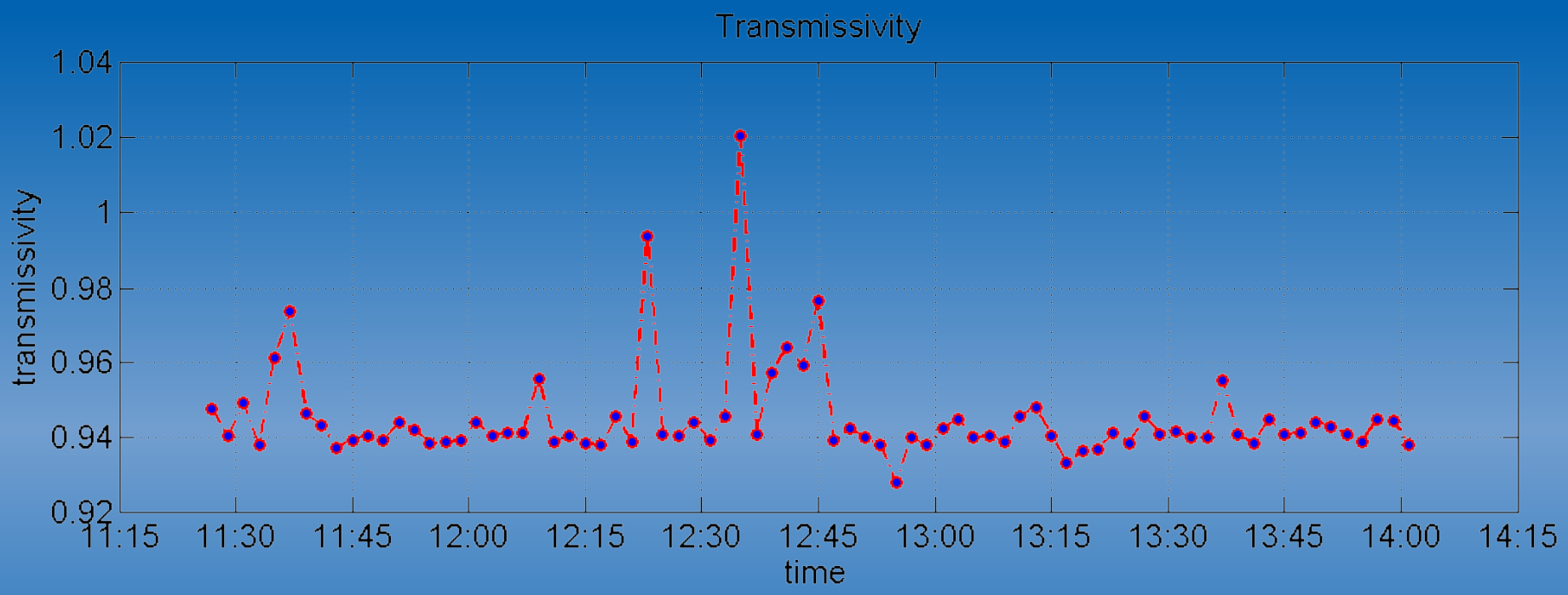

47 ppm (1-σ)

pmod wrc

Conclusions

- TIM/SORCE has triggered major new developments in TSI radiometry
- The disagreement between TIM and other TSI radiometers was caused by different scales
- The scale differences had been concealed by incorrect stray light correction of PMO6
- PMOD/WRC has developed new generations of ambient temperature and cryogenic solar radiometers