Activity ID: Orbit 22 **OAPEL** JULTN279 **SeqNo** 02-

Title UVS AWG feature track **Instrument** UVS

Requestor UVS-AWG/W. KENT TOBISKA **Team** UVS **Working Group** AWG

Time System CDS **Load ID** 22A **Calendar Date** 08/13/99 **Week** 85

Start	JEE+CDS 00001301:00:0	99-225/08:54:15.066	JEE+000/21:55:27.333
End	JEE+CDS 00001305:00:0	99-225/08:58:17.733	JEE+000/21:59:30.000
Duration	00000004:00:0	000/00:04:02.667	000/00:04:02.667

Top Label 22JULTN27902-

Bottom Label realtime

Plot Key	UVS	**Type**	SCI		
CDS Bytes	94	**Report Options**	BOTH	**Scan Platform**	Yes
CDS Source	OAP	**Spin State**	DUAL	**DMS**	Yes

Observation Objective

22JULTN27902: AWG feature track with SSI to look at +51.6 latitude feature.

Rj = 15.3

UVS configuration: full F/F scans.

MBTG = 0.017712

Design Detail

```
PSID  CDS  RIM   COMMAND PARAMETERS
384AA 00   00:00 COMMNT UVS RIM 0
157AA 38  -01:00  CMDRS PLAN_DUR = 3 RIMS; EST_UVS_CMDS = 2 (34UVS)
          00:00      1  UVF:07,SCAN,NORM,NORM,NORM,SAME,0,ON,OFF,OFF,ON,OFF,NOOVR,1,00,9C,00,00
          02:00      3  OFF:07,SCAN,NORM,NORM,NORM,SAME,0,ON,OFF,OFF,OFF,OFF,NOOVR,1,00,9C,00,00
349AA 28  00:69 UVFLSH DISCRD,UVS
165IP 00  02:00 TARGET Lat/Lon = 51.54/284.11; SSI target (RA/Dec=90.31/27.98)
349AB 28  02:69 UVFLSH PACKET,UVS
```

2C, 01

OK

Tue Sep 14 21:12:27 1999

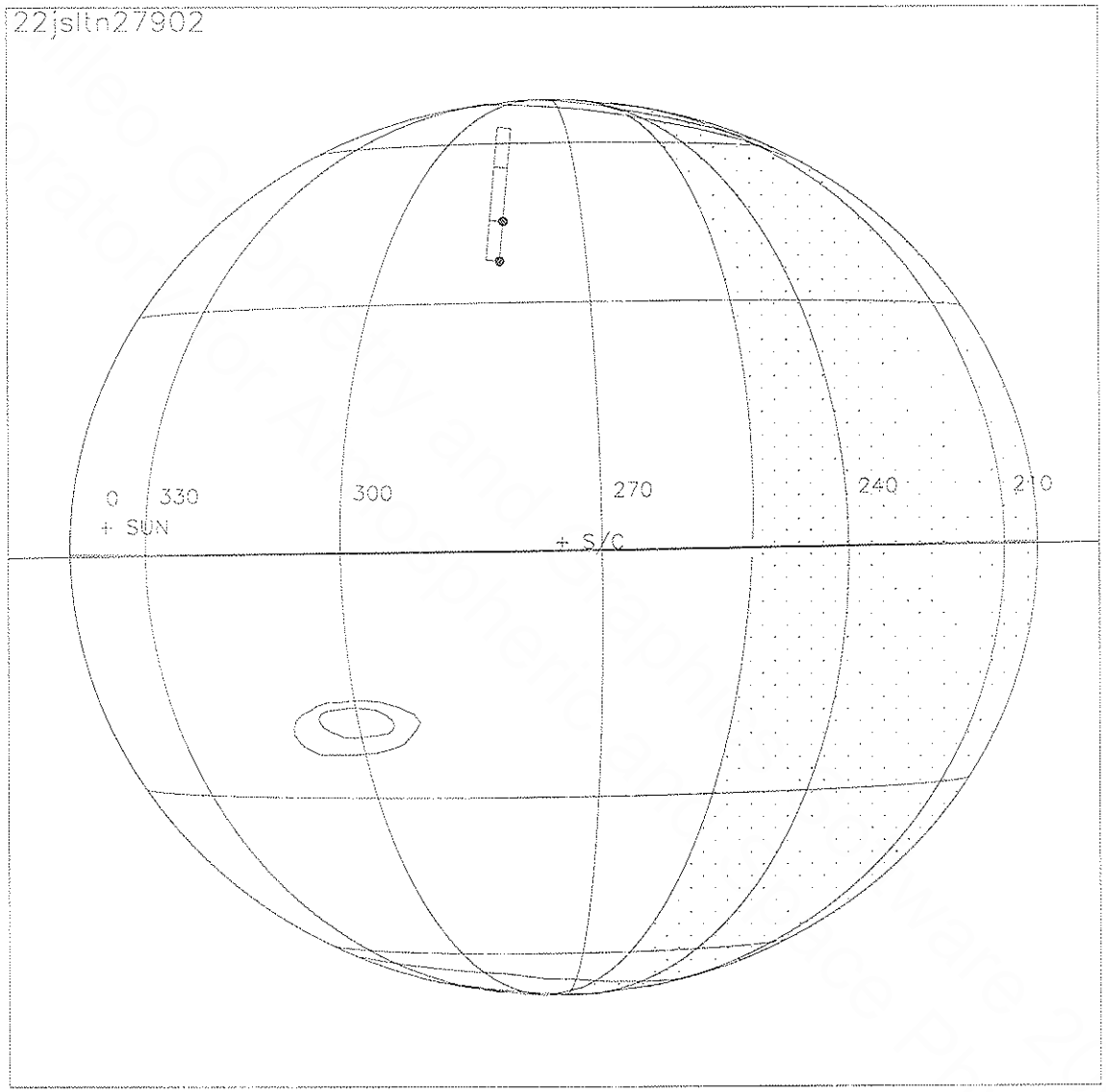

Start UTC_TIME : 1999-225 // 08:54:15.066
No End Time :
Start SCLK : 1/05124163:06:1:6

Target Body : JUPITER
Target Ra/Dec : 89.85/ 25.30 Deg
S/C to Body Center : 1130991. Km (15.819822 Rj)
Z-axis Pointing (Ra / Dec) : 211.19 / -11.27 Deg

Activity ID: Orbit 22 **OAPEL** JUNEB282 **SeqNo** 02-

Title UVS AWG feature track **Instrument** UVS

Requestor UVS-AWG/W. KENT TOBISKA **Team** UVS **Working Group** AWG

Time System CDS **Load ID** 22A **Calendar Date** 08/13/99 **Week** 85

Start	JEE+CDS 00001316:00:0	99-225/09:09:25.066	JEE+000/22:10:37.333
End	JEE+CDS 00001320:00:0	99-225/09:13:27.733	JEE+000/22:14:40.000
Duration	00000004:00:0	000/00:04:02.667	000/00:04:02.667

Top Label 22JUNEB28202-

Bottom Label realtime

Plot Key	UVS	**Type**	SCI		
CDS Bytes	94	**Report Options**	BOTH	**Scan Platform**	Yes
CDS Source	OAP	**Spin State**	DUAL	**DMS**	Yes

Observation Objective

22JUNEB28202: AWG feature track with SSI to look at +12.0 latitude feature.

Rj = 15.8

UVS configuration: full F/F scans.

MBTG = 0.017712

Design Detail

```
PSID   CDS   RIM   COMMAND PARAMETERS
384AB 00   00:00 COMMNT UVS RIM 0
157AB 38 -01:00  CMDRS PLAN_DUR = 3 RIMS; EST_UVS_CMDS = 2 (34UVS)
         00:00      1  UVF:07,SCAN,NORM,NORM,NORM,SAME,0,ON,OFF,OFF,ON,OFF,NOOVR,1,00,9C,00,00
         02:00      3  OFF:07,SCAN,NORM,NORM,NORM,SAME,0,ON,OFF,OFF,OFF,OFF,NOOVR,1,00,9C,00,00
349AC 28   00:69 UVFLSH DISCRD,UVS
165IR 00   02:00 TARGET Lat/Lon = 12.05/284.98; SSI target (RA/Dec=90.41/25.98)
349AD 28   02:69 UVFLSH PACKET,UVS
```

Tue Sep 14 21:17:53 1999

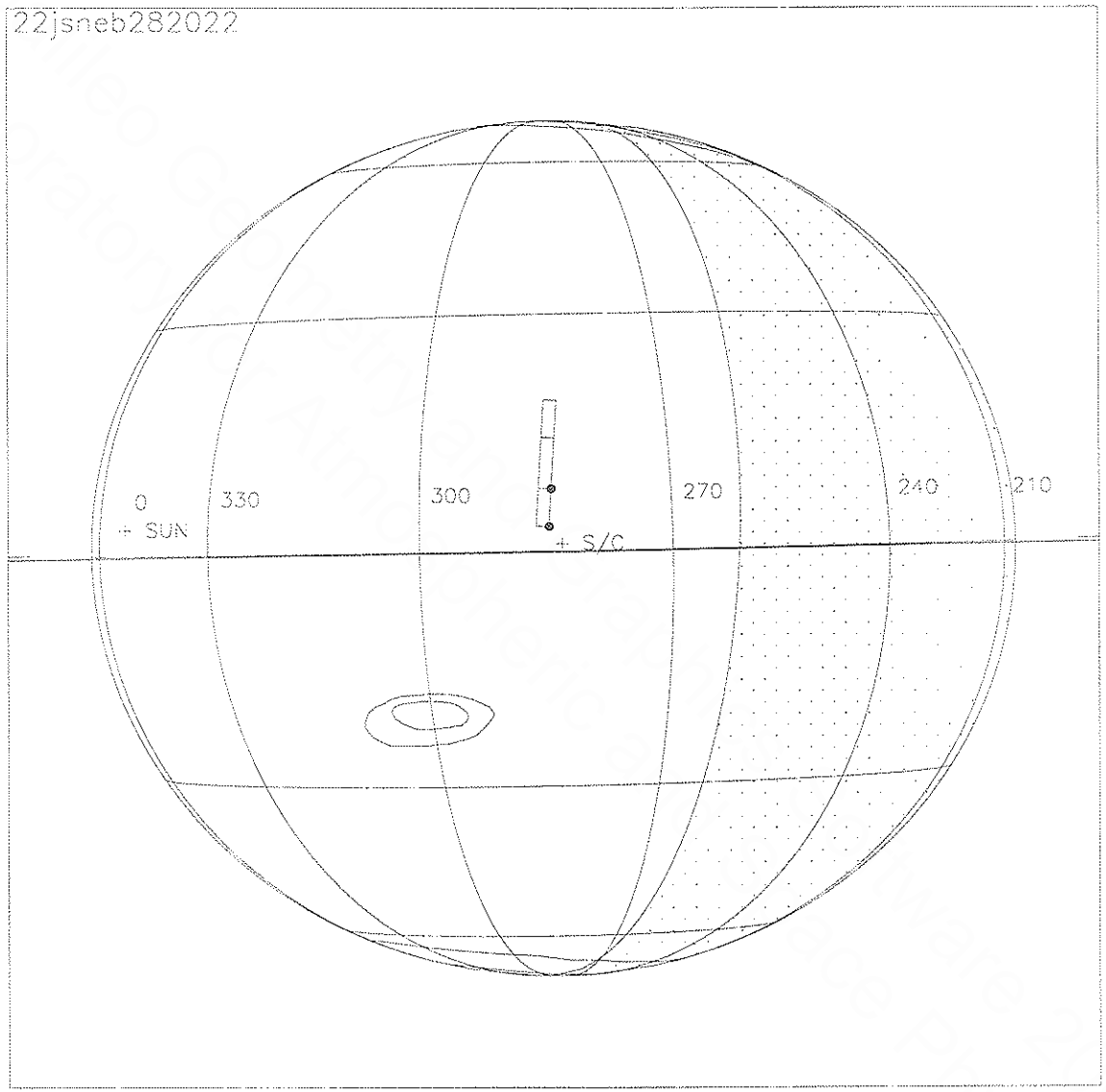

Start UTC_TIME : 1999-225 // 09:09:25.066
No End Time :
Start SCLK : 1/05124178:06:1:6

Target Body : JUPITER
Target Ra/Dec : 90.34/ 25.30 Deg
S/C to Body Center : 1139687. Km (15.941460 RJ)
Z-axis Pointing (Ra / Dec) : 211.19 / -11.27 Deg

Tue Sep 14 21:20:44 1999

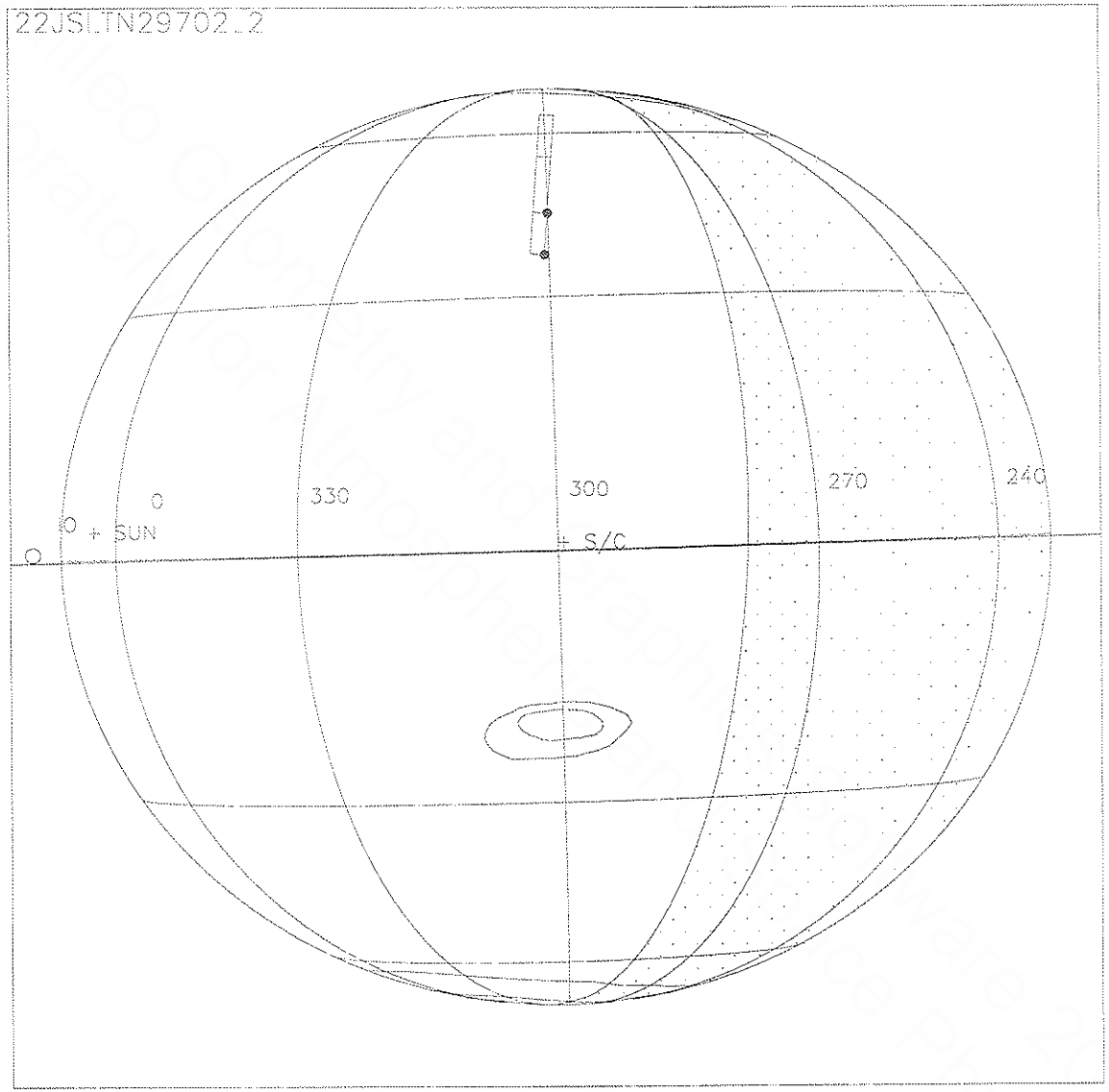

Start UTC_TIME : 1999-225 // 09:37:35.123
No End Time :
Start SCLK : 1/05124205:84:2:5

Target Body : JUPITER
Target Ra/Dec : 91.24/ 25.28 Deg
S/C to Body Center : 1155805. Km (16.166908 Rj)
Z-axis Pointing (Ra / Dec) : 211.19 / -11.27 Deg

Activity ID: Orbit 22 **OAPEL** JULTN297 **SeqNo** 02-

Title UVS AWG feature track **Instrument** UVS

Requestor UVS-AWG/W. KENT TOBISKA **Team** UVS **Working Group** AWG

Time System CDS **Load ID** 22A **Calendar Date** 08/13/99 **Week** 85

Start	JEE+CDS 00001333:00:0	99-225/09:26:36.399	JEE+000/22:27:48.666
End	JEE+CDS 00001337:00:0	99-225/09:30:39.066	JEE+000/22:31:51.333
Duration	00000004:00:0	000/00:04:02.667	000/00:04:02.667

Top Label 22JULTN29702-

Bottom Label realtime

Plot Key	UVS	**Type**	SCI		
CDS Bytes	94	**Report Options**	BOTH	**Scan Platform**	Yes
CDS Source	OAP	**Spin State**	DUAL	**DMS**	Yes

Observation Objective

22JULTN29702: AWG feature track with SSI to look at +51.6 latitude feature.

Rj = 15.9

UVS configuration: full F/F scans.

MBTG = 0.017712

Design Detail

```
PSID   CDS   RIM   COMMAND PARAMETERS
384AC  00   00:00  COMMNT UVS RIM 0
157AC  38  -01:00   CMDRS PLAN_DUR = 3 RIMS; EST_UVS_CMDS = 2 (34UVS)
           00:00       1   UVF:07,SCAN,NORM,NORM,NORM,SAME,0,ON,OFF,OFF,ON,OFF,NOOVR,1,00,9C,00,00
           02:00       3   OFF:07,SCAN,NORM,NORM,NORM,SAME,0,ON,OFF,OFF,OFF,OFF,NOOVR,1,00,9C,00,00
349AE  28   00:69  UVFLSH  DISCRD,UVS
165IU  00   02:00  TARGET  Lat/Lon = 51.54/302.12; SSI target (RA/Dec=91.34/27.91)
349AF  28   02:69  UVFLSH  PACKET,UVS
```

Tue Sep 14 22:00:40 1999

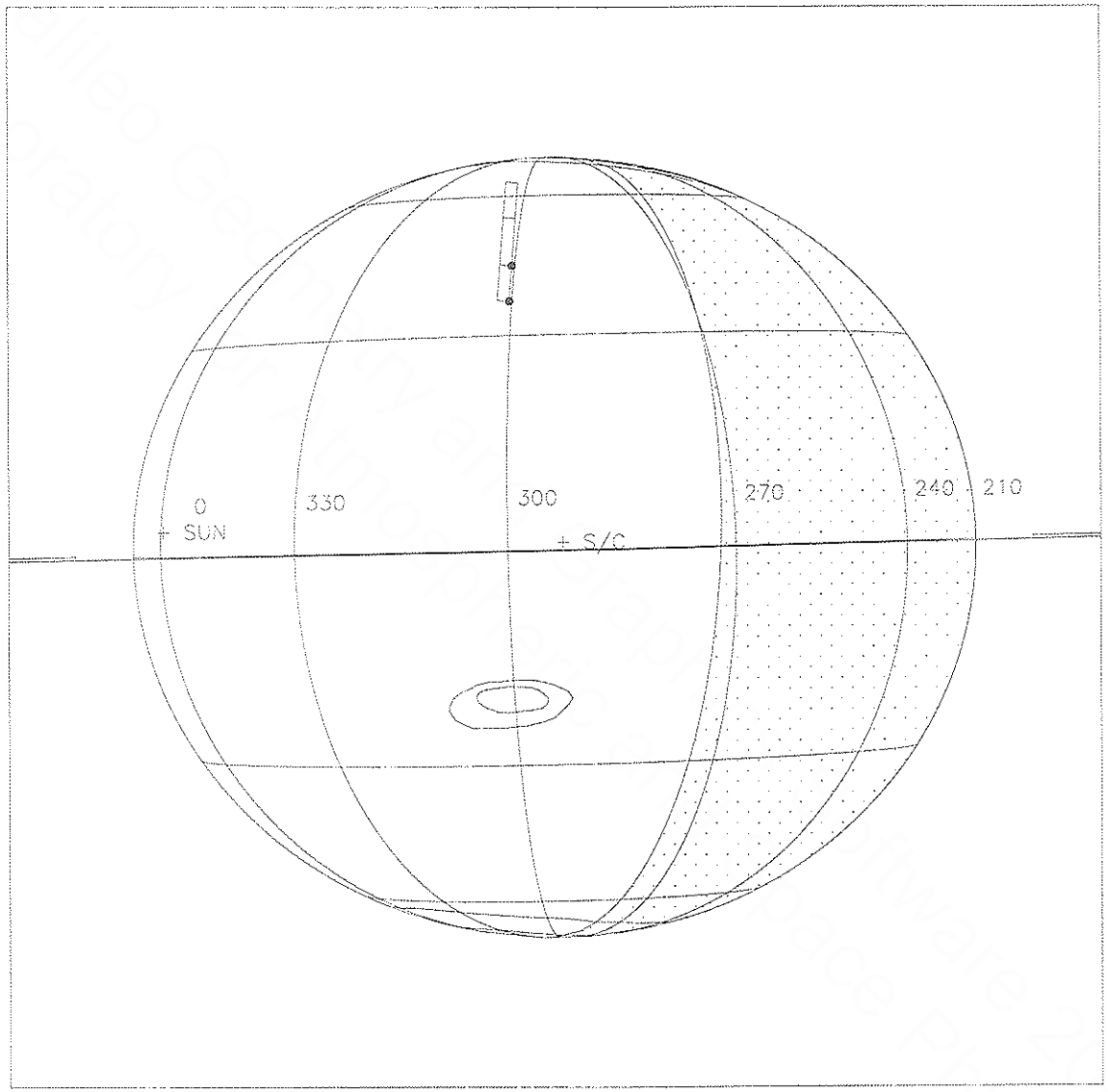

Start UTC_TIME : 1999-225 // 09:26:36.399
No End Time :
Start SCLK : 1/05124195:06:1:6

Target Body : JUPITER
Target Ra/Dec : 90.90/ 25.29 Deg
S/C to Body Center : 1149528. Km (16.079108 Rj)
Z-axis Pointing (Ra / Dec) : 211.19 / -11.27 Deg

Activity ID: Orbit 22 **OAPEL** JUNEB297 **SeqNo** 02-

Title UVS AWG feature track **Instrument** UVS

Requestor UVS-AWG/W. KENT TOBISKA **Team** UVS **Working Group** AWG

Time System CDS **Load ID** 22A **Calendar Date** 08/13/99 **Week** 85

Start	JEE+CDS 00001337:00:0	99-225/09:30:39.066	JEE+000/22:31:51.333
End	JEE+CDS 00001341:00:0	99-225/09:34:41.733	JEE+000/22:35:54.000
Duration	00000004:00:0	000/00:04:02.667	000/00:04:02.667

Top Label 22JUNEB29702-

Bottom Label realtime

Plot Key	UVS	**Type**	SCI		
CDS Bytes	94	**Report Options**	BOTH	**Scan Platform**	Yes
CDS Source	OAP	**Spin State**	DUAL	**DMS**	Yes

Observation Objective

22JUNEB29702: AWG feature track with SSI to look at +12.0 latitude feature.

Rj = 16.0

UVS configuration: full F/F scans.

MBTG = 0.017712

Design Detail

```
PSID   CDS   RIM   COMMAND PARAMETERS
384AE  00   00:00  COMMNT UVS RIM 0
157AE  38  -01:00   CMDRS PLAN_DUR = 3 RIMS; EST_UVS_CMDS = 2 (34UVS)
           00:00       1   UVF:07,SCAN,NORM,NORM,NORM,SAME,0,ON,OFF,OFF,ON,OFF,NOOVR,1,00,9C,00,00
           02:00       3   OFF:07,SCAN,NORM,NORM,NORM,SAME,0,ON,OFF,OFF,OFF,OFF,NOOVR,1,00,9C,00,00
349AI  28   00:69  UVFLSH  DISCRD,UVS
165IV  00   02:00  TARGET  Lat/Lon = 12.05/300.01; SSI target (RA/Dec=91.30/25.96)
349AU  28   02:69  UVFLSH  PACKET,UVS
```

Tue Sep 14 22:02:13 1999

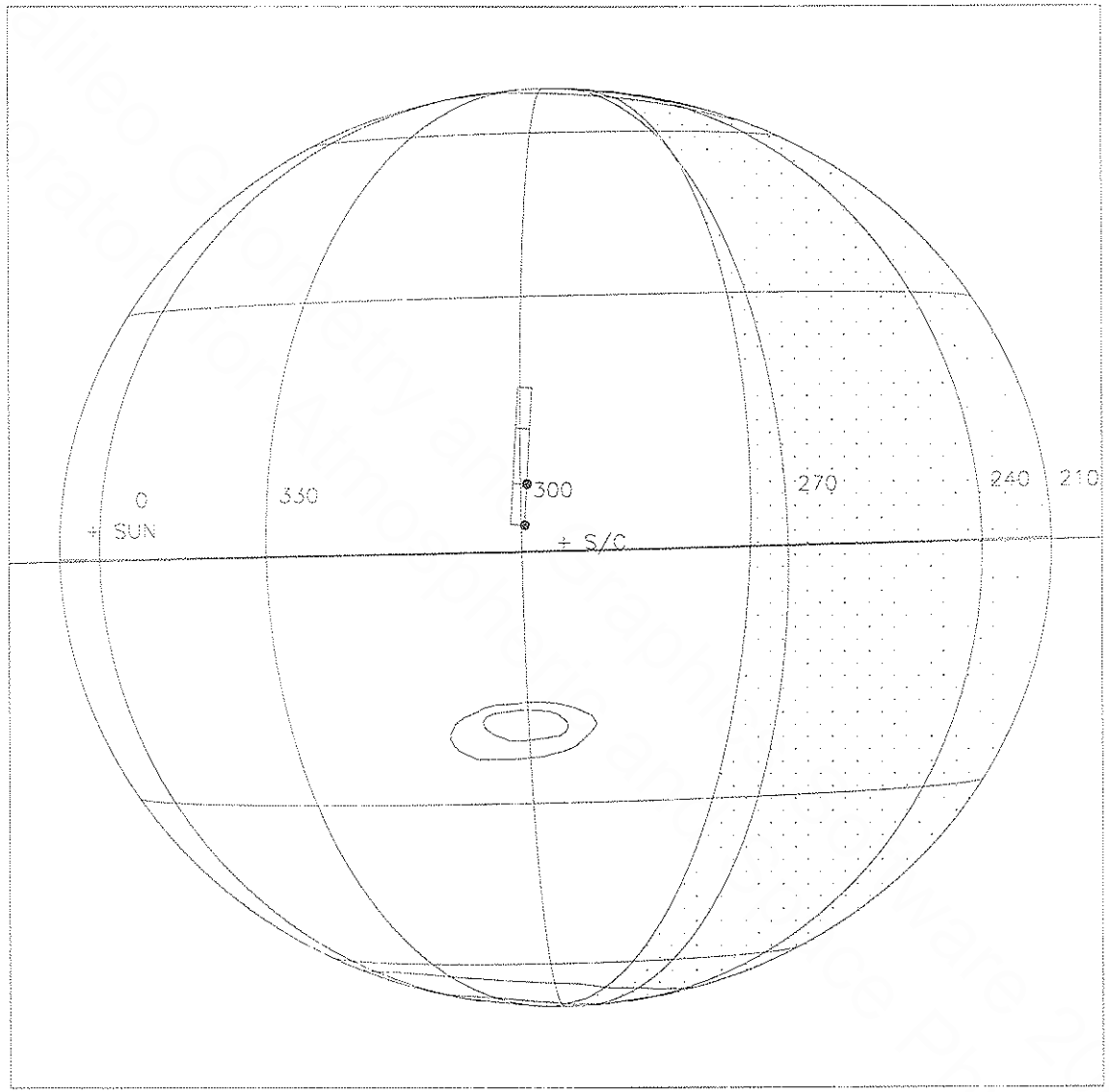

Start UTC_TIME : 1999-225 // 09:30:39.399
No End Time :
Start SCLK : 1/05124199:06:6:6

Target Body : JUPITER
Target Ra/Dec : 91.02/ 25.29 Deg
S/C to Body Center : 1151844. Km (16.111508 R_J)
Z-axis Pointing (Ra / Dec) : 211.19 / -11.27 Deg

Activity ID: Orbit 22 **OAPEL** JUHTS260 **SeqNo** 02-

Title UVS AWG feature track **Instrument** UVS

Requestor UVS-AWG/W. KENT TOBISKA **Team** UVS **Working Group** AWG

Time System CDS **Load ID** 22A **Calendar Date** 08/13/99 **Week** 85

Start	JEE+CDS 00001345:00:0	99-225/09:38:44.399	JEE+000/22:39:56.666
End	JEE+CDS 00001349:00:0	99-225/09:42:47.066	JEE+000/22:43:59.333
Duration	00000004:00:0	000/00:04:02.667	000/00:04:02.667

Top Label 22JUHTS26002-

Bottom Label realtime

Plot Key UVS **Type** SCI

CDS Bytes 94 **Report Options** BOTH **Scan Platform** Yes

CDS Source OAP **Spin State** DUAL **DMS** Yes

Observation Objective

22JUHTS26002: AWG feature track with SSI to look at -33.7 latitude feature.

Rj = 16.1

UVS configuration: full F/F scans.

MBTG = 0.017712

Design Detail

```
PSID   CDS   RIM   COMMAND PARAMETERS
384AD 00   00:00 COMMNT UVS RIM 0
157AD 38 -01:00   CMDRS PLAN_DUR = 3 RIMS; EST_UVS_CMDS = 2 (34UVS)
          00:00       1  UVF:07,SCAN,NORM,NORM,NORM,SAME,0,ON,OFF,OFF,ON,OFF,NOOVR,1,00,9C,00,00
          02:00       3  OFF:07,SCAN,NORM,NORM,NORM,SAME,0,ON,OFF,OFF,OFF,OFF,NOOVR,1,00,9C,00,00
349AG 28   00:69 UVFLSH DISCRD,UVS
165IX 00   02:00 TARGET Lat/Lon = -33.64/265.25 (darkside); SSI target (RA/Dec=89.24/23.48)
349AH 28   02:69 UVFLSH PACKET,UVS
```

Tue Sep 14 21:24:56 1999

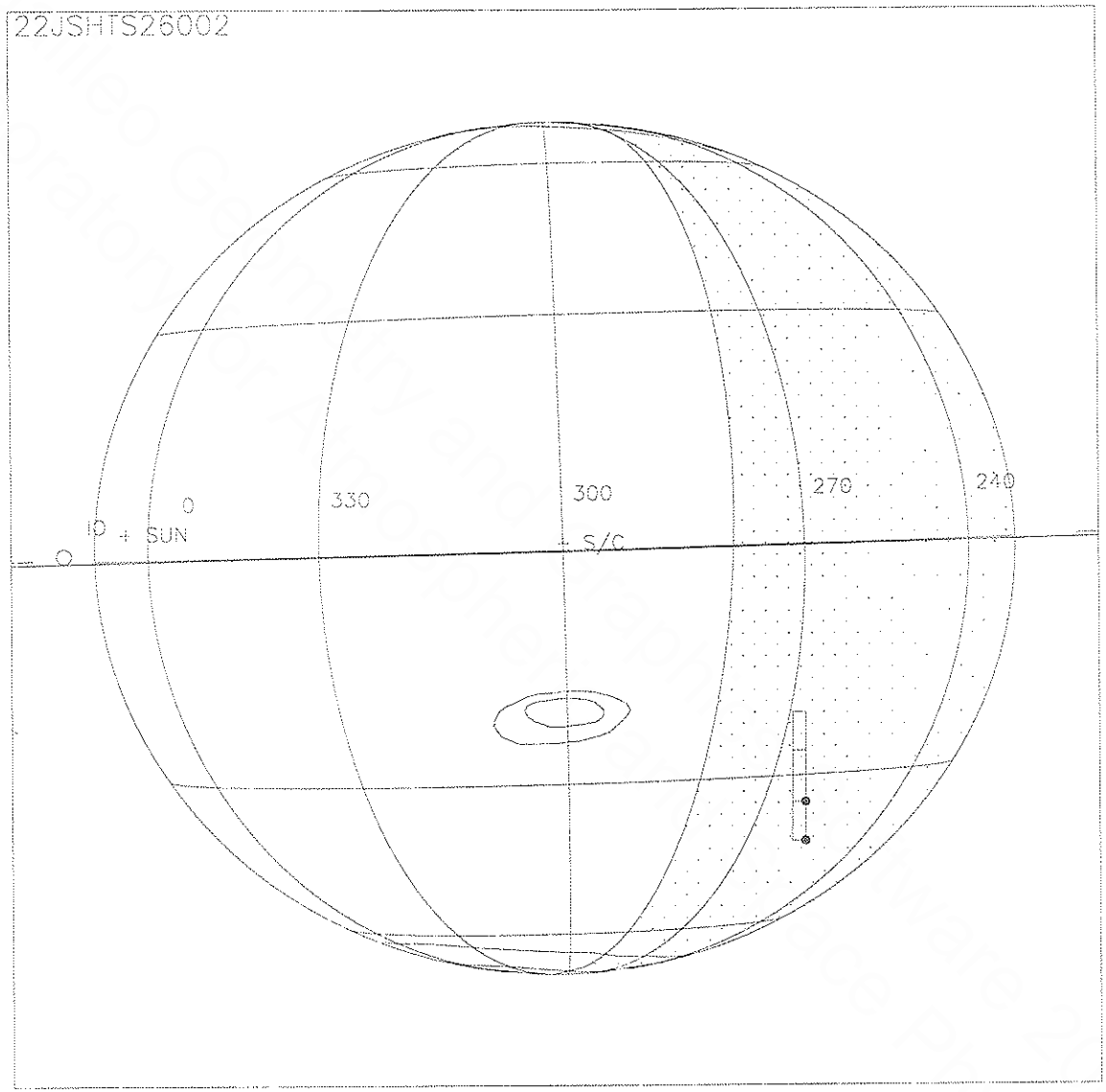

Start UTC_TIME : 1999-225 // 09:38:44.399
No End Time :
Start SCLK : 1/05124207:06:1:0

Target Body : JUPITER
Target Ra/Dec : 91.28/ 25.28 Deg
S/C to Body Center : 1156464. Km (16.175136 Rj)
Z-axis Pointing (Ra / Dec) : 211.19 / -11.27 Deg

Activity ID:	Orbit 22	OAPEL	JUNEB312	SeqNo	02-
Title	UVS AWG feature track			Instrument	UVS
Requestor	UVS-AWG/W. KENT TOBISKA	Team	UVS	Working Group	AWG

Time System	CDS	Load ID	22A	Calendar Date	08/13/99 Week 85

Start	JEE+CDS 00001364:00:0	99-225/09:57:57.066	JEE+000/22:59:09.333
End	JEE+CDS 00001368:00:0	99-225/10:01:59.733	JEE+000/23:03:12.000
Duration	00000004:00:0	000/00:04:02.667	000/00:04:02.667

Top Label	22JUNEB31202-				
Bottom Label	realtime				
Plot Key	UVS	Type	SCI		
CDS Bytes	94	Report Options	BOTH	Scan Platform	Yes
CDS Source	OAP	Spin State	DUAL	DMS	Yes

Observation Objective

22JUNEB31202: AWG feature track with SSI to look at +12.0 latitude feature.

Rj = 16.3

UVS configuration: full F/F scans.

MBTG = 0.017712

Design Detail

```
PSID   CDS   RIM   COMMAND PARAMETERS
384AF  00   00:00  COMMNT UVS RIM 0
157AF  38  -01:00   CMDRS PLAN_DUR = 3 RIMS; EST_UVS_CMDS = 2 (34UVS)
           00:00       1   UVF:07,SCAN,NORM,NORM,NORM,SAME,0,ON,OFF,OFF,ON,OFF,NOOVR,1,00,9C,00,00
           02:00       3   OFF:07,SCAN,NORM,NORM,NORM,SAME,0,ON,OFF,OFF,OFF,OFF,NOOVR,1,00,9C,00,00
349AK  28   00:69  UVFLSH DISCRD,UVS
165IY  00   02:00  TARGET Lat/Lon = 12.04/315.04; SSI target (RA/Dec=92.10/25.93)
349AL  28   02:69  UVFLSH PACKET,UVS
```

Tue Sep 14 21:26:12 1999

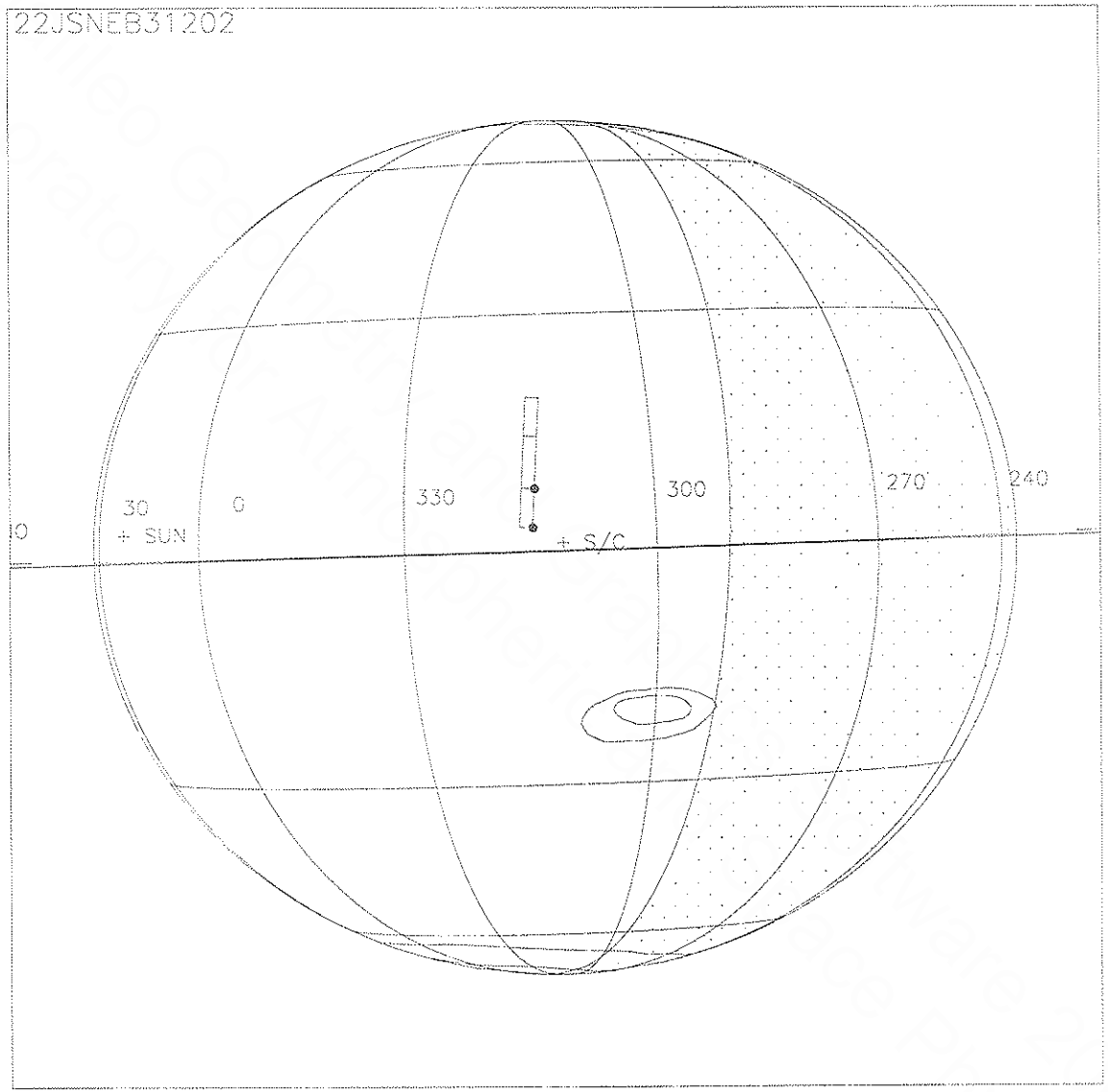

Start UTC_TIME : 1999-225 // 09:57:57.399
No End Time .
Start SCLK : 1/05124226:06:6:6

Target Body : JUPITER
Target Ra/Dec : 91.88/ 25.27 Deg
S/C to Body Center : 1187434. Km (16.329572 Rj)
Z-axis Pointing (Ra / Dec) : 211.19 / -11.27 Deg

Activity ID:	Orbit 22	OAPEL JUNEB327	SeqNo 02-
Title	UVS AWG feature track		Instrument UVS
Requestor	UVS-AWG/W. KENT TOBISKA	Team UVS	Working Group AWG

Time System CDS	Load ID 22A	Calendar Date 08/13/99	Week 85		
Start	JEE+CDS 00001389:00:0	99-225/10:23:13.733	JEE+000/23:24:26.000		
End	JEE+CDS 00001393:00:0	99-225/10:27:16.399	JEE+000/23:28:28.666		
Duration	00000004:00:0	000/00:04:02.666	000/00:04:02.666		

Top Label	22JUNEB32702-				
Bottom Label	realtime				
Plot Key	UVS	Type	SCI		
CDS Bytes	94	Report Options	BOTH	Scan Platform	Yes
CDS Source	OAP	Spin State	DUAL	DMS	Yes

Observation Objective

22JUNEB32702: AWG feature track with SSI to look at +12.0 latitude feature.

Rj = 16.5

UVS configuration: full F/F scans.

MBTG = 0.017712

Design Detail

```
PSID   CDS   RIM   COMMAND PARAMETERS
384AG  00    00:00 COMMNT UVS RIM 0
157AG  38   -01:00  CMDRS PLAN_DUR = 3 RIMS; EST_UVS_CMDS = 2 (34UVS)
            00:00      1  UVF:07,SCAN,NORM,NORM,NORM,SAME,0,ON,OFF,OFF,ON,OFF,NOOVR,1,00,9C,00,00
            02:00      3  OFF:07,SCAN,NORM,NORM,NORM,SAME,0,ON,OFF,OFF,OFF,OFF,NOOVR,1,00,9C,00,00
349AM  28    00:69 UVFLSH DISCRD,UVS
165JB  00    02:00 TARGET Lat/Lon = 12.04/330.14; SSI target (RA/Dec=92.91/25.90)
349AN  28    02:69 UVFLSH PACKET,UVS
```

Tue Sep 14 21:27:21 1999

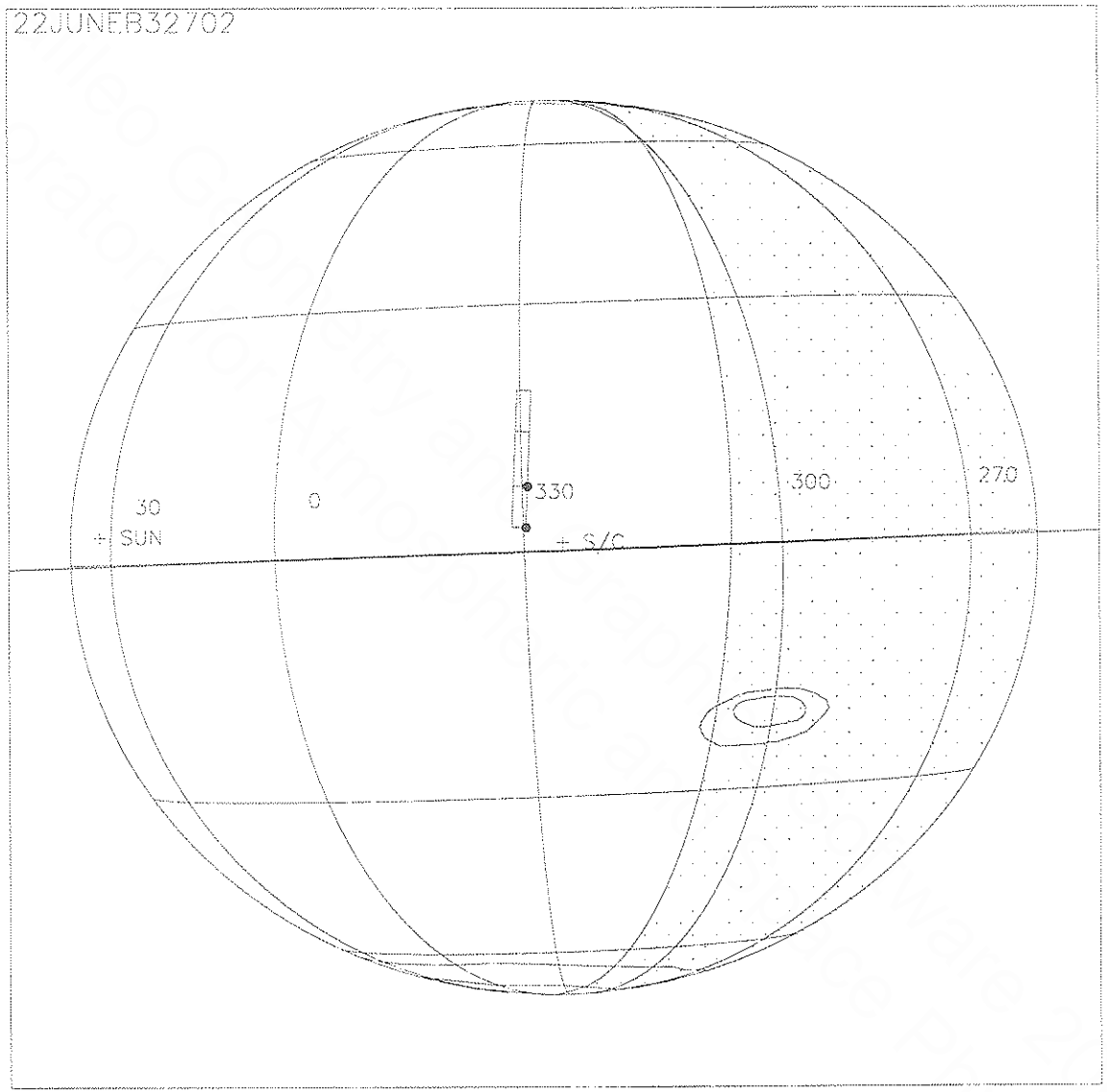

Start UTC_TIME : 1999-225 // 10:23:13.733
No End Time :
Start SCLK : 1/0512425106:1:6

Target Body : JUPITER
Target Ra/Dec : 92.65/ 25.25 Deg
S/C to Body Center : 1181827. Km (16.530905 Rj)
Z-axis Pointing (Ra / Dec) : 211.19 / -11.27 Deg

Activity ID: Orbit 22 **OAPEL** JUPOL295 **SeqNo** 02-

Title UVS AWG feature track **Instrument** UVS

Requestor UVS-AWG/W. KENT TOBISKA **Team** UVS **Working Group** AWG

Time System CDS **Load ID** 22A **Calendar Date** 08/13/99 **Week** 85

Start	JEE+CDS 00001406:00:0	99-225/10:40:25.066	JEE+000/23:41:37.333
End	JEE+CDS 00001410:00:0	99-225/10:44:27.733	JEE+000/23:45:40.000
Duration	00000004:00:0	000/00:04:02.667	000/00:04:02.667

Top Label 22JUPOL29502-

Bottom Label realtime

Plot Key	UVS	**Type**	SCI		
CDS Bytes	94	**Report Options**	BOTH	**Scan Platform**	Yes
CDS Source	OAP	**Spin State**	DUAL	**DMS**	No

Observation Objective

22JUPOL29502: AWG feature track with SSI to look at +65.0 latitude feature.

Rj = 16.5

UVS configuration: full F/F scans.

MBTG = 0.017712

Design Detail

```
PSID  CDS  RIM   COMMAND PARAMETERS
384AH 00   00:00 COMMNT UVS RIM 0
157AH 38   00:00  CMDRS PLAN_DUR = 3 RIMS; EST_UVS_CMDS = 2 (34UVS)
           01:00      1  UVF:07,SCAN,NORM,NORM,NORM,SAME,0,ON,OFF,OFF,ON,OFF,NOOVR,1,00,9C,00,00
           03:00      3  OFF:07,SCAN,NORM,NORM,NORM,SAME,0,ON,OFF,OFF,OFF,OFF,NOOVR,1,00,9C,00,00
349AO 28   01:69 UVFLSH DISCRD,UVS
165JD 00   02:00 TARGET Lat/Lon = 60.93/304.10; SSI target (RA/Dec=92.21/28.09)
349AP 28   02:69 UVFLSH PACKET,UVS
```

Tue Sep 14 21:28:14 1999

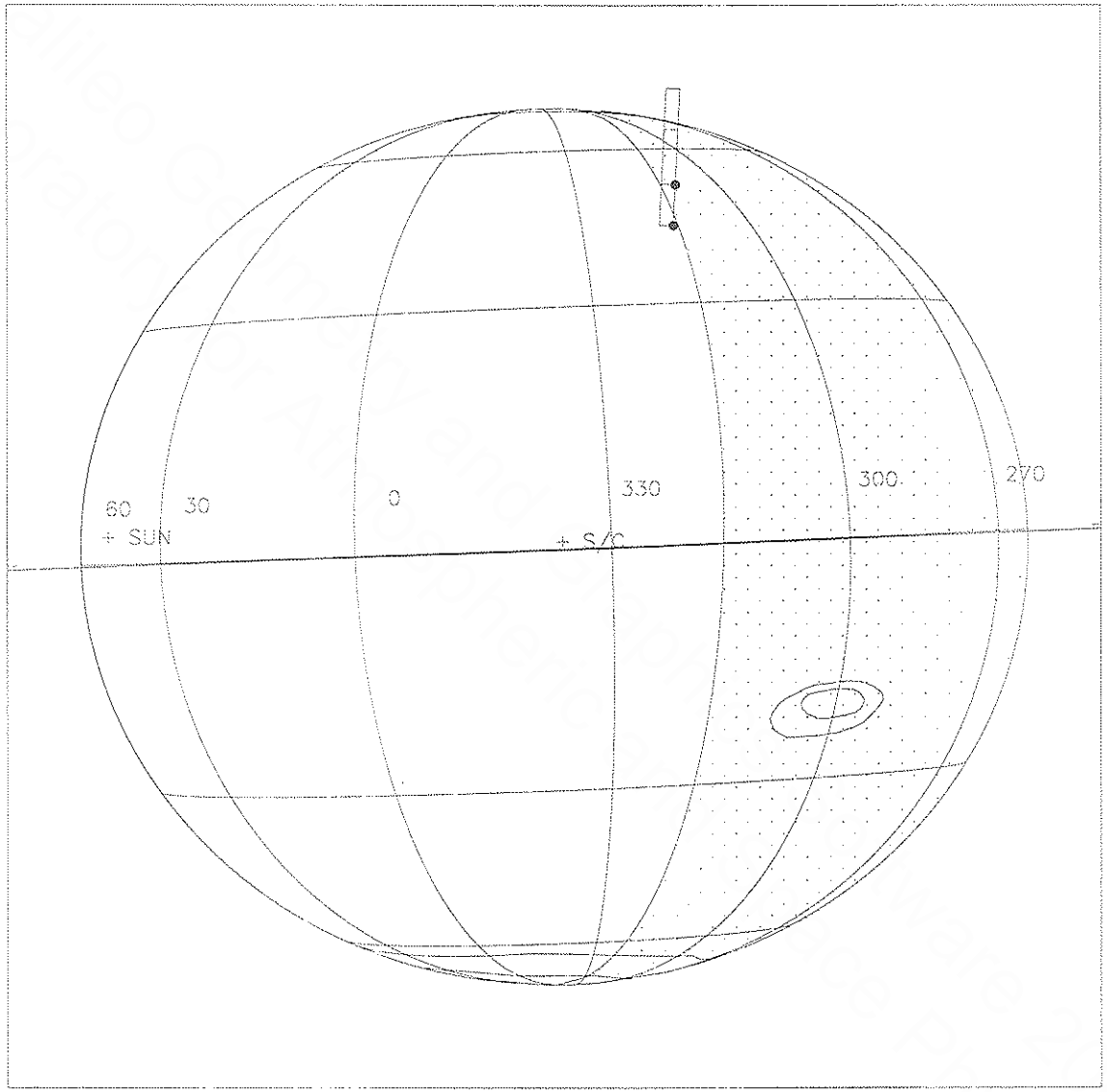

Start UTC_TIME : 1999-225 // 10:40:25.733
No End Time .
Start SCLK : 1/05124268:07:1:8

Target Body : JUPITER
Target Ra/Dec : 93.16/ 25.23 Deg
S/C to Body Center : 1191602. Km (16.667629 Rj)
Z-axis Pointing (Ra / Dec) : 211.19 / -11.27 Deg

Activity ID:	Orbit 22	OAPEL	JUNOR297	SeqNo	02-
Title	UVS AWG feature track			Instrument	UVS
Requestor	UVS-AWG/W. KENT TOBISKA	Team	UVS	Working Group	AWG

Time System	CDS	Load ID	22A	Calendar Date	08/13/99 Week 85

Start	JEE+CDS 00001414:00:0	99-225/10:48:30.399	JEE+000/23:49:42.666
End	JEE+CDS 00001418:00:0	99-225/10:52:33.066	JEE+000/23:53:45.333
Duration	00000004:00:0	000/00:04:02.667	000/00:04:02.667

Top Label	22JUNOR29702-				
Bottom Label	realtime				
Plot Key	UVS	Type	SCI		
CDS Bytes	94	Report Options	BOTH	Scan Platform	Yes
CDS Source	OAP	Spin State	DUAL	DMS	Yes

Observation Objective

22JUNOR29702: AWG feature track with SSI to look at +45.0 latitude feature.

Rj = 16.6

UVS configuration: full F/F scans.

MBTG = 0.017712

Design Detail

```
PSID   CDS   RIM   COMMAND PARAMETERS
384AI  00   00:00 COMMNT UVS RIM 0
157AI  38   00:00  CMDRS PLAN_DUR = 3 RIMS; EST_UVS_CMDS = 2 (34UVS)
            01:00      1  UVF:07,SCAN,NORM,NORM,NORM,SAME,0,ON,OFF,OFF,ON,OFF,NOOVR,1,00,9C,00,00
            03:00      3  OFF:07,SCAN,NORM,NORM,NORM,SAME,0,ON,OFF,OFF,OFF,OFF,NOOVR,1,00,9C,00,00
349AQ  28   01:69 UVFLSH DISCRD,UVS
165JF  00   02:00 TARGET Lat/Lon = 48.01/310.07; SSI target (RA/Dec=92.09/27.64)
349AR  28   02:69 UVFLSH PACKET,UVS
```

Tue Sep 14 21:29:10 1999

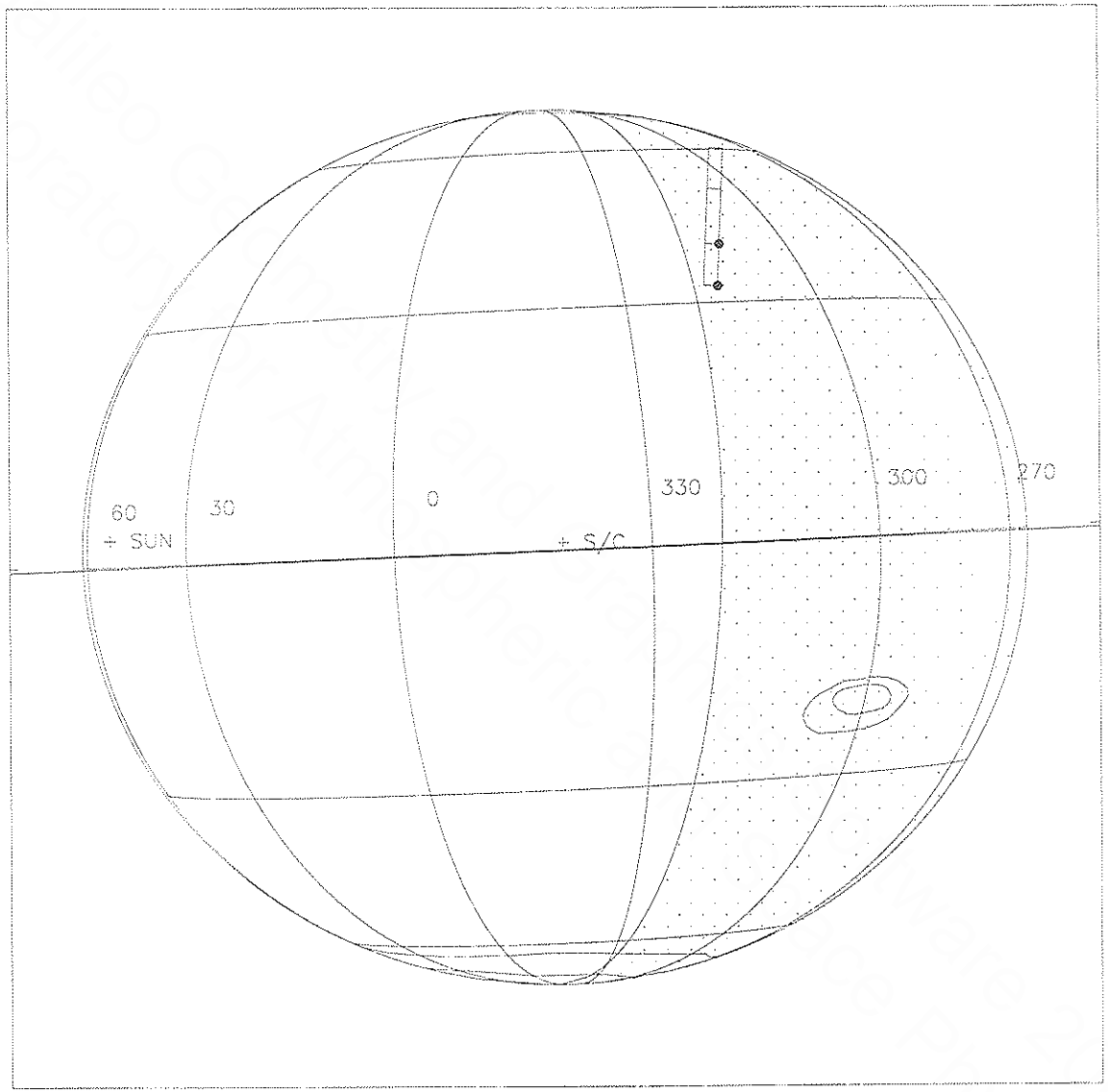

Start UTC_TIME : 1999-225 // 10:48:50.733
No End Time :
Start SCLK : 1/051242766:06:6:6

Target Body : JUPITER
Target Ra/Dec : 93.40/ 25.22 Deg
S/C to Body Center : 1196190. Km (16.731797 Rj)
Z-axis Pointing (Ra / Dec) : 211.19 / -11.27 Deg

Activity ID: Orbit 22 **OAPEL** JUBRITSD **SeqNo** 01-

Title Jupiter brightside hydrocarbons **Instrument** UVS

Requestor UVS-AWG/W. KENT TOBISKA **Team** UVS **Working Group** AWG

Time System CDS **Load ID** 22A **Calendar Date** 08/13/99 **Week** 85

Start	JEE+CDS 00001440:00:0	99-225/11:14:47.733	JEE+001/00:16:00.000
End	JEE+CDS 00001460:00:0	99-225/11:35:01.066	JEE+001/00:36:13.333
Duration	00000020:00:0	000/00:20:13.333	000/00:20:13.333

Top Label 22JUBRITSD01-

Bottom Label realtime

Plot Key UVS **Type** SCI

CDS Bytes 121 **Report Options** BOTH **Scan Platform** Yes

CDS Source OAP **Spin State** DUAL **DMS** No

Observation Objective

Observe brightside hydrocarbon emissions to develop a statistically significant acetylene and ammonia spectrum at four latitudes. This study will help understand minor species chemistry related to dynamics in Jupiter's stratosphere/upper troposphere. Low photon count rates require substantial integration time. This is a realtime observation for several hours during the feature track window using either a G/G 176 step miniscan covering 1496-1755 Å or a G/G full scan at a distance from Jupiter = 16.9 Rj.

MBTG = 0.017712;
176-step mini-scan G/G
GEM Objective Phase 2 - Jupiter atm. dynamics

Design Detail

```
PSID  CDS  RIM   COMMAND PARAMETERS
384AU 00   00:00 COMMNT UVS RIM 0
157AU 38   00:00  CMDRS PLAN_DUR = 20 RIMS; EST_UVS_CMDS = 2 (34UVS)
           01:00      1  UVG:E3,FIXED,NORM,NORM,NORM,SAME,0,OFF,OFF,ON,ON,OFF,NOOVR,1,1A,8E,00,00
           20:00     20  OFF:07,SCAN,NORM,NORM,NORM,SAME,0,ON,OFF,OFF,OFF,OFF,NOOVR,1,00,9C,00,00
349AS 28   00:69 UVFLSH DISCRD,UVS
165AA 27   01:00 TARGET subsc pt, cone_off=-20.0 (RA/Dec = 95.46/25.20)
                        Lat/lon = 1/15-18
                        light   = 52-61
                        view    = 20-11
349AT 28   19:69 UVFLSH PACKET,UVS
```

Tue Sep 14 21:30:07 1999

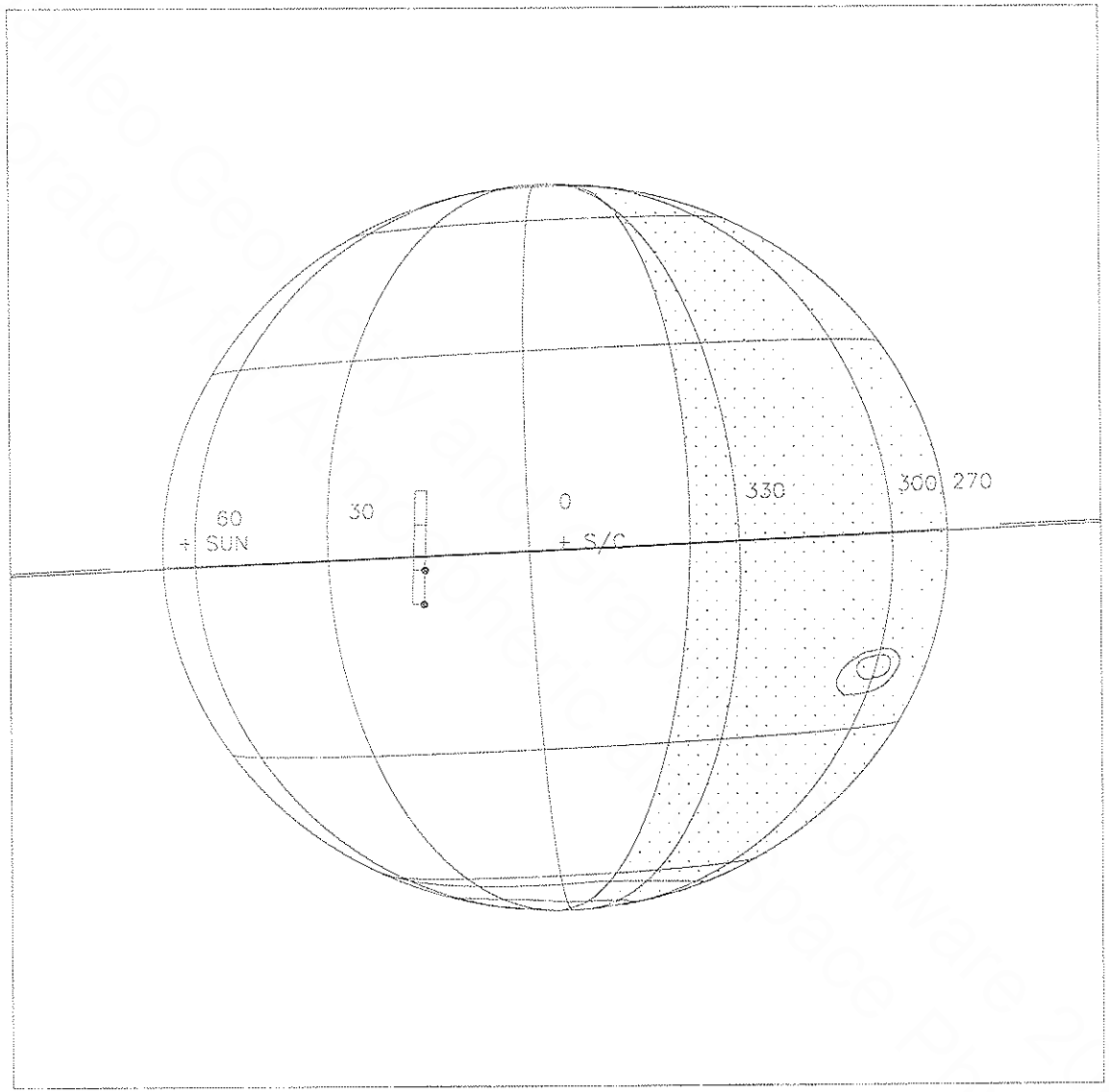

Start UTC_TIME : 1999-225 // 11:14:47.733
No End Time :
Start SCLK : 1/05124302:06:1:6

Target Body : JUPITER
Target Ra/Dec : 94.16/ 25.19 Deg
S/C to Body Center : 1211078. Km (16.940056 Rj)
Z-axis Pointing (Ra / Dec) : 211.19 / -11.27 Deg

Activity ID: Orbit 22 **OAPEL** JUBRITSD **SeqNo** 02-

Title Jupiter brightside hydrocarbons **Instrument** UVS

Requestor UVS-AWG/W. KENT TOBISKA **Team** UVS **Working Group** AWG

Time System CDS **Load ID** 22A **Calendar Date** 08/13/99 **Week** 85

Start	JEE+CDS 00001530:00:0	99-225/12:45:47.733	JEE+001/01:47:00.000
End	JEE+CDS 00001569:00:0	99-225/13:25:13.733	JEE+001/02:26:26.000
Duration	00000039:00:0	000/00:39:26.000	000/00:39:26.000

Top Label 22JUBRITSD02-

Bottom Label realtime

Plot Key	UVS	**Type**	SCI		
CDS Bytes	121	**Report Options**	BOTH	**Scan Platform**	Yes
CDS Source	OAP	**Spin State**	DUAL	**DMS**	No

Observation Objective

Observe brightside hydrocarbon emissions to develop a statistically significant acetylene and ammonia spectrum at four latitudes. This study will help understand minor species chemistry related to dynamics in Jupiter's stratosphere/upper troposphere. Low photon count rates require substantial integration time. This is a realtime observation for several hours during the feature track window using either a G/G 176 step miniscan covering 1496-1755 Å or a G/G full scan at a distance from Jupiter = 17.7 Rj.

MBTG = 0.017712;
176-step mini-scan G/G
GEM Objective Phase 2 - Jupiter atm. dynamics

Design Detail

```
PSID  CDS  RIM   COMMAND PARAMETERS
384AK 00   00:00 COMMNT UVS RIM 0
157AK 38   00:00  CMDRS PLAN_DUR = 39 RIMS; EST_UVS_CMDS = 2 (34UVS)
           01:00      1  UVG:E3,FIXED,NORM,NORM,NORM,SAME,0,OFF,OFF,ON,ON,OFF,NOOVR,1,1A,8E,00,00
           39:00     39  OFF:07,SCAN,NORM,NORM,NORM,SAME,0,ON,OFF,OFF,OFF,OFF,NOOVR,1,00,9C,00,00
349AU 28   00:69 UVFLSH DISCRD,UVS
165AK 27   01:00 TARGET subsc pt, cone_off=-20.0 (RA/Dec = 97.95/25.06)
                        Lat/lon = 1/69-76
                        light   = 53-70
                        view    = 20-4
349AV 28   38:69 UVFLSH PACKET,UVS
```

Tue Sep 14 21:30:59 1999

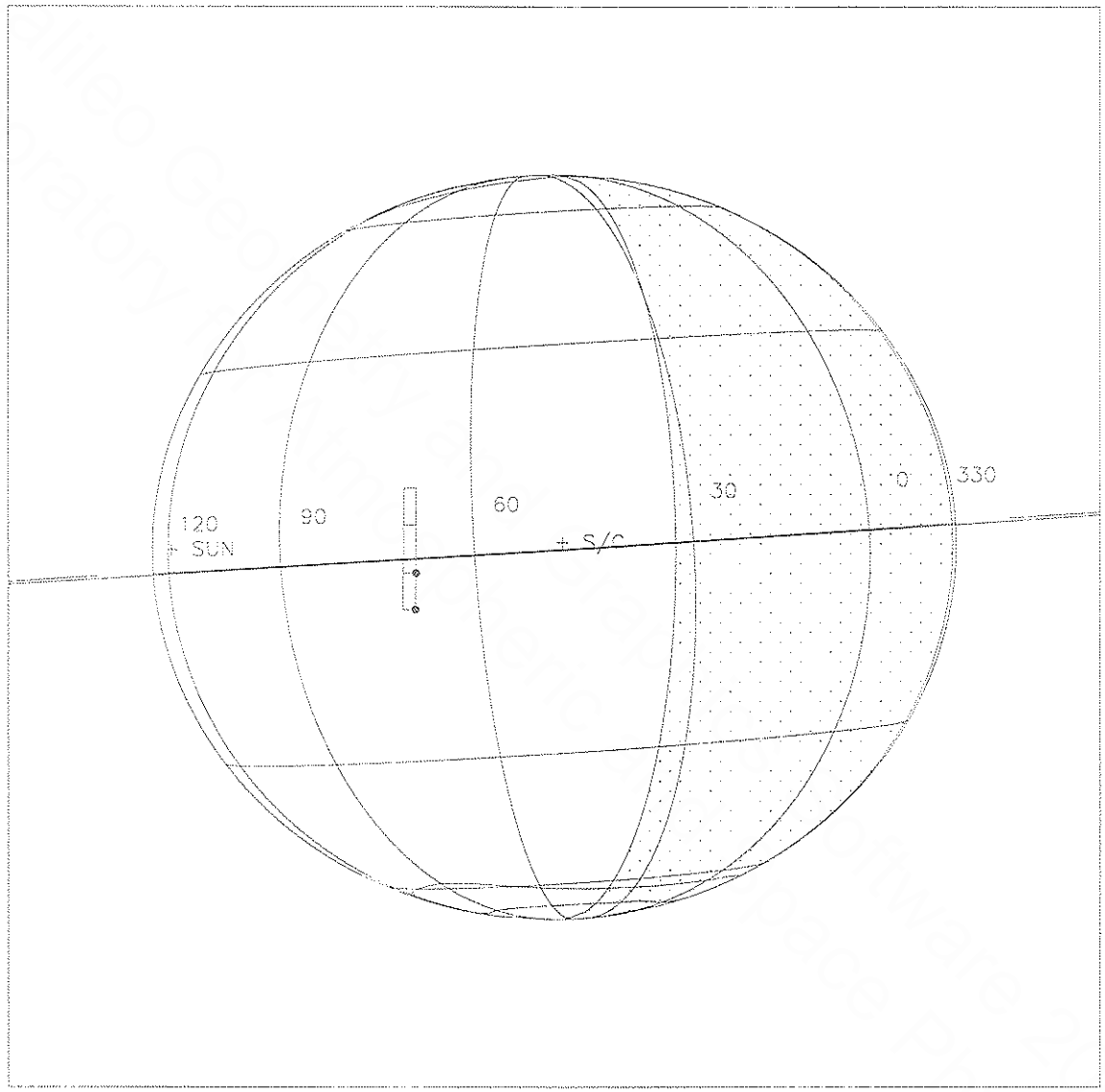

Start UTC_TIME : 1999-225 // 12:45:47.733
No End Time :
Start SCLK : 1/05124392:06:1:7

Target Body : JUPITER
Target Ra/Dec : 95.66/ 25.07 Deg
S/C to Body Center : 1262288. Km (17.656347 Rj)
Z-axis Pointing (Ra / Dec) : 211.19 / -11.27 Deg

Activity ID: Orbit 22 **OAPEL** JUBRITSD **SeqNo** 03-

Title Jupiter brightside hydrocarbons **Instrument** UVS

Requestor UVS-AWG/W. KENT TOBISKA **Team** UVS **Working Group** AWG

Time System CDS **Load ID** 22A **Calendar Date** 08/13/99 **Week** 85

Start	JEE+CDS 00001570:00:0	99-225/13:26:14.399	JEE+001/02:27:26.666
End	JEE+CDS 00001609:00:0	99-225/14:05:40.399	JEE+001/03:06:52.666
Duration	00000039:00:0	000/00:39:26.000	000/00:39:26.000

Top Label 22JUBRITSD03-

Bottom Label realtime

Plot Key	UVS	**Type**	SCI		
CDS Bytes	121	**Report Options**	BOTH	**Scan Platform**	Yes
CDS Source	OAP	**Spin State**	DUAL	**DMS**	No

Observation Objective

Observe brightside hydrocarbon emissions to develop a statistically significant acetylene and ammonia spectrum at four latitudes. This study will help understand minor species chemistry related to dynamics in Jupiter's stratosphere/upper troposphere. Low photon count rates require substantial integration time. This is a realtime observation for several hours during the feature track window using either a G/G 176 step miniscan covering 1496-1755 Å or a G/G full scan at a distance from Jupiter = 18.1 Rj.

MBTG = 0.017712;
176-step mini-scan G/G
GEM Objective Phase 2 - Jupiter atm. dynamics

Design Detail

```
PSID   CDS   RIM   COMMAND PARAMETERS
384AL  00    00:00 COMMNT UVS RIM 0
157AL  38    00:00  CMDRS PLAN_DUR = 39 RIMS; EST_UVS_CMDS = 2 (34UVS)
             01:00      1  UVG:E3,FIXED,NORM,NORM,NORM,SAME,0,OFF,OFF,ON,ON,OFF,NOOVR,1,1A,8E,00,00
             39:00     39  OFF:07,SCAN,NORM,NORM,NORM,SAME,0,ON,OFF,OFF,OFF,OFF,NOOVR,1,00,9C,00,00
349AW  28    00:69 UVFLSH DISCRD,UVS
165AL  27    01:00 TARGET subsc pt, cone_off=-20.0 (RA/Dec = 98.99/24.99)
                          Lat/lon = 1/93-100
                          light   = 54-70
                          view    = 21-5
349AX  28    38:69 UVFLSH PACKET,UVS
```

Tue Sep 14 21:32:01 1999

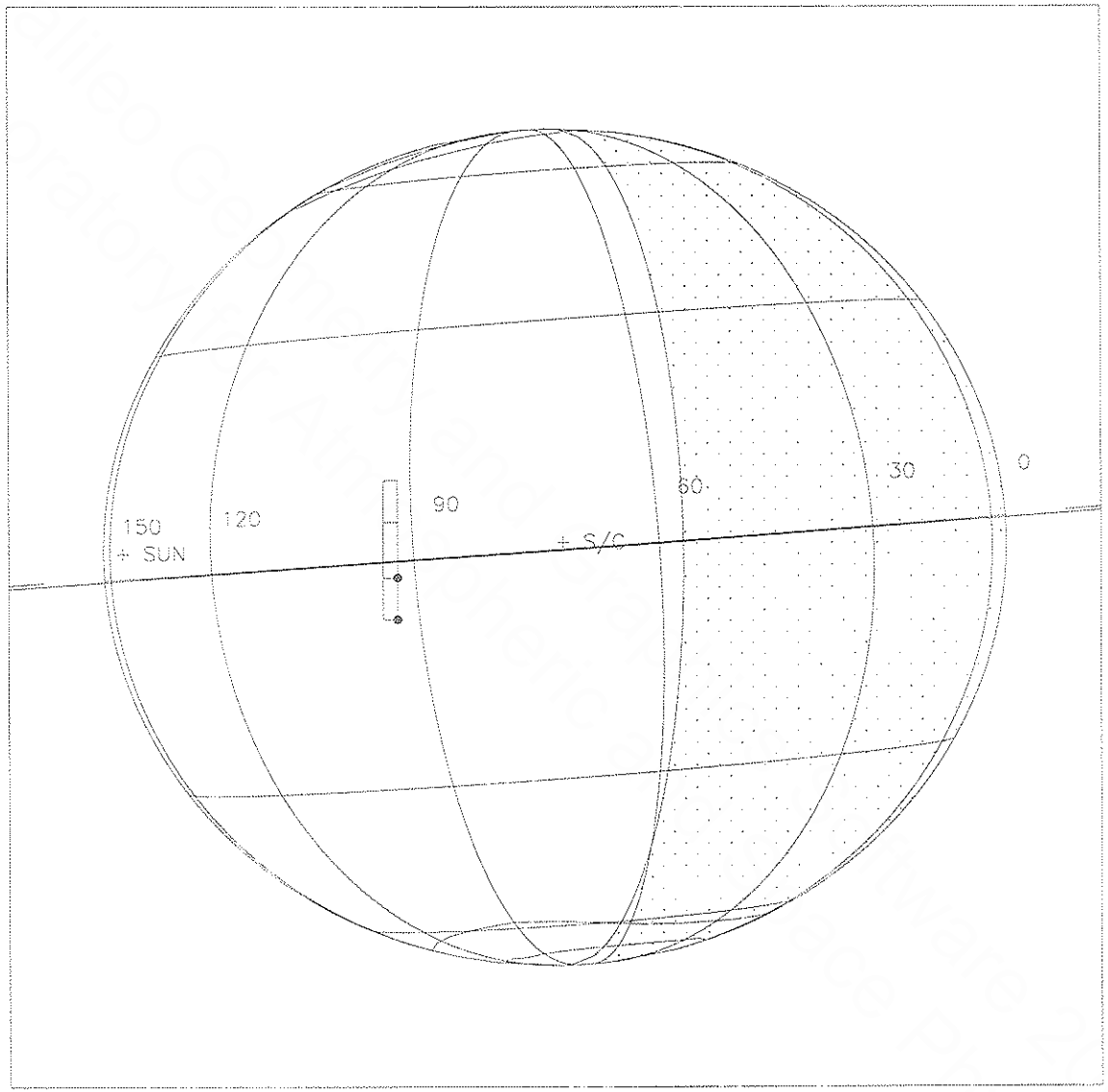

Start UTC_TIME : 1999-225 // 13:26:14.733
No End Time :
Start SCLK : 1/05124432:06:6:7

Target Body : JUPITER
Target Ra/Dec : 97.71/ 25.01 Deg
S/C to Body Center : 1284874. Km (17.972282 Rj)
Z-axis Pointing (Ra / Dec) : 211.19 / -11.27 Deg

Activity ID: Orbit 22 **OAPEL** JUBRITSD **SeqNo** 04-

Title Jupiter brightside hydrocarbons **Instrument** UVS

Requestor UVS-AWG/W. KENT TOBISKA **Team** UVS **Working Group** AWG

Time System CDS **Load ID** 22A **Calendar Date** 08/13/99 **Week** 85

Start	JEE+CDS 00001619:00:0	99-225/14:15:47.066	JEE+001/03:16:59.333
End	JEE+CDS 00001664:00:0	99-225/15:01:17.066	JEE+001/04:02:29.333
Duration	00000045:00:0	000/00:45:30.000	000/00:45:30.000

Top Label 22JUBRITSD04-

Bottom Label realtime

Plot Key UVS **Type** SCI

CDS Bytes 121 **Report Options** BOTH **Scan Platform** Yes

CDS Source OAP **Spin State** DUAL **DMS** No

Observation Objective

Observe brightside hydrocarbon emissions to develop a statistically significant acetylene and ammonia spectrum at four latitudes. This study will help understand minor species chemistry related to dynamics in Jupiter's stratosphere/upper troposphere. Low photon count rates require substantial integration time. This is a realtime observation for several hours during the feature track window using either a G/G 176 step miniscan covering 1496-1755 Å or a G/G full scan at a distance from Jupiter = 18.4 Rj.

MBTG = 0.017712;
176-step mini-scan G/G
GEM Objective Phase 2 - Jupiter atm. dynamics

Design Detail

```
PSID   CDS   RIM   COMMAND PARAMETERS
384AM  00   00:00  COMMNT UVS RIM 0
157AM  38   00:00   CMDRS PLAN_DUR = 45 RIMS; EST_UVS_CMDS = 2 (34UVS)
            01:00       1  UVG:E3,FIXED,NORM,NORM,NORM,SAME,0,OFF,OFF,ON,ON,OFF,NOOVR,1,1A,8E,00,00
            45:00      45  OFF:07,SCAN,NORM,NORM,NORM,SAME,0,ON,OFF,OFF,OFF,OFF,NOOVR,1,00,9C,00,00
349AY  28   00:69  UVFLSH DISCRD,UVS
165AM  27   01:00  TARGET subsc pt, cone_off=-20.0 (RA/Dec = 100.22/24.89)
                         Lat/lon = 1/122-131
                         light   = 55-73
                         view    = 21-3
349AZ  28   44:69  UVFLSH PACKET,UVS
```

Tue Sep 14 21:33:12 1999

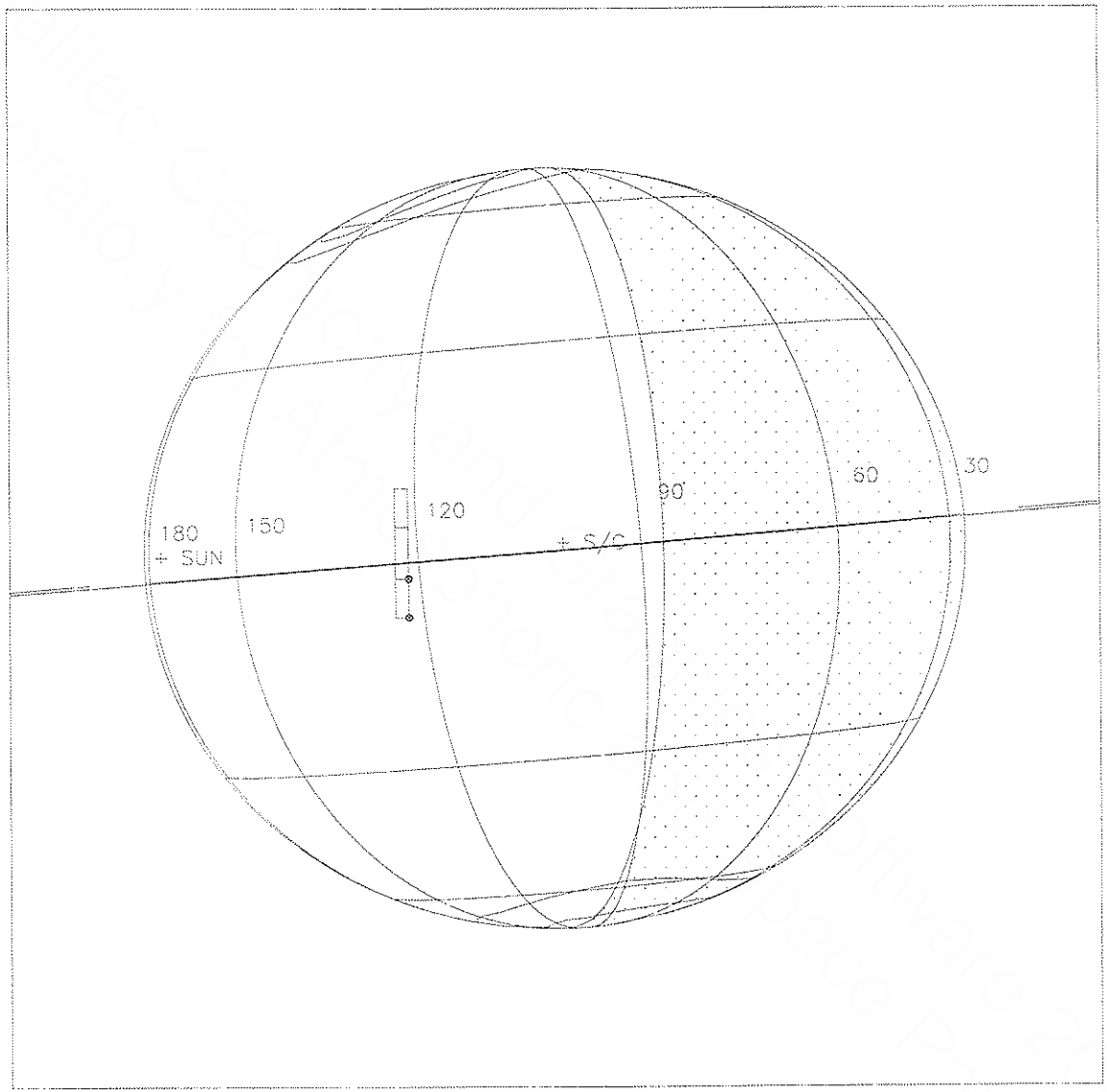

Start UTC_TIME : 1999-225 // 14:15:47.733
No End Time :
Start SCLK : 1/05124481:07:1:7

Target Body : JUPITER
Target Ra/Dec : 98.93/ 24.92 Deg
S/C to Body Center : 1312390. Km (18.357160 RJ)
Z-axis Pointing (Ra / Dec) : 211.19 / -11.27 Deg

Activity ID: **Orbit** 22 **OAPEL** JUBRITSD **SeqNo** 05-

Title Jupiter brightside hydrocarbons **Instrument** UVS

Requestor UVS-AWG/W. KENT TOBISKA **Team** UVS **Working Group** AWG

Time System CDS **Load ID** 22A **Calendar Date** 08/13/99 Week 85

Start	JEE+CDS 00001664:00:0	99-225/15:01:17.066	JEE+001/04:02:29.333
End	JEE+CDS 00001709:00:0	99-225/15:46:47.066	JEE+001/04:47:59.333
Duration	00000045:00:0	000/00:45:30.000	000/00:45:30.000

Top Label 22JUBRITSD05-

Bottom Label realtime

Plot Key UVS **Type** SCI

CDS Bytes 93 **Report Options** BOTH **Scan Platform** Yes

CDS Source OAP **Spin State** DUAL **DMS** No

Observation Objective

Observe brightside hydrocarbon emissions to develop a statistically significant acetylene and ammonia spectrum at four latitudes. This study will help understand minor species chemistry related to dynamics in Jupiter's stratosphere/upper troposphere. Low photon count rates require substantial integration time. This is a realtime observation for several hours during the feature track window using either a G/G 176 step miniscan covering 1496-1755 Å or a G/G full scan at a distance from Jupiter = 18.7 Rj.

MBTG = 0.017712;
176-step mini-scan G/G
GEM Objective Phase 2 - Jupiter atm. dynamics

Design Detail

```
PSID  CDS  RIM   COMMAND PARAMETERS
384AN 00   00:00 COMMNT UVS RIM 0
157AN 38   00:00  CMDRS PLAN_DUR = 45 RIMS; EST_UVS_CMDS = 2 (34UVS)
           01:00      1  UVG:E3,FIXED,NORM,NORM,NORM,SAME,0,OFF,OFF,ON,ON,OFF,NOOVR,1,1A,8E,00,00
           45:00     45  OFF:07,SCAN,NORM,NORM,NORM,SAME,0,ON,OFF,OFF,OFF,OFF,NOOVR,1,00,9C,00,00
349CY 00   00:69 UVFLSH DISCRD,UVS (deleted and use previous flush)
165AN 27   01:00 TARGET subsc pt, cone_off=-20.0 (RA/Dec = 101.30/24.80)
                        Lat/lon = 1/149-158
                        light   = 55-73
                        view    = 22-4
349CZ 28   44:69 UVFLSH PACKET,UVS
```

This is the command in the "AS RUN" sequence.
June 29, 07 KES

(NOTE: we were leaving the grating at "F" to see if that would help position commanding.) KES

Tue Sep 14 21:35:38 1999

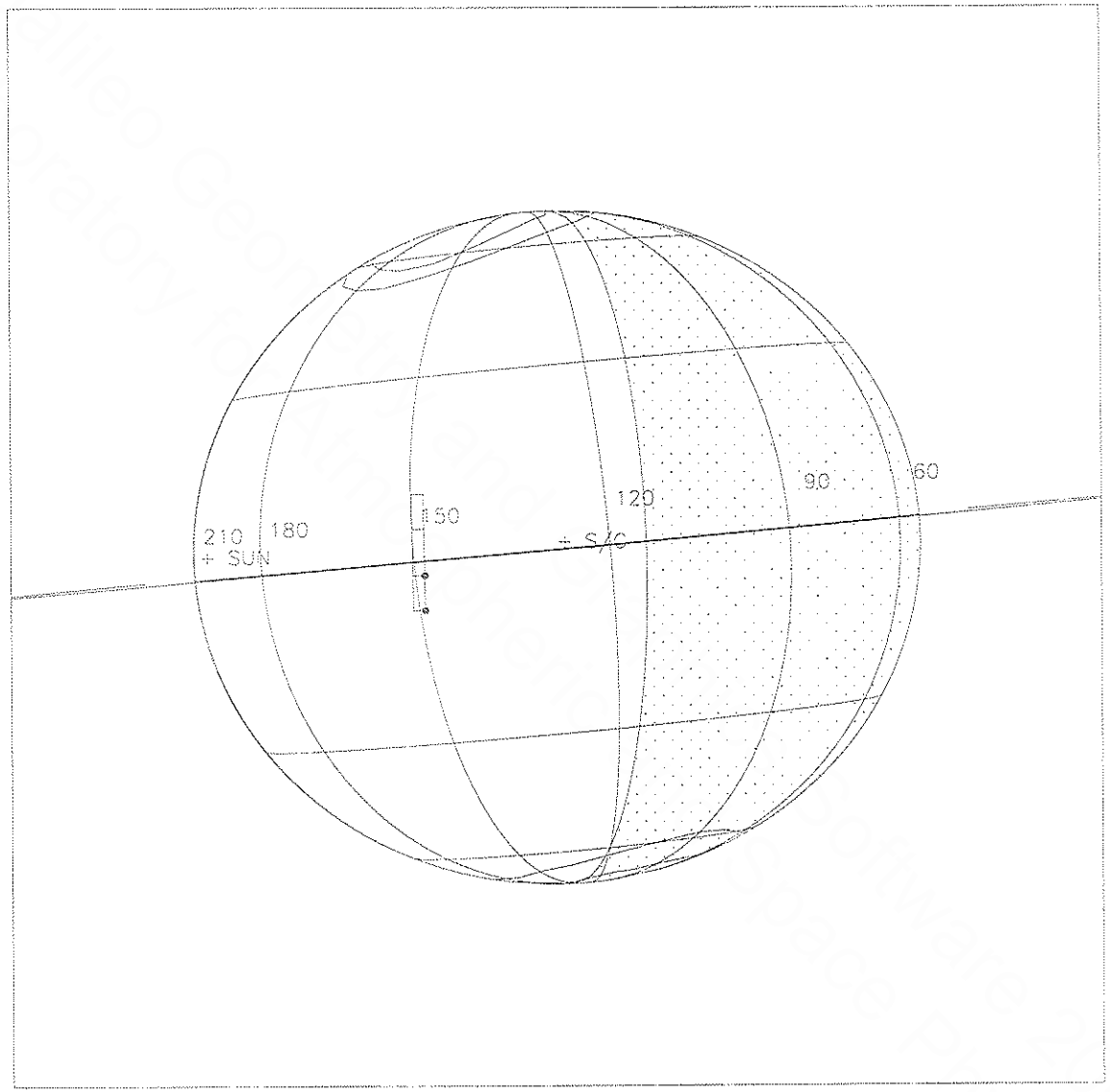

Start UTC_TIME : 1999-225 // 15:01:17.733
No End Time :
Start SCLK : 1/05124526:07:1:7

Target Body : JUPITER
Target Ra/Dec : 100.02/ 24.84 Deg
S/C to Body Center : 1337506. Km (18.708476 Rj)
Z-axis Pointing (Ra / Dec) : 211.19 / -11.27 Deg

Activity ID: Orbit 22 **OAPEL** JUBRITSD **SeqNo** 06-

Title Jupiter brightside hydrocarbons **Instrument** UVS

Requestor UVS-AWG/W. KENT TOBISKA **Team** UVS **Working Group** AWG

Time System CDS **Load ID** 22A **Calendar Date** 08/13/99 **Week** 85

Start	JEE+CDS 00001715:00:0	99-225/15:52:51.066	JEE+001/04:54:03.333
End	JEE+CDS 00001776:00:0	99-225/16:54:31.733	JEE+001/05:55:44.000
Duration	00000061:00:0	000/01:01:40.667	000/01:01:40.667

Top Label 22JUBRITSD06-

Bottom Label realtime

Plot Key	UVS	**Type**	SCI		
CDS Bytes	93	**Report Options**	BOTH	**Scan Platform**	Yes
CDS Source	OAP	**Spin State**	DUAL	**DMS**	No

Observation Objective

Observe brightside hydrocarbon emissions to develop a statistically significant acetylene and ammonia spectrum at four latitudes. This study will help understand minor species chemistry related to dynamics in Jupiter's stratosphere/upper troposphere. Low photon count rates require substantial integration time. This is a realtime observation for several hours during the feature track window using either a G/G 176 step miniscan covering 1496-1755 Å or a G/G full scan at a distance from Jupiter = 18.9 Rj.

MBTG = 0.017712;
176-step mini-scan G/G
GEM Objective Phase 2 - Jupiter atm. dynamics

Design Detail

```
PSID  CDS  RIM  COMMAND PARAMETERS
384AO 00   00:00 COMMNT UVS RIM 0
157AO 38   00:00  CMDRS PLAN_DUR = 61 RIMS; EST_UVS_CMDS = 2 (34UVS)
           01:00      1  UVG:E3,FIXED,NORM,NORM,NORM,SAME,0,OFF,OFF,ON,ON,OFF,NOOVR,1,1A,8E,00,00
           61:00     61  OFF:07,SCAN,NORM,NORM,NORM,SAME,0,ON,OFF,OFF,OFF,OFF,NOOVR,1,00,9C,00,00
349CW 00   00:69 UVFLSH DISCRD,UVS (delete and use previous flush)
165AO 27   01:00 TARGET subsc pt, cone_off=-20.0 (RA/Dec = 102.48/24.69)
                        Lat/lon = 1/180-192
                        light   = 56-79
                        view    = 22-1
349CX 28   60:69 UVFLSH PACKET,UVS
```

Tue Sep 14 21:37:24 1999

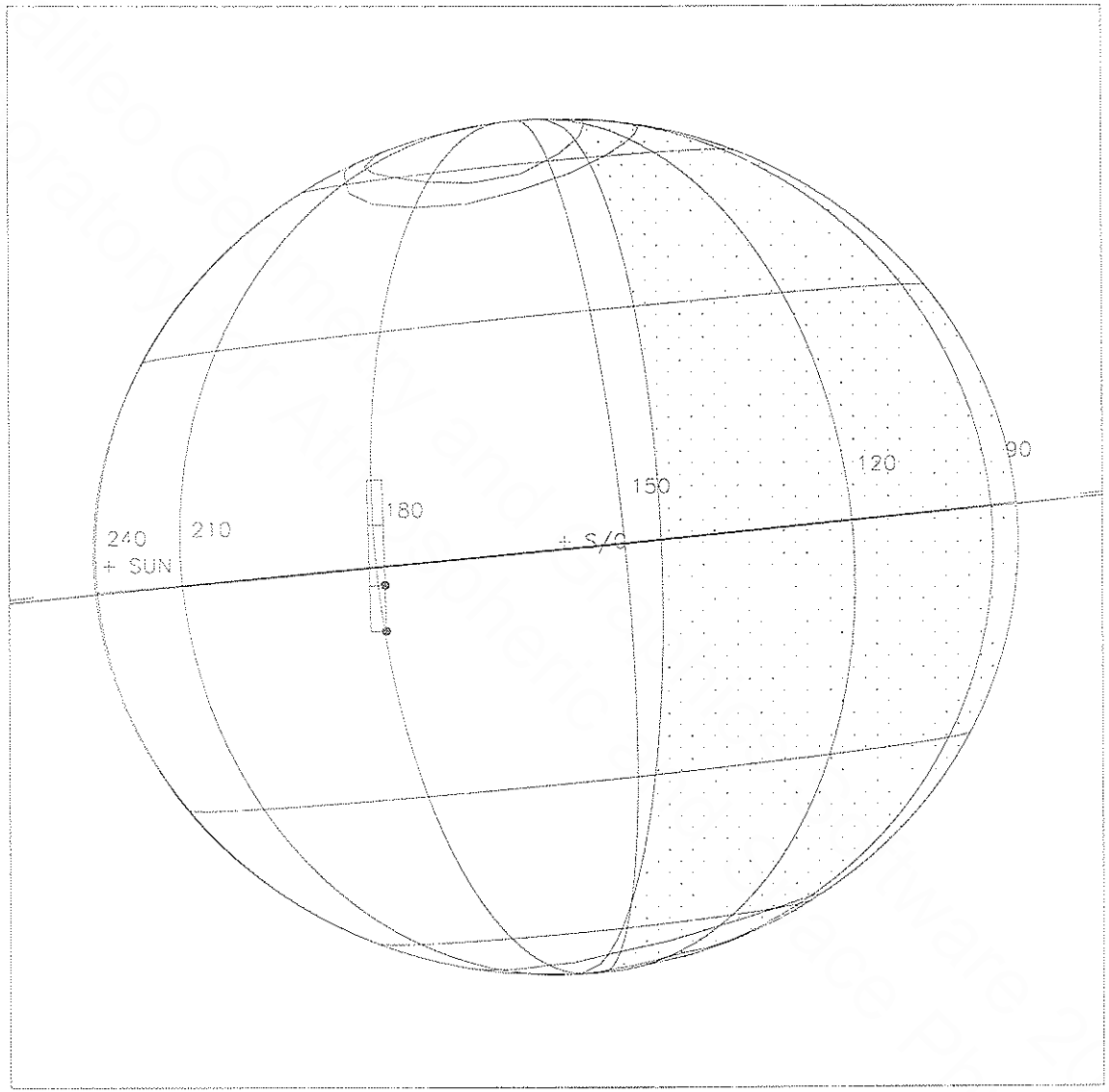

Start UTC_TIME : 1999-225 // 15:52:51.733
No End Time :
Start SCLK : 1/05124577:07:1:7

Target Body : JUPITER
Target Ra/Dec : 101.20/ 24.74 Deg
S/C to Body Center : 1365795. Km (19.104164 Rj)
Z-axis Pointing (Ra / Dec) : 211.19 / -11.27 Deg

Activity ID: Orbit 22 **OAPEL** JUBRITSD **SeqNo** 07-

Title Jupiter brightside hydrocarbons **Instrument** UVS

Requestor UVS-AWG/W. KENT TOBISKA **Team** UVS **Working Group** AWG

Time System CDS **Load ID** 22A **Calendar Date** 08/13/99 **Week** 85

Start	JEE+CDS 00001776:00:0	99-225/16:54:31.733	JEE+001/05:55:44.000
End	JEE+CDS 00001802:00:0	99-225/17:20:49.066	JEE+001/06:22:01.333
Duration	00000026:00:0	000/00:26:17.333	000/00:26:17.333

Top Label 22JUBRITSD07-

Bottom Label realtime

Plot Key	UVS	**Type**	SCI		
CDS Bytes	93	**Report Options**	BOTH	**Scan Platform**	Yes
CDS Source	OAP	**Spin State**	DUAL	**DMS**	No

Observation Objective

Observe brightside hydrocarbon emissions to develop a statistically significant acetylene and ammonia spectrum at four latitudes. This study will help understand minor species chemistry related to dynamics in Jupiter's stratosphere/upper troposphere. Low photon count rates require substantial integration time. This is a realtime observation for several hours during the feature track window using either a G/G 176 step miniscan covering 1496-1755 Å or a G/G full scan at a distance from Jupiter = 19.4 Rj.

MBTG = 0.017712;
176-step mini-scan G/G
GEM Objective Phase 2 - Jupiter atm. dynamics

Design Detail

```
PSID   CDS   RIM   COMMAND PARAMETERS
384AP 00   00:00 COMMNT UVS RIM 0
157AP 38   00:00  CMDRS PLAN_DUR = 26 RIMS; EST_UVS_CMDS = 2 (34UVS)
           01:00      1  UVG:E3,FIXED,NORM,NORM,NORM,SAME,0,OFF,OFF,ON,ON,OFF,NOOVR,1,1A,8E,00,00
           26:00     26  OFF:07,SCAN,NORM,NORM,NORM,SAME,0,ON,OFF,OFF,OFF,OFF,NOOVR,1,00,9C,00,00
349CU 00   00:69 UVFLSH DISCRD,UVS (delete and use previous flush)
165AP 27   01:00 TARGET subsc pt, cone_off=-20.0 (RA/Dec = 103.82/24.55)
                        Lat/lon = 1/216-222
                        light   = 56-66
                        view    = 23-13
349CV 28   25:69 UVFLSH PACKET,UVS
```

Tue Sep 14 21:38:33 1999

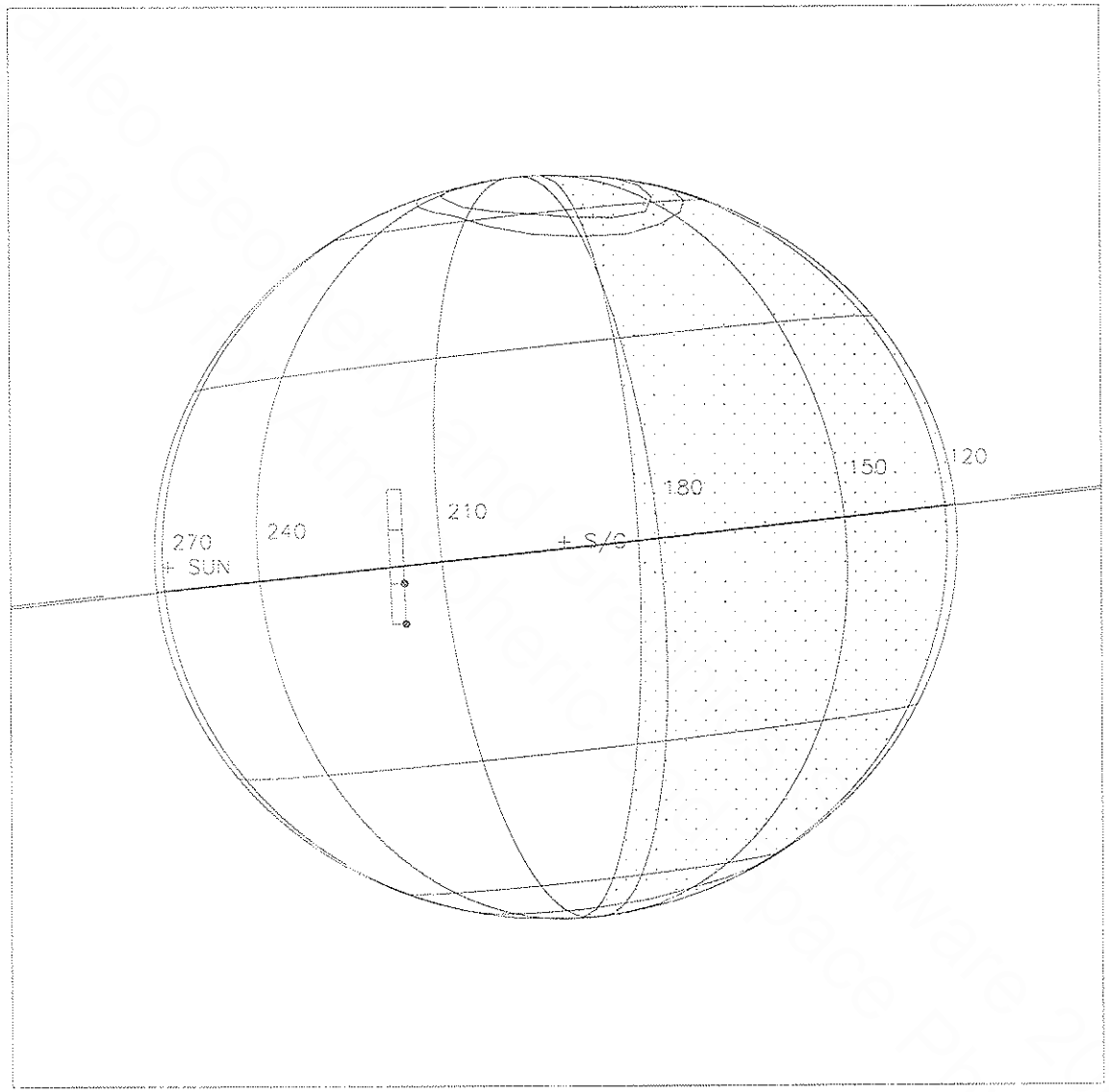

Start UTC_TIME : 1999-225 // 16:54:31.733
No End Time :
Start SCLK : 1/05124638:06:2:0

Target Body : JUPITER
Target Ra/Dec : 102.54/ 24.62 Deg
S/C to Body Center : 1399375. Km (19.573869 Rj)
Z-axis Pointing (Ra / Dec) : 211.19 / -11.27 Deg

Activity ID: Orbit 22 **OAPEL** JUBRITSD **SeqNo** 08-

Title Jupiter brightside hydrocarbons **Instrument** UVS

Requestor UVS-AWG/W. KENT TOBISKA **Team** UVS **Working Group** AWG

Time System CDS **Load ID** 22A **Calendar Date** 08/13/99 **Week** 85

Start	JEE+CDS 00001818:00:0	99-225/17:36:59.733	JEE+001/06:38:12.000
End	JEE+CDS 00001855:00:0	99-225/18:14:24.399	JEE+001/07:15:36.666
Duration	00000037:00:0	000/00:37:24.666	000/00:37:24.666

Top Label 22JUBRITSD08-

Bottom Label realtime

Plot Key UVS **Type** SCI

CDS Bytes 121 **Report Options** BOTH **Scan Platform** Yes

CDS Source OAP **Spin State** DUAL **DMS** No

Observation Objective

Observe brightside hydrocarbon emissions to develop a statistically significant acetylene and ammonia spectrum at four latitudes. This study will help understand minor species chemistry related to dynamics in Jupiter's stratosphere/upper troposphere. Low photon count rates require substantial integration time. This is a realtime observation for several hours during the feature track window using either a G/G 176 step miniscan covering 1496-1755 Å or a G/G full scan at a distance from Jupiter = 19.8 Rj.

MBTG = 0.017712;
176-step mini-scan G/G
GEM Objective Phase 2 - Jupiter atm. dynamics

Design Detail

```
PSID   CDS   RIM   COMMAND PARAMETERS
384AQ 00   00:00 COMMNT UVS RIM 0
157AQ 38   00:00  CMDRS PLAN_DUR = 37 RIMS; EST_UVS_CMDS = 2 (34UVS)
           01:00      1  UVG:E3,FIXED,NORM,NORM,NORM,SAME,0,OFF,OFF,ON,ON,OFF,NOOVR,1,1A,8E,00,00
           37:00     37  OFF:07,SCAN,NORM,NORM,NORM,SAME,0,ON,OFF,OFF,OFF,OFF,NOOVR,1,00,9C,00,00
349CS 28   00:69 UVFLSH DISCRD,UVS
165AQ 27   01:00 TARGET subsc pt, cone_off=-20.0 (RA/Dec = 104.70/24.46)
                        Lat/lon = 1/241-249
                        light   = 57-71
                        view    = 23-9
349CT 28   36:69 UVFLSH PACKET,UVS
```

Tue Sep 14 21:40:07 1999

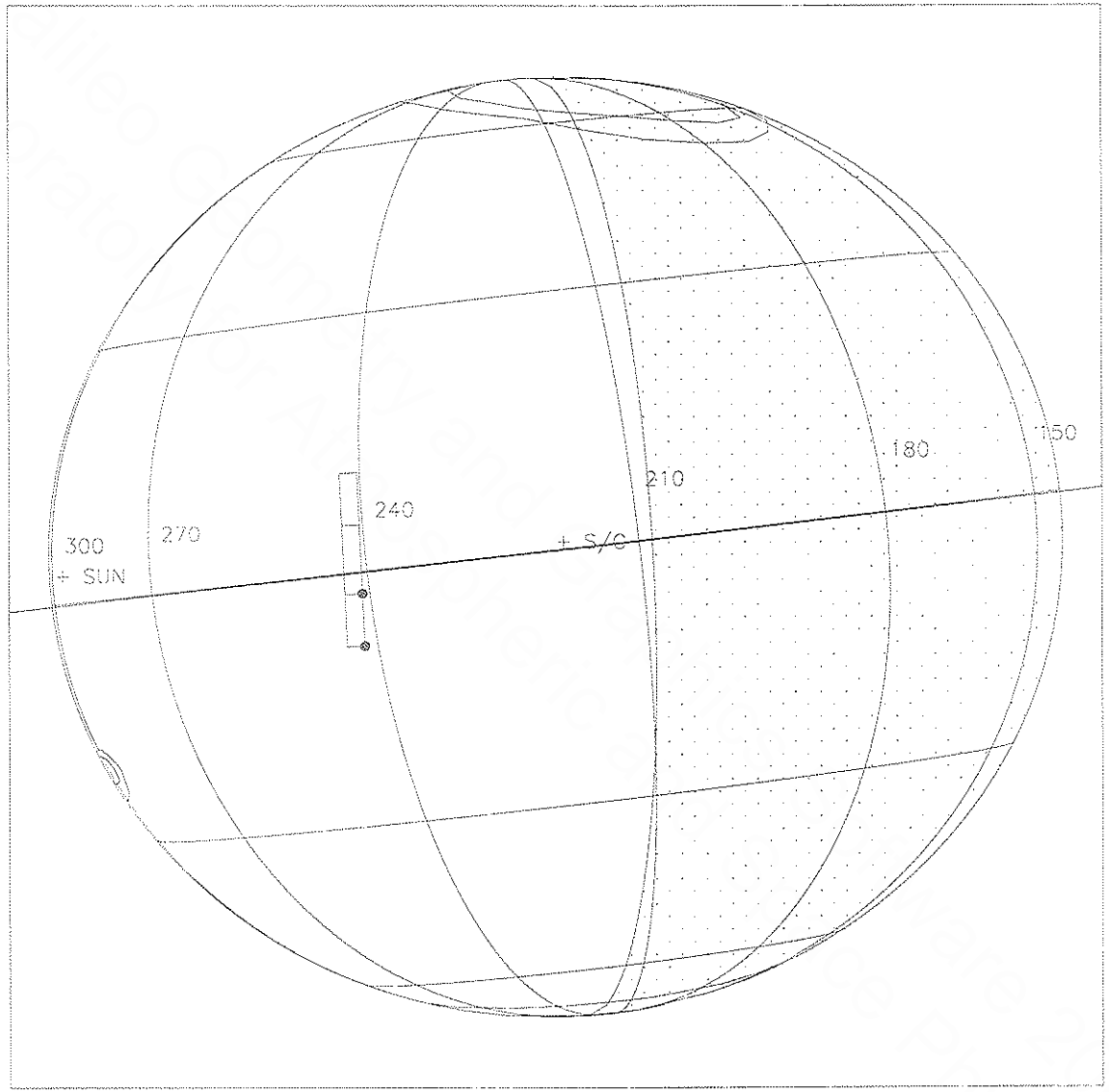

Start UTC_TIME : 1999-225 // 17:36:59.733
No End Time :
Start SCLK : 1/05124680:06:2:0

Target Body : JUPITER
Target Ra/Dec : 103.43/ 24.53 Deg
S/C to Body Center : 1422341. Km (19.895110 Rj)
Z-axis Pointing (Ra / Dec) : 211.19 / -11.27 Deg

Activity ID: Orbit 22 **OAPEL** JUAURORA **SeqNo** 01-

Title Jupiter southern aurora **Instrument** UVS

Requestor UVS-AWG/W. KENT TOBISKA **Team** UVS **Working Group** AWG

Time System CDS **Load ID** 22A **Calendar Date** 08/13/99 **Week** 85

Start	JEE+CDS 00002158:00:0	99-225/23:20:46.399	JEE+001/12:21:58.666
End	JEE+CDS 00002252:00:0	99-226/00:55:49.066	JEE+001/13:57:01.333
Duration	00000094:00:0	000/01:35:02.667	000/01:35:02.667

Top Label 22JUAURORA01-

Bottom Label realtime

Plot Key UVS **Type** SCI

CDS Bytes 207 **Report Options** BOTH **Scan Platform** Yes

CDS Source OAP **Spin State** DUAL **DMS** No

Observation Objective

Southern Jupiter aurora observations of Lyman-a and H2 emissions near the 80 (S) longitude. We will attempt to capture the Io fluxtube footprint (IFT) and any fluxtube that maps from Europa to Jupiter to understand long-term magnetosphere and Jovian upper atmosphere interaction. This is a realtime observation for 1.5 hours using F/G full-scans at a distance from Jupiter = 22.5 Rj.

GEM Objective Phase 1 - Magnetospheric interactions
Phase 2 - none
Phase 3 - none

Design Detail

```
PSID  CDS  RIM   COMMAND PARAMETERS
176CM 15 -03:00 SCITLM PPB
384AR 00  00:00 COMMNT UVS RIM 0
157AR 38  03:00  CMDRS PLAN_DUR = 91 RIMS; EST_UVS_CMDS = 2 (34UVS)
          04:00      1  UVF:07,SCAN,NORM,NORM,NORM,SAME,0,ON,OFF,ON,ON,OFF,NOOVR,1,00,9C,01,2C
          94:00     91  OFF:07,SCAN,NORM,NORM,NORM,SAME,0,ON,OFF,OFF,OFF,OFF,NOOVR,1,00,9C,00,00
349CO 28  03:69 UVFLSH PACKET,UVS (previous torus data 22TU22NANS01)
165AI 27  04:00 TARGET Lat/Lon = -60/80 (RA/Dec = 109.77/21.64)
UTIL  00  05:00 SCAN TYPE 3 UTILITY
176CN 15  07:00 SCITLM RPB
349CP 28  33:69 UVFLSH PACKET,UVS (1)
349CQ 28  63:69 UVFLSH PACKET,UVS (2)
349CR 28  93:69 UVFLSH PACKET,UVS (3)
```

Tue May 25 15:53:38 1999

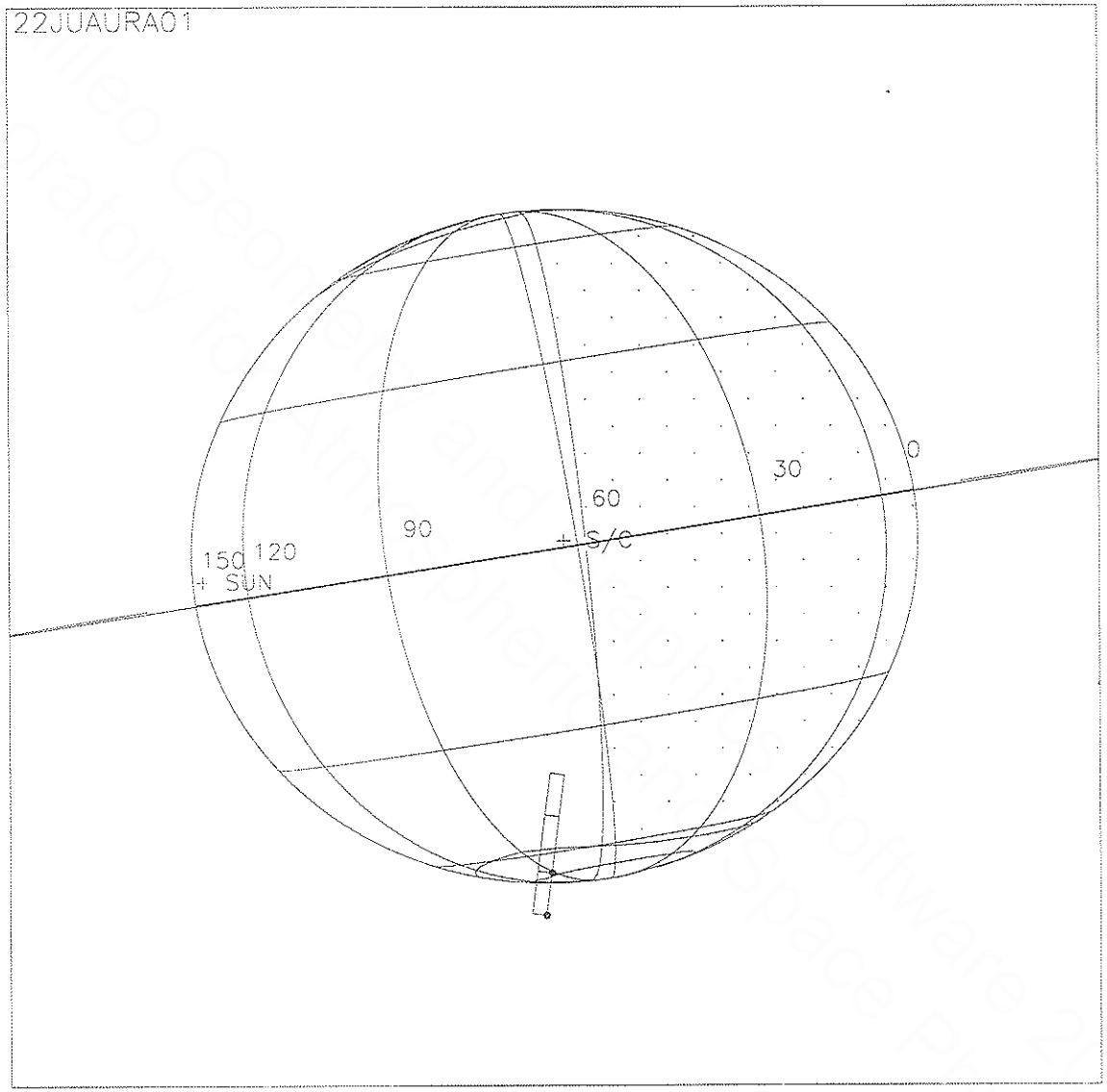

Start UTC_TIME : 1999-225 // 23:24:43.760
No End Time :
Start SCLK : 1/05125024:00:0:0

Target Body : JUPITER
Target Ra/Dec : 109.71/ 23.75 Deg
S/C to Body Center : 1605512. Km (22.457219 Rj)
Z-axis Pointing (Ra / Dec) : 211.19 / -11.27 Deg