Activity ID: Orbit E4 **OAPEL** JUFIXTMB **SeqNo** 01-

Title Fixed local time map **Instrument** UVS

Requestor UVS-AWG/W. KENT TOBISKA **Team** UVS **Working Group** AWG

Time System CDS **Load ID** E4A **Calendar Date** 12/15/96 **Week** 50

Start	JEE-CDS 00004944:00:0	96-350/16:04:32.666	JEE-003/11:18:56.000
End	JEE-CDS 00004340:00:0	96-351/02:15:15.333	JEE-003/01:08:13.333
Duration	00000604:00:0	000/10:10:42.667	000/10:10:42.667

Top Label E4JUFIXTMB01-

Bottom Label realtime

Plot Key UVS **Type** SCI

CDS Bytes 526 **Report Options** BOTH **Scan Platform** Yes

CDS Source OAP **Spin State** DUAL **DMS** No

Observation Objective

Fixed local time map for global FUV spectral coverage over 1 Jupiter rotation on brightside equatorial zone.

Realtime observation at 5 bps for 10.0 hours; G/G full scan. 2 RIMs F/G full scan to remove second order effects. 30 RIMs UVS OFF/FIXED every 60 RIMs for PWS. Expect RTSFMT = A (13:00 - 19:00) and RTSFMT = C (19:00 - 23:00). Distance from Jupiter = 39 Rj. Nominal s/c -Z axis is RA/Dec = 109.0/23.4

Last cn/ck = 153/300.

Design Detail

```
PSID   CDS RIM COMMAND PARAMETERS
384AA   00 000 COMMNT UVS RIM 0
 61AA   28 002+LOOPER DUR = 60 RIMS; REPEAT = 10
349AA   28 003+UVFLSH DISCRD,UVS
157AA   38 003 CMDRS  PLAN_DUR = 31 RIMS; EST_UVS_CMDS = 2
          004      1
34UVS/UVG:07,SCAN,NORM,NORM,NORM,SAME,0,OFF,OFF,ON,ON,OFF,NOOVR,1,2C,9D,00,00
          034     31
34UVS/OFF:C1,FIXED,NORM,NORM,NORM,SAME,0,OFF,OFF,ON,OFF,OFF,NOOVR,1,2C,05,00,00
165AA   72 004 TARGET Lat/lon = 0/30 (use TMC; RA/Dec = 209.11/-13.85)
349AB   28 033+UVFLSH PACKET,UVS
349AC   28 090+UVFLSH PACKET,UVS
157AB   24 091 CMDRS  PLAN_DUR = 1 RIM; EST_UVS_CMDS = 1
          092      1
34UVS/UVF:07,SCAN,NORM,NORM,NORM,SAME,0,ON,OFF,ON,ON,OFF,NOOVR,1,00,9C,01,2C
349AD   28 093+UVFLSH PACKET,UVS
349AE   28 123+UVFLSH DISCRD,UVS
349AF   28 153+UVFLSH PACKET,UVS
349AG   28 213+UVFLSH PACKET,UVS
349AH   28 273+UVFLSH PACKET,UVS
349AI   28 333+UVFLSH PACKET,UVS
```

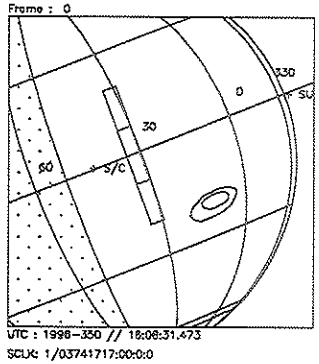

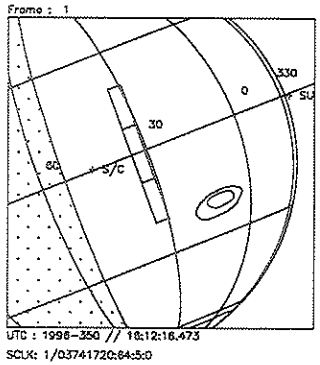

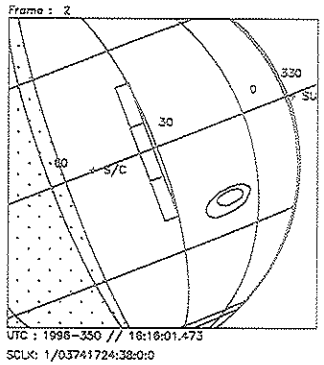

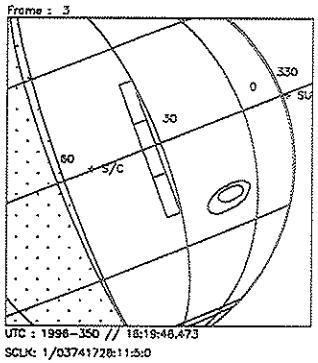

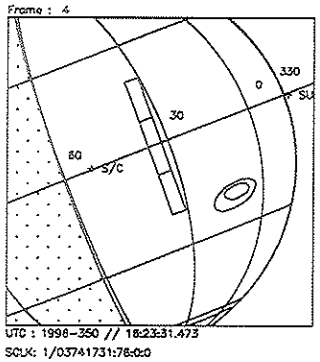

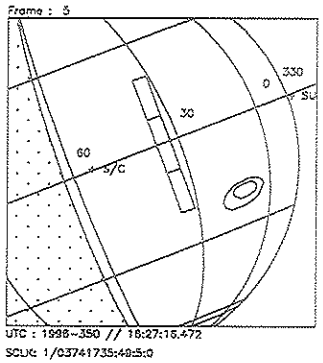

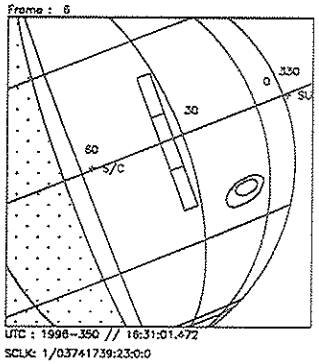

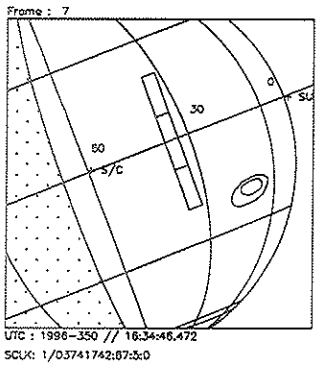

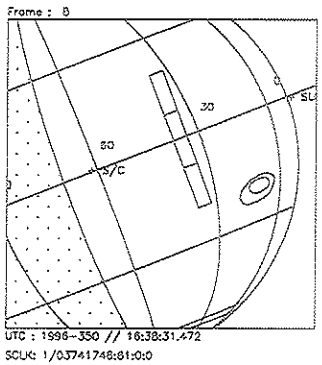

Start UTC_TIME : 1996-350 // 16:08:31.473
No End Time :
Start SCLK : 1/03741717:00:0:0

Target Body : JUPITER
Target Cone/Clock : 105.03/ 89.21 Deg
S/C to Body Center : 2735351. Km (38.260941 Rj)
Z-axis Pointing (Ra / Dec) : 109.00 / 23.40 Deg

Activity ID: Orbit E4 OAPEL JUAURMAP SeqNo 01-

Title Auroral map **Instrument** UVS

Requestor UVS-AWG/W. KENT TOBISKA **Team** UVS **Working Group** AWG

Time System CDS **Load ID** E4A **Calendar Date** 12/16/96 **Week** 51

Start	JEE-CDS 00003880:00:0	96-351/10:00:22.000	JEE-002/17:23:06.666
End	JEE-CDS 00003696:00:0	96-351/13:06:24.666	JEE-002/14:17:04.000
Duration	00000184:00:0	000/03:06:02.666	000/03:06:02.666

Top Label E4JUAURMAP01-

Bottom Label realtime

Plot Key UVS **Type** SCI

CDS Bytes 357 **Report Options** BOTH **Scan Platform** Yes

CDS Source OAP **Spin State** DUAL **DMS** No

Observation Objective

Southern auroral map of dayside - nightside asymmetry.

Realtime observation at 5 bps for 3.0 hours; G/G full-scan and 1 RIM F/G full-scan on brightside. 30 RIMs UVS OFF/FIXED every 60 RIMs for PWS. Expect RTSFMT = A for this observation. Distance from Jupiter = 32 Rj.

Last cn/ck = 153/300.

Design Detail

```
PSID   CDS  RIM  COMMAND  PARAMETERS
384AB   00   00  COMMNT  UVS RIM 0
 61AB   28   02+LOOPER  DUR = 60 RIMS;  REPEAT = 3
349AN   28   03+UVFLSH  DISCRD,UVS
157AC   38   03  CMDRS   PLAN_DUR = 31 RIMS;  EST_UVS_CMDS = 2
             04       1
34UVS/UVG:07,SCAN,NORM,NORM,NORM,SAME,0,OFF,OFF,ON,ON,OFF,NOOVR,1,2C,9D,00,00
             34      31
34UVS/OFF:C1,FIXED,NORM,NORM,NORM,SAME,0,OFF,OFF,ON,OFF,OFF,NOOVR,1,2C,05,00,00
165AB   36   04  TARGET  Lat/lon = -60/320 (RA/Dec = 215.78/-17.75)
117AA   63   04  CSMOS   Lat/lon = (4 slews during brightside; 2 during darkside)
349AO   28   33+UVFLSH  PACKET,UVS
349AP   28   90+UVFLSH  PACKET,UVS
157AD   24   91  CMDRS   PLAN_DUR = 1 RIM;  EST_UVS_CMDS = 1
             92       1
34UVS/UVF:07,SCAN,NORM,NORM,NORM,SAME,0,ON,OFF,ON,ON,OFF,NOOVR,1,00,9C,01,2C
349AQ   28   93+UVFLSH  PACKET,UVS
349AR   28  123+UVFLSH  DISCRD,UVS
349AS   28  153+UVFLSH  PACKET,UVS
```

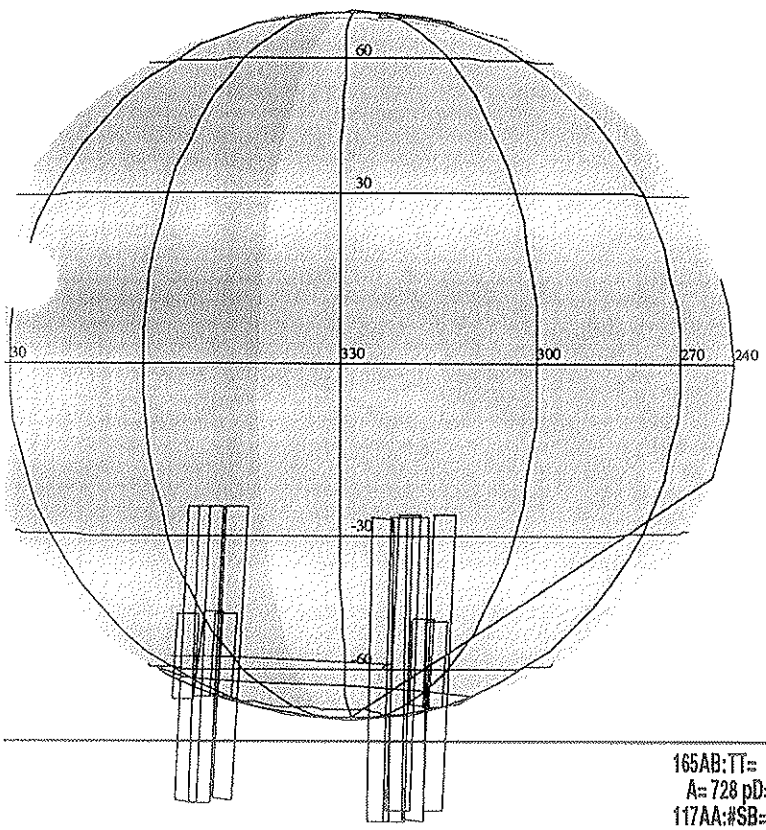

165AB:TT= 0 TMC= 1 C= 0.00 XC= 0.00 BS= 0/5182 TC= 1(-60 320)
A= 728 pD= 182 SR=17.450 RA50=215.85 DEC50=-17.75 cone=111.99 clock= 87.65
117AA:#SB= 3 OR= 0.010 RR=12.000 BM=F RC= 1 BS= 0/5182
1:#s= 4 Cs= 0.00 XCs= 0.00 Cr= 4.00 XCr= 0.00 sD= 5278 rD= 182
2:#s= 1 Cs= 0.00 XCs= 0.00 Cr= 18.00 XCr= 0.00 sD= 16 rD= 160
3:#s= 2 Cs= 0.00 XCs= 0.00 Cr= 4.00 XCr= 0.00 sD= 5278 rD= 182

ESIGN G2.0 kent :10/31/1996 10:19:24

ILE:P.E4JUAURMAP01

ENTRAL BODY:JUPITER III

INI:m.E4JUAURMAP01

'C EPH:/DATA/NAVIO/T-960909-TOUR.NS

.APSIS: THINNING: :UVS 1

TART:JEE 96-354/03:23:28.666 -CDS 03876:00:0 BODY PLOT TIME:TARGET-TIME D= 182 S= 1.000

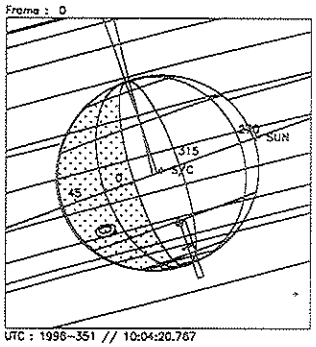

UTC : 1996-351 // 10:04:20.767
SCLK: 1/03742781:00:0:0

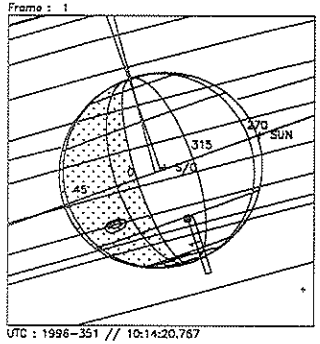

UTC : 1996-351 // 10:14:20.767
SCLK: 1/03742790:81:0:0

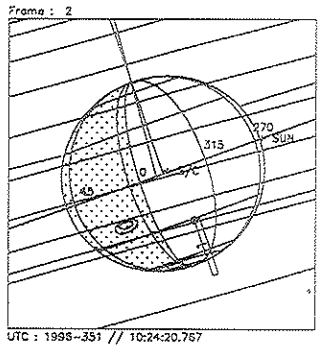

UTC : 1996-351 // 10:24:20.767
SCLK: 1/03742800:71:0:0

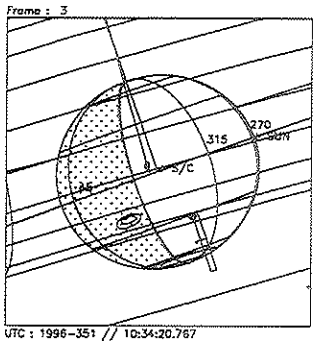

UTC : 1996-351 // 10:34:20.767
SCLK: 1/03742810:61:0:0

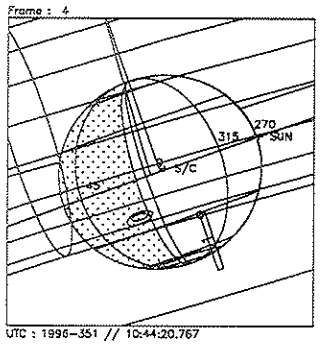

UTC : 1996-351 // 10:44:20.767
SCLK: 1/03742820:51:0:0

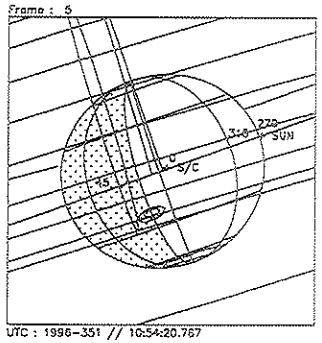

UTC : 1996-351 // 10:54:20.767
SCLK: 1/03742830:41:0:0

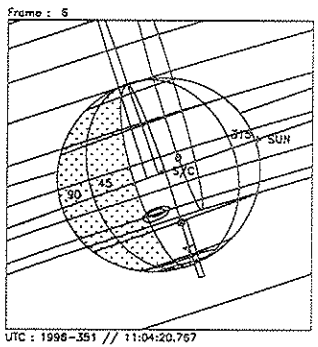

UTC : 1996-351 // 11:04:20.767
SCLK: 1/03742840:31:0:0

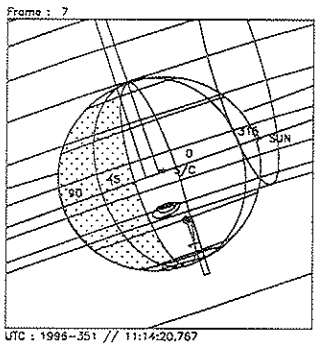

UTC : 1996-351 // 11:14:20.767
SCLK: 1/03742850:21:0:0

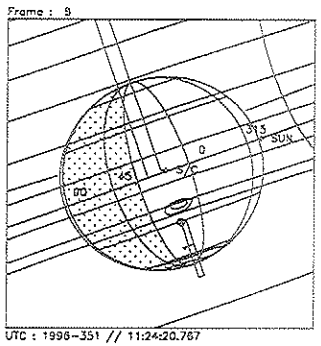

UTC : 1996-351 // 11:24:20.767
SCLK: 1/03742860:11:0:0

Start UTC_TIME : 1996-351 // 10:04:20.767
End UTC_TIME : 1996-351 // 12:36:00.761
Start SCLK : 1/03742781:00:0:0
Delta Time between FOV : 600.0000
FOVs : N/G Channel(0.5x0.5)

Target Body : JUPITER
Target Cone/Clock : 112.14/ 89.19 Deg
S/C to Body Center : 2324285. Km (32.511121 Rj)
Z-axis Pointing (Ra / Dec) : 109.00 / 23.40 Deg

Frame : 9

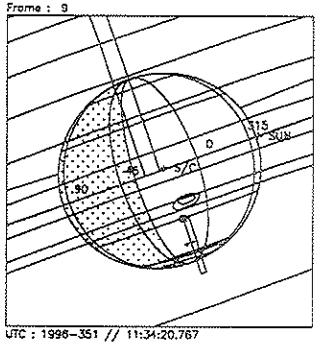

UTC : 1996-351 // 11:34:20.767
SCLK: 1/03742870:01:0:0

Frame : 10

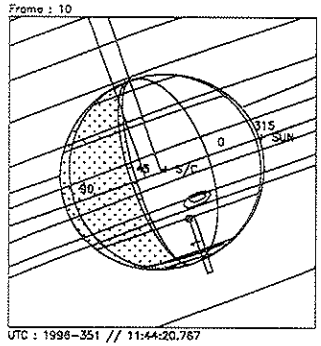

UTC : 1996-351 // 11:44:20.767
SCLK: 1/03742879:82:0:0

Frame : 11

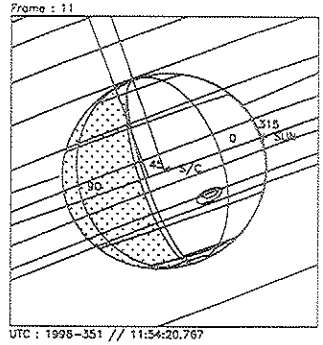

UTC : 1996-351 // 11:54:20.767
SCLK: 1/03742889:72:0:0

Frame : 12

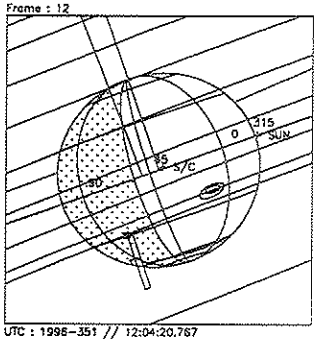

UTC : 1996-351 // 12:04:20.767
SCLK: 1/03742899:62:0:1

Frame : 13

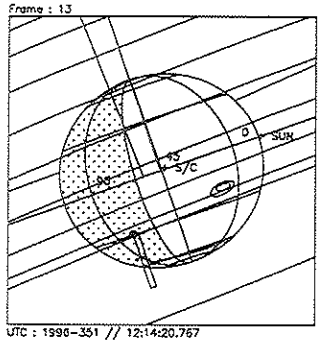

UTC : 1996-351 // 12:14:20.767
SCLK: 1/03742909:52:0:1

Frame : 14

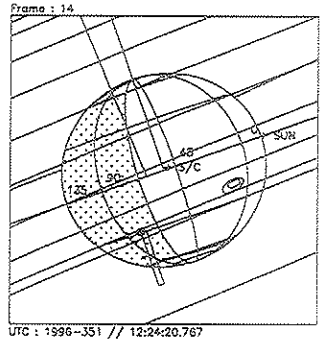

UTC : 1996-351 // 12:24:20.767
SCLK: 1/03742919:42:0:1

Frame : 15

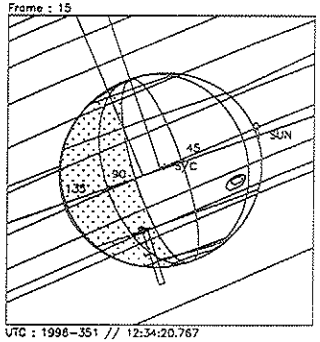

UTC : 1996-351 // 12:34:20.767
SCLK: 1/03742929:32:0:1

Start UTC_TIME : 1996-351 // 10:04:20.767
End UTC_TIME : 1996-351 // 12:36:00.761
Start SCLK : 1/03742781:00:0:0
Delta Time between FOV : 600.0000
FOVs : N/G Channel(0.5x0.5)

Target Body : JUPITER
Target Cone/Clock : 112.86/ 89.19 Deg
S/C to Body Center : 2287844. Km (32.001405 Rj)
Z-axis Pointing (Ra / Dec) : 109.00 / 23.40 Deg

Activity ID: Orbit E4 **OAPEL** JUFIXLON **SeqNo** 01-

Title Fixed longitude map **Instrument** UVS

Requestor UVS-AWG/W. KENT TOBISKA **Team** UVS **Working Group** AWG

Time System CDS **Load ID** E4A **Calendar Date** 12/16/96 **Week** 51

Start	JEE-CDS 00003156:00:0	96-351/22:12:24.666	JEE-002/05:11:04.000
End	JEE-CDS 00002852:00:0	96-352/03:19:47.333	JEE-002/00:03:41.333
Duration	00000304:00:0	000/05:07:22.667	000/05:07:22.667

Top Label E4JUFIXLON01-

Bottom Label realtime

Plot Key	UVS	**Type**	SCI		
CDS Bytes	483	**Report Options**	BOTH	**Scan Platform**	Yes
CDS Source	OAP	**Spin State**	DUAL	**DMS**	No

Observation Objective

Global mapping of equatorial H Ly-a and off planet to obtain sky background on torus region.

Realtime observation at 10 bps for 5.0 hours; G/G Ly-a 88 step 2 posn miniscan. 10 RIMs UVS OFF/FIXED every 30 RIMs for PWS. Expect RTSFMT = C. Distance from Jupiter = 28 Rj.

Last cn/ck = 153/300.

Design Detail

```
PSID   CDS  RIM  COMMAND  PARAMETERS
384AE   00   00  COMMNT UVS RIM 0
 61AC   28   02+LOOPER DUR = 30 RIMS; REPEAT = 10
349AT   28   03+UVFLSH DISCRD,UVS
157AF   38   03 CMDRS   PLAN_DUR = 21 RIMS; EST_UVS_CMDS = 2
          04       1
34UVS/UVG:DF,FIXED,NORM,NORM,NORM,SAME,0,OFF,OFF,ON,ON,OFF,NOOVR,1,2C,7D,00,2C
          24      21
34UVS/OFF:C1,FIXED,NORM,NORM,NORM,SAME,0,OFF,OFF,ON,OFF,OFF,NOOVR,1,2C,05,00,00
165AJ   36   04 TARGET Lat/lon = 0/90 (sit and stare - no TMC) (RA/Dec = 224.46/-18.96)
117AB   37   04 CSMOS   Lat/lon = (9 strips on darkside)
349AU   28   23+UVFLSH PACKET,UVS (longitudes  90- 96)
349AV   28   53+UVFLSH PACKET,UVS (longitudes 109-114)
349AW   28   83+UVFLSH PACKET,UVS (longitudes 127-132)
349AX   28  113+UVFLSH PACKET,UVS (longitudes 146-151)
349AY   28  143+UVFLSH PACKET,UVS (longitudes 164-169)
349AZ   28  173+UVFLSH PACKET,UVS (longitudes 181-186)
349KA   28  203+UVFLSH PACKET,UVS (longitudes 199-204)
349KB   28  233+UVFLSH PACKET,UVS (longitudes 217-222)
349KC   28  263+UVFLSH PACKET,UVS (longitudes 234-239)
165AK   36  274 TARGET RA/Dec = 231/-21 (torus background) (sit and stare - no TMC)
```

Fri Nov 1 19:10:28 1996

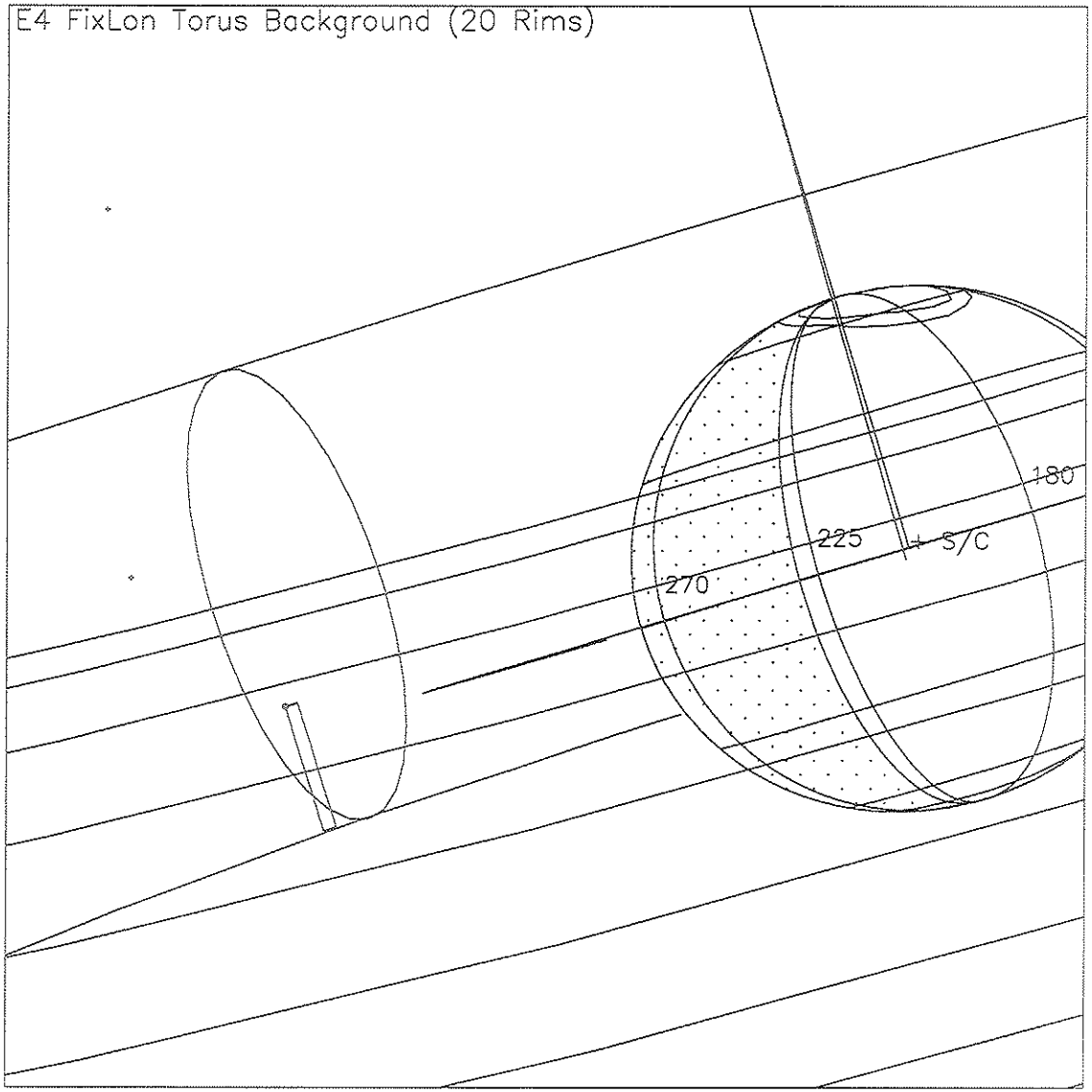

Start UTC_TIME : 1996-352 // 02:49:23.396
No End Time :
Start SCLK : 1/03743775:00:0:0

Target Body : JUPITER
Target Cone/Clock : 121.72/ 89.17 Deg
S/C to Body Center : 1897204. Km (26.537293 Rj)
Z-axis Pointing (Ra / Dec) : 109.00 / 23.40 Deg

Frame : 0

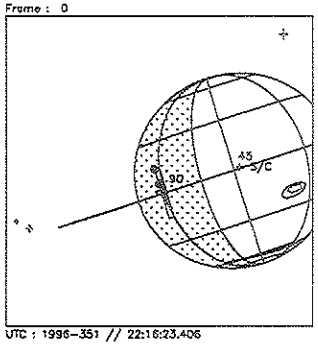

UTC : 1996-351 // 22:16:23.406
SCLK: 1/03743505:00:0:0

Frame : 1

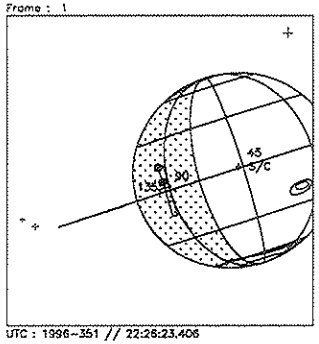

UTC : 1996-351 // 22:26:23.406
SCLK: 1/03743514:81:0:0

Frame : 2

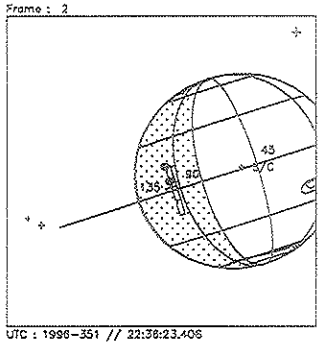

UTC : 1996-351 // 22:36:23.406
SCLK: 1/03743524:71:0:0

Frame : 3

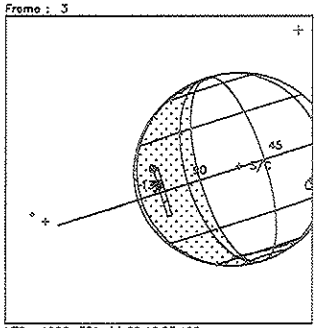

UTC : 1996-351 // 22:46:23.406
SCLK: 1/03743534:61:0:0

Frame : 4

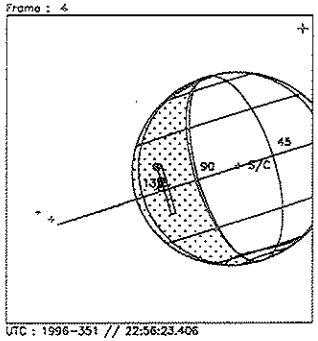

UTC : 1996-351 // 22:56:23.406
SCLK: 1/03743544:51:0:0

Frame : 5

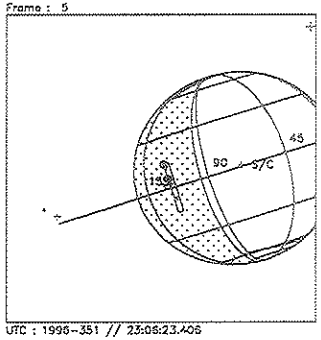

UTC : 1996-351 // 23:06:23.406
SCLK: 1/03743554:41:0:0

Frame : 6

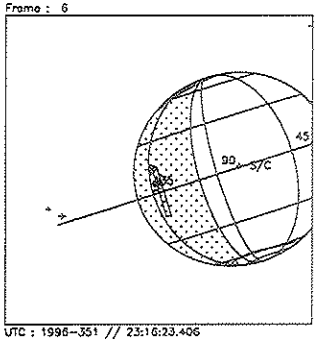

UTC : 1996-351 // 23:16:23.406
SCLK: 1/03743564:31:0:0

Frame : 7

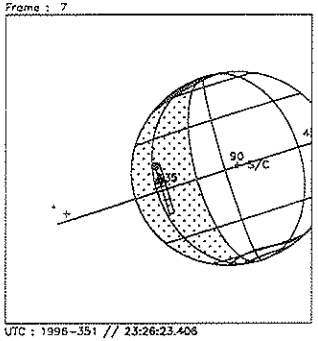

UTC : 1996-351 // 23:26:23.406
SCLK: 1/03743574:21:0:0

Frame : 8

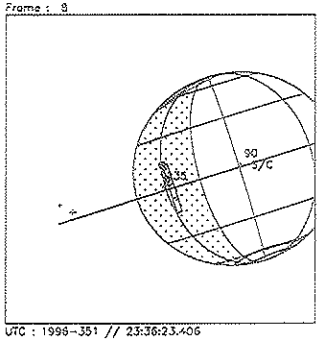

UTC : 1996-351 // 23:36:23.406
SCLK: 1/03743584:11:0:0

Start UTC_TIME : 1996-351 // 22:16:23.406
End UTC_TIME : 1996-352 // 02:39:16.730
Start SCLK : 1/03743505:00:0:0
Delta Time between FOV : 600.0000
FOVs : F Channel(0.1x0.4), N/G Channel(0.5x0.5)

Target Body : JUPITER
Target Cone/Clock : 118.72/ 89.18 Deg
S/C to Body Center : 2017724. Km (28.223077 Rj)
Z-axis Pointing (Ra / Dec) : 109.00 / 23.40 Deg

Frame : 9

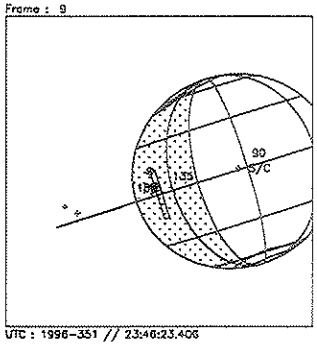

UTC : 1996-351 // 23:46:23.406
SCLK: 1/03743594:01:0:0

Frame : 10

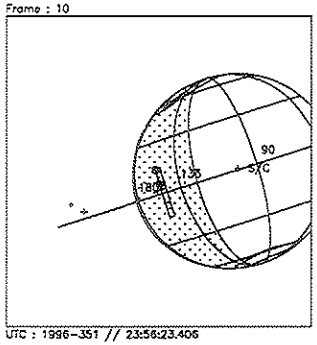

UTC : 1996-351 // 23:56:23.406
SCLK: 1/03743603:82:0:0

Frame : 11

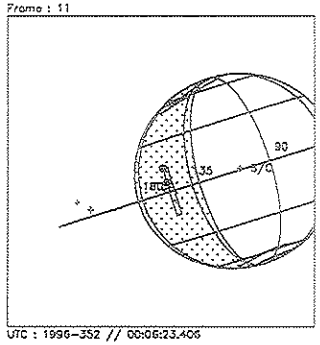

UTC : 1996-352 // 00:06:23.406
SCLK: 1/03743613:72:0:0

Frame : 12

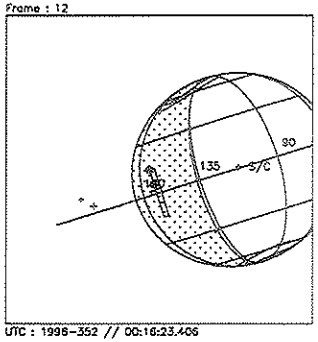

UTC : 1996-352 // 00:16:23.406
SCLK: 1/03743623:62:0:1

Frame : 13

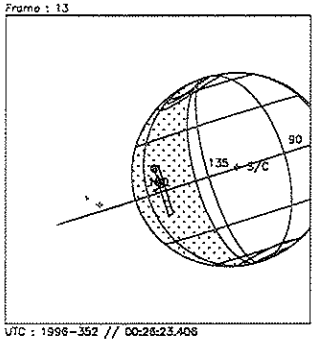

UTC : 1996-352 // 00:26:23.406
SCLK: 1/03743633:52:0:1

Frame : 14

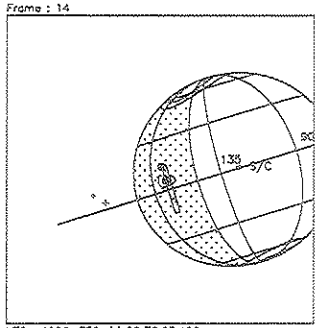

UTC : 1996-352 // 00:36:23.406
SCLK: 1/03743643:42:0:1

Frame : 15

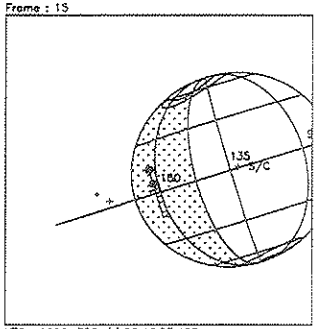

UTC : 1996-352 // 00:46:23.406
SCLK: 1/03743653:32:0:1

Frame : 16

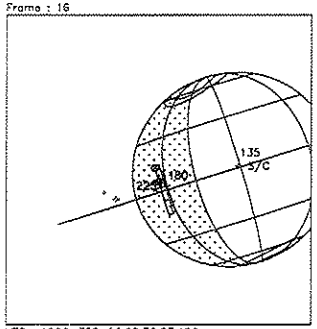

UTC : 1996-352 // 00:56:23.406
SCLK: 1/03743663:22:0:1

Frame : 17

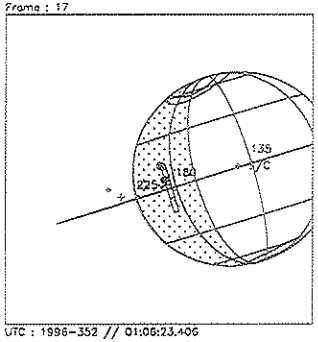

UTC : 1996-352 // 01:06:23.406
SCLK: 1/03743673:12:0:1

Start UTC_TIME : 1996-351 // 22:16:23.406
End UTC_TIME : 1996-352 // 02:39:16.730
Start SCLK : 1/03743505:00:0:0
Delta Time between FOV : 600.0000
FOVs : F Channel(0.1x0.4), N/G Channel(0.5x0.5)

Target Body : JUPITER
Target Cone/Clock : 119.67/ 89.17 Deg
S/C to Body Center : 1978377. Km (27.672706 Rj)
Z-axis Pointing (Ra / Dec) : 109.00 / 23.40 Deg

Frame : 18

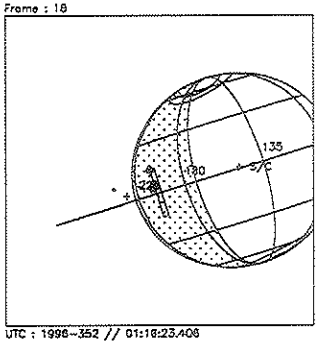

UTC : 1996-352 // 01:16:23.406
SCLK: 1/03743883:02:0:1

Frame : 19

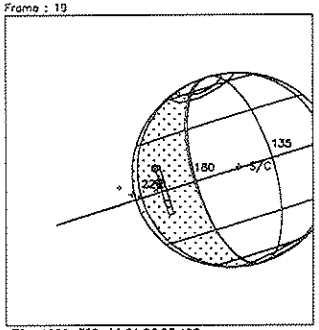

UTC : 1996-352 // 01:26:23.406
SCLK: 1/03743892:83:0:1

Frame : 20

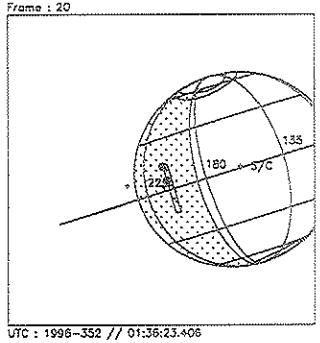

UTC : 1996-352 // 01:36:23.406
SCLK: 1/03743702:73:0:1

Frame : 21

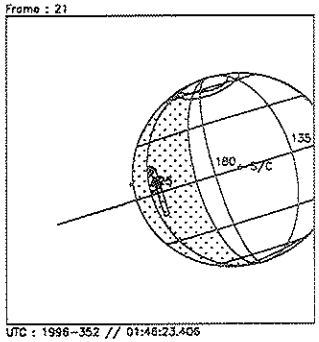

UTC : 1996-352 // 01:46:23.406
SCLK: 1/03743712:63:0:1

Frame : 22

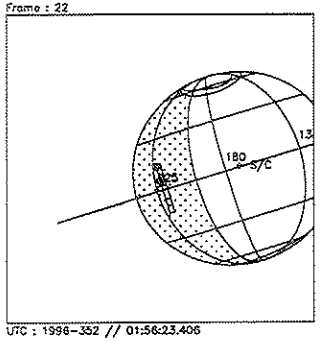

UTC : 1996-352 // 01:56:23.406
SCLK: 1/03743722:53:0:1

Frame : 23

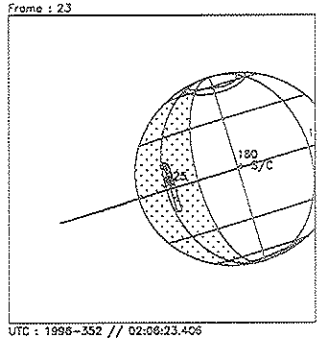

UTC : 1996-352 // 02:06:23.406
SCLK: 1/03743732:43:0:1

Frame : 24

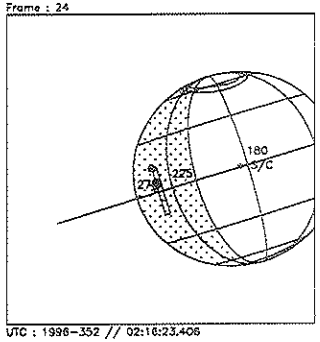

UTC : 1996-352 // 02:16:23.406
SCLK: 1/03743742:33:0:1

Frame : 25

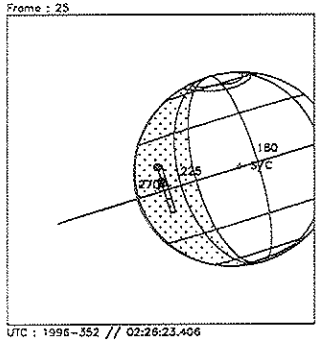

UTC : 1996-352 // 02:26:23.406
SCLK: 1/03743752:23:0:1

Frame : 26

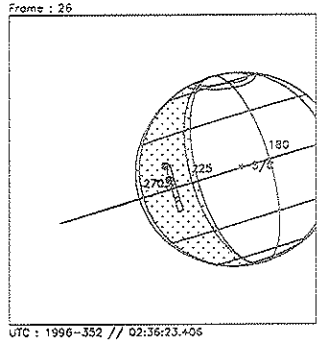

UTC : 1996-352 // 02:36:23.406
SCLK: 1/03743762:13:0:1

Start UTC_TIME : 1996-351 // 22:16:23.406
End UTC_TIME : 1996-352 // 02:39:16.730
Start SCLK : 1/03743505:00:0:0
Delta Time between FOV : 600.0000
FOVs : F Channel(0.1x0.4), N/G Channel(0.5x0.5)

Target Body : JUPITER
Target Cone/Clock : 120.66/ 89.17 Deg
S/C to Body Center : 1938653. Km (27.117057 Rj)
Z-axis Pointing (Ra / Dec) : 109.00 / 23.40 Deg

Activity ID: Orbit E4 **OAPEL** JUBFRDMP **SeqNo** 04-

Title FEATURE TRACK BUFFER DUMP **Instrument** UVS

Requestor UVS-AWG/W. KENT TOBISKA **Team** UVS **Working Group** AWG

Time System UTC **Load ID** E4A **Calendar Date** 12/17/96 **Week** 51

Start	JFC-CDS 00000674:05:0	96-352/15:30:45.466	JFC-000/11:21:33.267
End	JFC-CDS 00000671:79:0	96-352/15:32:58.133	JFC-000/11:19:20.600
Duration	00000002:17:0	000/00:02:12.667	000/00:02:12.667

Top Label E4JUBFRDMP04-

Bottom Label realtime

Plot Key	UVS	**Type**	SCI		
CDS Bytes	28	**Report Options**	BOTH	**Scan Platform**	No
CDS Source	OAP	**Spin State**	DUAL	**DMS**	Yes

Observation Objective

AWG feature track buffer dump to tape for benefit of FPSG.

[NOTE: MWG moveable.]

Design Detail

```
PSID   CDS RIM COMMAND PARAMETERS
384___  00  00 COMMNT UVS RIM 0
411AD   28  00 BFRDUMP PAUSE_PB = FALSE, SLEW_DMS = FALSE, RESUME_PB = FALSE
```

Activity ID: Orbit E4 OAPEL JUFTKR1E SeqNo 11-

Title HOT SPOT FEATURE TRACK **Instrument** UVS

Requestor UVS-AWG/W. KENT TOBISKA **Team** UVS **Working Group** AWG

Time System CDS **Load ID** E4A **Calendar Date** 12/17/96 **Week** 51

Start	JFC-CDS 00000633:00:0	96-352/16:12:16.733	JFC-000/10:40:02.000
End	JFC-CDS 00000627:00:0	96-352/16:18:20.733	JFC-000/10:33:58.000
Duration	00000006:00:0	000/00:06:04.000	000/00:06:04.000

Top Label E4JUFTKR1E11-

Bottom Label realtime

Plot Key UVS **Type** SCI

CDS Bytes 243 **Report Options** BOTH **Scan Platform** No

CDS Source OAP **Spin State** DUAL **DMS** No

Observation Objective

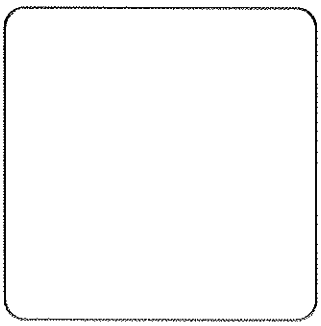

AWG hot spot (6.5/337 lat/lon) feature track (JFC epoch), rotation 1, solar phase angle 55 deg, emission angle 1, follows 4 color SSI (E4JSHOTSPT01) 1x4.

Realtime observation; full F/F scan for two observations and 176 step G/G miniscan covering 1496-1755 A hydrocarbons for two observations. Distance from Jupiter = 21 Rj.

Last cn/ck = TBD.

(4)	(3)	(2)	(1)	SSI
6.6/344	6.5/335	6.5/327	6.4/318	

(1)	(2)	(3)	UVS
6.6/344	6.5/338	6.4/331	

Design Detail

```
PSID   CDS RIM COMMAND PARAMETERS
384AF   00   00 COMMNT UVS RIM 0
165IA   00 -03 TARGET Lat/Lon = 6.5/331 (RA/Dec = 142.06/-29.03)
118IA   00 -03 SMOS    (starting RA/Dec = 238.16/-21.96)
349KE   28 -02+UVFLSH DISCRD,UVS
157AG   94 -01 CMDRS   PLAN_DUR = 47 RIMS; EST_UVS_CMDS = 6
           00      1
34UVS/UVF:07,SCAN,NORM,NORM,NORM,SAME,0,ON,OFF,OFF,ON,OFF,NOOVR,1,00,9C,00,00
           06      7
34UVS/OFF:C1,FIXED,NORM,NORM,NORM,SAME,0,OFF,OFF,ON,OFF,OFF,NOOVR,1,2C,05,00,00
           16      17
34UVS/UVF:07,SCAN,NORM,NORM,NORM,SAME,0,ON,OFF,OFF,ON,OFF,NOOVR,1,00,9C,00,00
           22      23
34UVS/OFF:C1,FIXED,NORM,NORM,NORM,SAME,0,OFF,OFF,ON,OFF,OFF,NOOVR,1,2C,05,00,00
           25      26
34UVS/UVG:E3,FIXED,NORM,NORM,NORM,SAME,0,OFF,OFF,ON,ON,OFF,NOOVR,1,1A,8E,00,00
           45      46
34UVS/OFF:C1,FIXED,NORM,NORM,NORM,SAME,0,OFF,OFF,ON,OFF,OFF,NOOVR,1,2C,05,00,00
117AC   37   00 CSMOS   3 repositions; 1 subcsmos (-5.7 mrad cone_del_R)
349KF   28   00+UVFLSH PACKET,UVS (1)
349KG   28   02+UVFLSH PACKET,UVS (2)
```

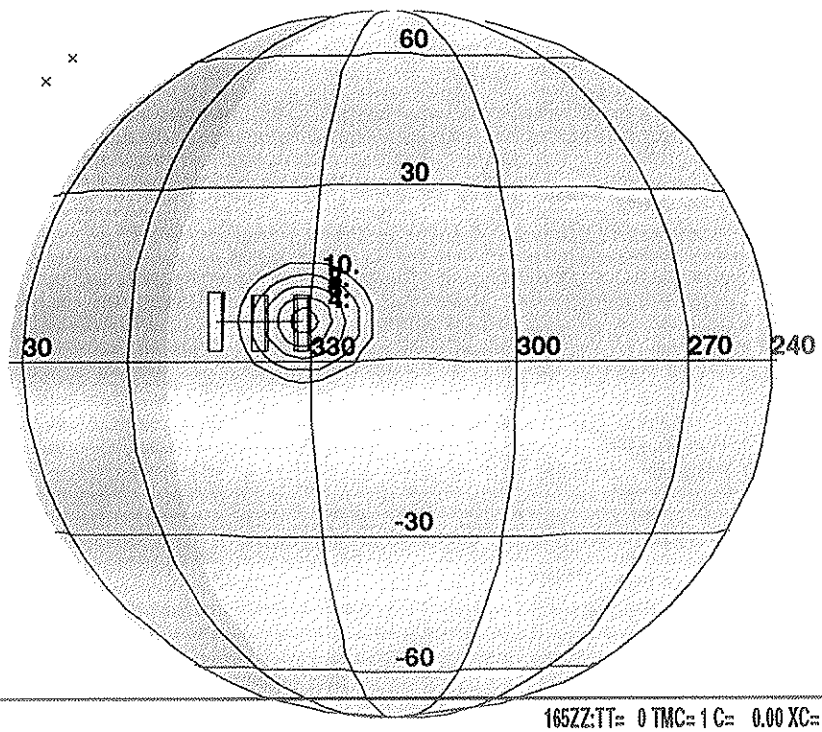

165ZZ:TT= 0 TMC= 1 C= 0.00 XC= 0.00 BS= 0/0052 TC= 1(6.6 344)
A= 182 pD= 182 SR=17.450 RA50=239.50 DEC50=-22.19 cone=134.58 clock= 89.52
117AC:#SB= 1 OR= 1.000 RR=12.000 BM=F RC= 1 BS= 0/0598
1:#s= 3 Cs= 0.00 XCs= 0.00 Cr= -5.70 XCr= 0.00 sD= 272 rD= 92

ESIGN G2.0 kent :10/21/1996 23:59:27

ILE:P.E4JUFTKR1E11

ENTRAL BODY:JUPITER III

INI:m.E4JUFTKR1E11

EPH:/DATA/NAVIO/T-960909-TOUR.NS

APSIS: THINNING: :UVS 1

TART:JFC 96-353/02:52:18.733 -CDS 636:00:0 BODY PLOT TIME:TARGET-TIME D= 182 S= 1.000

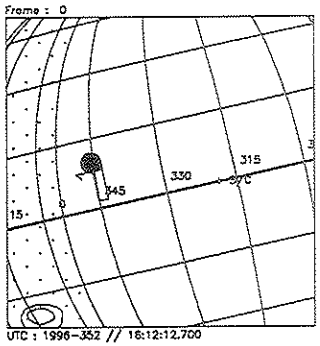

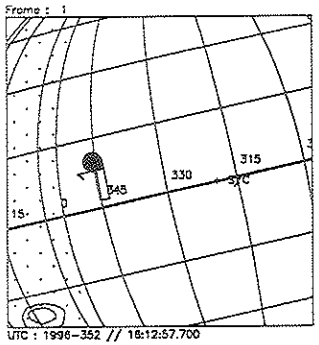

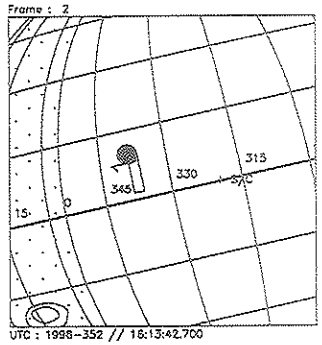

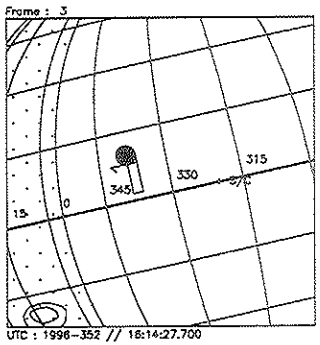

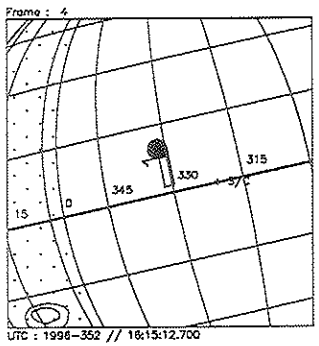

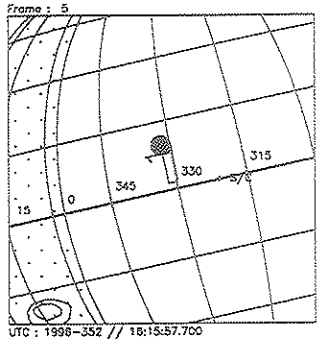

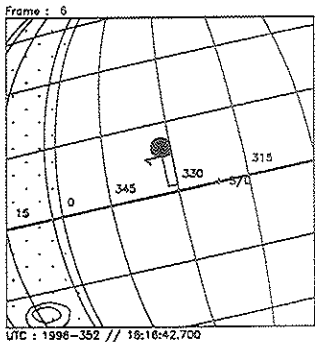

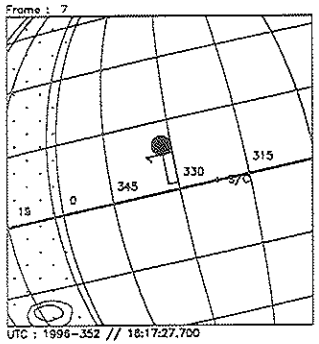

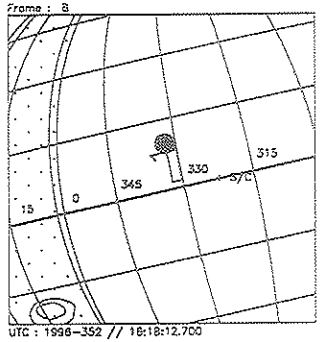

Start UTC_TIME : 1996-352 // 16:12:12.700
End UTC_TIME : 1996-352 // 16:18:16.700
Start SCLK : 1/03744569:00:0:0
Delta Time between FOV : 45.00000
FOVs : F Channel(0.1x0.4)

Target Body : JUPITER
Target Cone/Clock : 133.41/ 89.13 Deg
S/C to Body Center : 1522354. Km (21.294045 Rj)
Z-axis Pointing (Ra / Dec) : 109.00 / 23.40 Deg

Activity ID: Orbit E4 OAPEL JUFTKR1E SeqNo 12-

Title HOT SPOT FEATURE TRACK **Instrument** UVS

Requestor UVS-AWG/W. KENT TOBISKA **Team** UVS **Working Group** AWG

Time System CDS **Load ID** E4A **Calendar Date** 12/17/96 **Week** 51

Start	JFC-CDS 00000617:00:0	96-352/16:28:27.400	JFC-000/10:23:51.333
End	JFC-CDS 00000611:00:0	96-352/16:34:31.400	JFC-000/10:17:47.333
Duration	00000006:00:0	000/00:06:04.000	000/00:06:04.000

Top Label E4JUFTKR1E12-

Bottom Label realtime

Plot Key UVS **Type** SCI

CDS Bytes 121 **Report Options** BOTH **Scan Platform** No

CDS Source OAP **Spin State** DUAL **DMS** No

Observation Objective

AWG hot spot (6.5/337 lat/lon) feature track (JFC epoch), rotation 1, solar phase angle 55 deg, emission angle 1, follows 2 color SSI (E4JSHOTSPS01) 1x3.

Realtime observation; full F/F scan for two observations and 176 step G/G miniscan covering 1496-1755 A hydrocarbons for two observations. Distance from Jupiter = 21 Rj.

Last cn/ck = TBD.

(3)	(2)	(1)	SSI
16/339	16/330	16/321	

(1)	(2)	(3)	UVS
16/338	16/330	16/321	

Design Detail

PSID	CDS	RIM	COMMAND PARAMETERS
384AG	00	00	COMMNT UVS RIM 0
165IB	00	-02	TARGET Lat/lon = 16/321 (RA/Dec = 115.35/-6.63)
118IB	00	-02	SMOS (starting RA/Dec = 238.56/-21.62)
117AD	37	00	CSMOS 3 repositions; 1 subcsmos (-7.41 mrad cone_del_R)
349KJ	28	00	+UVFLSH PACKET,UVS (4)
349KK	28	02	+UVFLSH PACKET,UVS (5)
349KL	28	04	+UVFLSH PACKET,UVS (6)

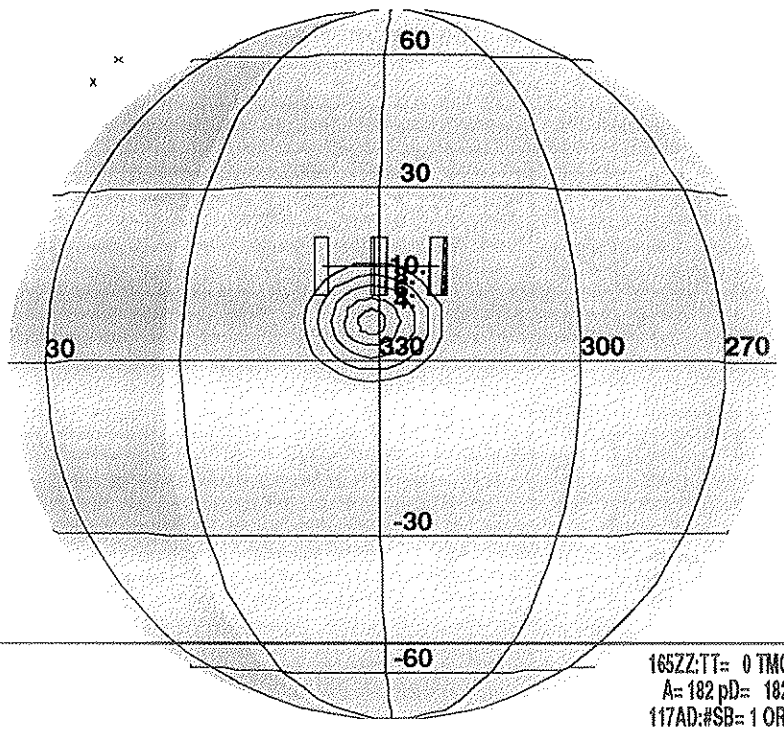

165ZZ:TT= 0 TMC= 1 C= 0.00 XC= 0.00 BS= 0/3146 TC= 1(16 338)
A= 182 pD= 182 SR=17.450 RA50=239.13 DEC50=-21.70 cone=134.14 clock= 90.09
117AD:#SB= 1 OR= 1.000 RR=12.000 BM=F RC= 1 BS= 0/3510
1:#s= 3 Cs= 0.00 XCs= 0.00 Cr= -7.40 XCr= 0.00 sD= 272 rD= 92

ESIGN G2.0 kent :10/22/1996 0:13:46

ILE:P.E4JUFTKR1E12

ENTRAL BODY:JUPITER III

INI:m.E4JUFTKR1E12

/^ SPH:/DATA/NAVIO/T-960909-TOUR.NS

.APSIS: THINNING: :UVS 1

TART:JFC 96-353/02:52:18.733 -CDS 619:00:0 BODY PLOT TIME:TARGET-TIME D= 182 S= 1.000

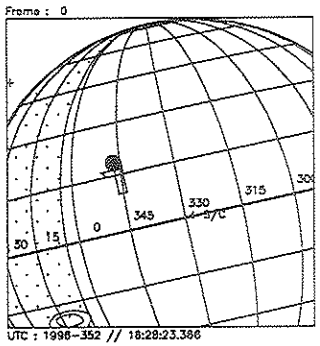

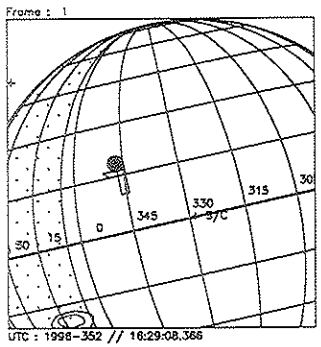

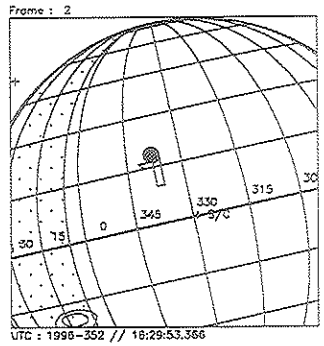

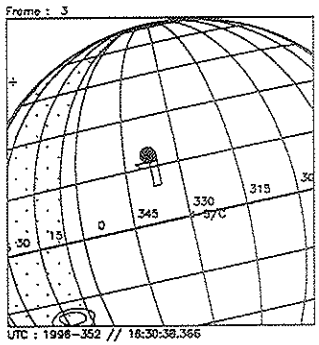

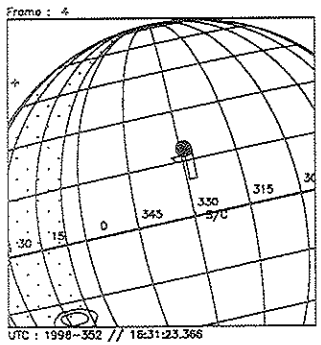

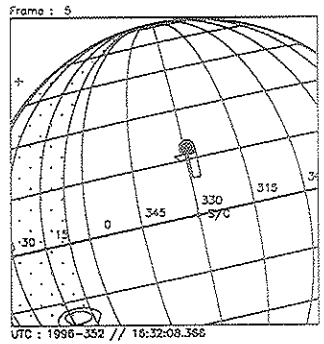

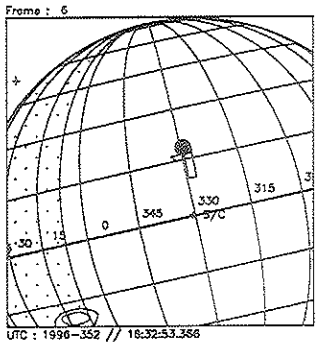

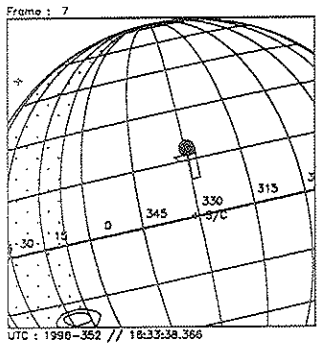

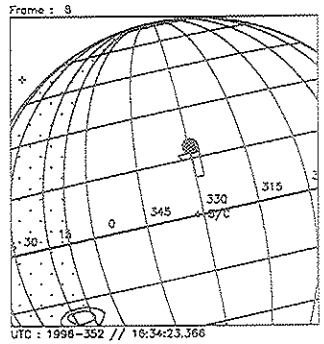

Start UTC_TIME : 1996-352 // 16:28:23.366
End UTC_TIME : 1996-352 // 16:34:27.366
Start SCLK : 1/03744585:00:0:0
Delta Time between FOV : 45.00000
FOVs : F Channel(0.1x0.4)

Target Body : JUPITER
Target Ra/Dec : 238.52/-22.29 Deg
S/C to Body Center : 1514494. Km (21.184111 Rj)
Z-axis Pointing (Ra / Dec) : 109.00 / 23.40 Deg

Activity ID: Orbit E4	**OAPEL** JUFTKR1E		**SeqNo** 13-
Title	HOT SPOT FEATURE TRACK		**Instrument** UVS
Requestor	UVS-AWG/W. KENT TOBISKA	**Team** UVS	**Working Group** AWG

Time System CDS	**Load ID** E4A	**Calendar Date** 12/17/96	**Week** 51		
Start	JFC-CDS 00000608:00:0	96-352/16:37:33.400	JFC-000/10:14:45.333		
End	JFC-CDS 00000599:00:0	96-352/16:46:39.400	JFC-000/10:05:39.333		
Duration	00000009:00:0	000/00:09:06.000	000/00:09:06.000		

Top Label	E4JUFTKR1E13-				
Bottom Label	realtime				
Plot Key	UVS	**Type**	SCI		
CDS Bytes	64	**Report Options**	BOTH	**Scan Platform**	No
CDS Source	OAP	**Spin State**	DUAL	**DMS**	No

Observation Objective

AWG hot spot (6.5/337 lat/lon) feature track (JFC epoch), rotation 1, solar phase angle 55 deg, emission angle 1, independent UVS observation.

Realtime observation; G/G mini scan on hot spot set up by observations preceeding this one. Distance from Jupiter = 21 Rj.

Last cn/ck = TBD.

Design Detail

```
PSID   CDS RIM COMMAND PARAMETERS
384AH   00  00 COMMNT UVS RIM 0
165AN   36  01 TARGET Lat/lon = 6.5/331 (RA/Dec = 238.49/-22.02)
349KM   28  08+UVFLSH PACKET,UVS (7)
```

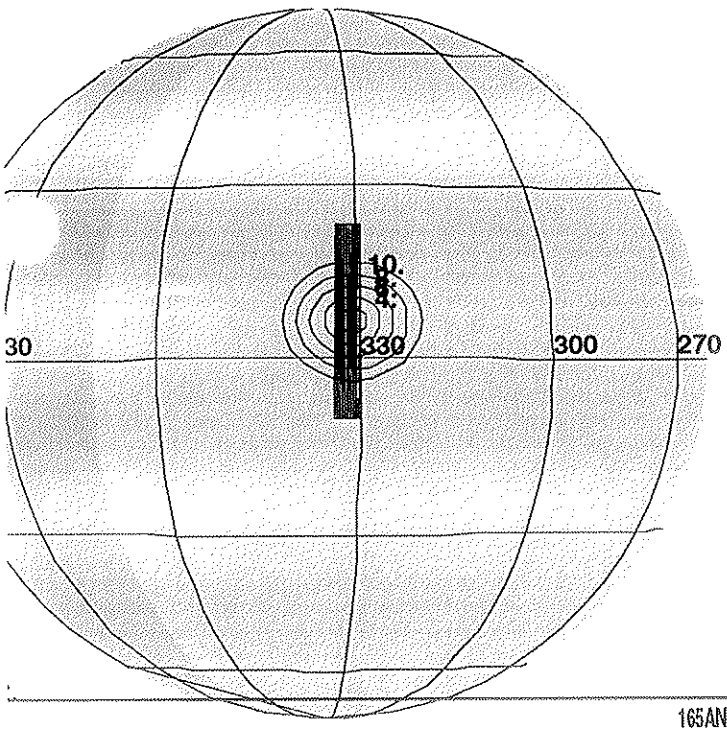

165AN:TT= 0 TMC=1 C= 0.00 XC= 0.00 BS=0/5330 TC=1(6.5 331)
A=182 pD= 182 SR=17.450 RA50=238.56 DEC50=-22.00 cone=133.69 clock=89.54

ESIGN G2.0 kent :10/22/1996 0:16:14

ILE:P.E4JUFTKR1E13

ENTRAL BODY:JUPITER III

INI:m.E4JUFTKR1E13

PH:/DATA/NAVIO/T-960909-TOUR.NS

APSIS: THINNING: :UVS 1

TART:JFC 96-353/02:52:18.733 -CDS 607:00:0 BODY PLOT TIME:TARGET-TIME D= 182 S= 1.000

Activity ID:	**Orbit** E4	**OAPEL** JUFTKR1E		**SeqNo** 14-	
Title	HOT SPOT FEATURE TRACK			**Instrument**	UVS
Requestor	UVS-AWG/W. KENT TOBISKA	**Team**	UVS	**Working Group**	AWG

Time System	CDS	**Load ID**	E4A	**Calendar Date**	12/17/96 Week 51

Start	JFC-CDS 00000599:00:0	96-352/16:46:39.400	JFC-000/10:05:39.333
End	JFC-CDS 00000588:00:0	96-352/16:57:46.733	JFC-000/09:54:32.000
Duration	00000011:00:0	000/00:11:07.333	000/00:11:07.333

Top Label	E4JUFTKR1E14-				
Bottom Label	realtime				
Plot Key	UVS	**Type**	SCI		
CDS Bytes	64	**Report Options**	BOTH	**Scan Platform**	Yes
CDS Source	OAP	**Spin State**	DUAL	**DMS**	No

Observation Objective

AWG hot spot (6.5/337 lat/lon) feature track (JFC epoch), rotation 1, solar phase angle 55 deg, emission angle 1, independent UVS observation.

Realtime observation; G/G mini scan off hot spot set up by observations preceeding this one. Distance from Jupiter = 21 Rj.

Last cn/ck = 133/89.

Design Detail

```
PSID   CDS  RIM  COMMAND  PARAMETERS
384AI   00   00  COMMNT UVS RIM 0
165AC   36   01  TARGET Lat/lon=6.5/331; cone_off=11.0 mrad (RA/Dec=239.06/-22.12)
349KQ   28   09+UVFLSH PACKET,UVS (8)
```

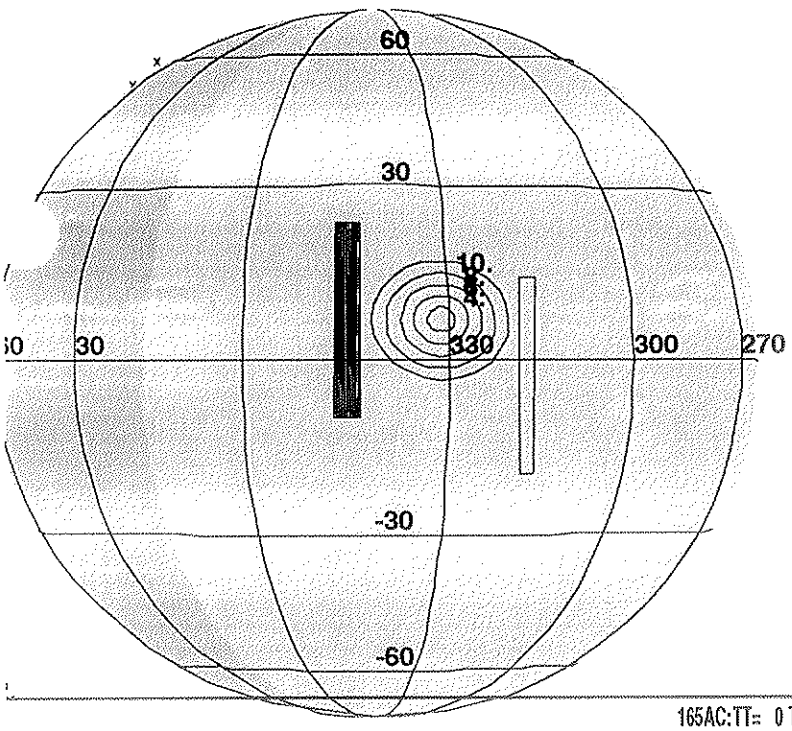

165AC:TT= 0 TMC= 1 C= 11.00 XC= 0.00 BS= 0/6968 TC= 1(6.5 331)
A= 182 pD= 182 SR=17.450 RA50=239.13 DEC50=-22.11 cone=134.23 clock= 89.54

ESIGN G2.0 kent :10/22/1996 0:24:40

ILE:P.E4JUFTKR1E14

ENTRAL BODY:JUPITER III

INI:m.E4JUFTKR1E14

/C EPH:/DATA/NAVIO/T-960909-TOUR.NS

. APSIS: THINNING: :UVS 1

TART:JFC 96-353/02:52:18.733 -CDS 598:00:0 BODY PLOT TIME:TARGET-TIME D= 182 S= 1.000

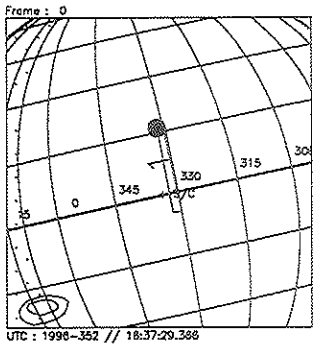

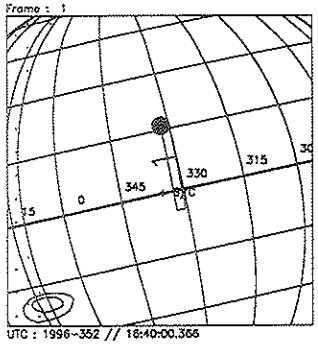

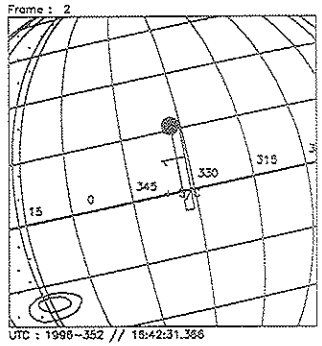

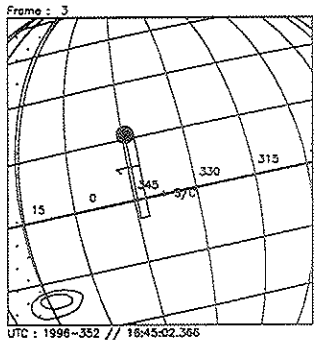

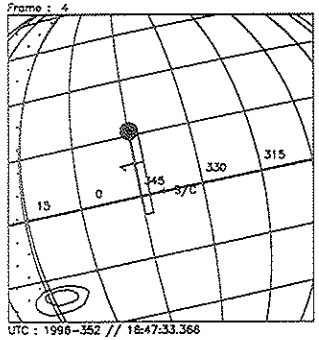

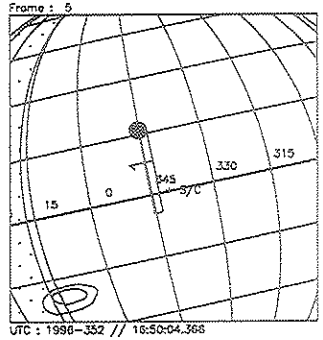

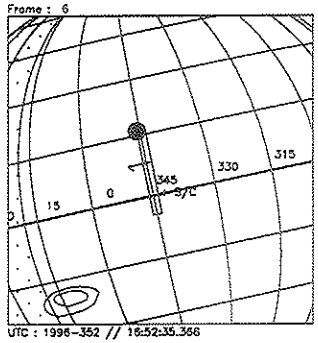

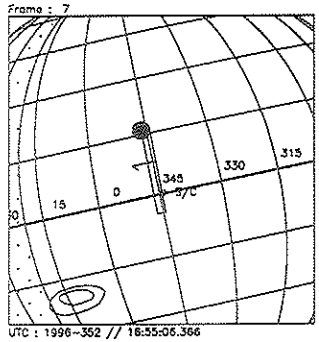

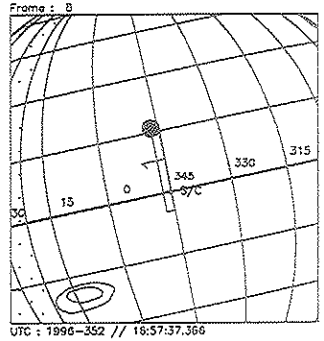

Start UTC_TIME : 1996-352 // 16:37:29.366
End UTC_TIME : 1996-352 // 16:57:42.698
Start SCLK : 1/03744594:00:0:0
Delta Time between FOV : 151.0000
FOVs : N/G Channel(0.5x0.5)

Target Body : JUPITER
Target Ra/Dec : 238.69/-22.33 Deg
S/C to Body Center : 1510069. Km (21.122204 Rj)
Z-axis Pointing (Ra / Dec) : 109.00 / 23.40 Deg

Activity ID: Orbit E4 OAPEL JUFTKR1E SeqNo 21-

Title HOT SPOT FEATURE TRACK **Instrument** UVS

Requestor UVS-AWG/W. KENT TOBISKA **Team** UVS **Working Group** AWG

Time System CDS **Load ID** E4A **Calendar Date** 12/17/96 **Week** 51

Start	JFC-CDS 00000570:00:0	96-352/17:15:58.733	JFC-000/09:36:20.000
End	JFC-CDS 00000562:00:0	96-352/17:24:04.067	JFC-000/09:28:14.666
Duration	00000008:00:0	000/00:08:05.334	000/00:08:05.334

Top Label E4JUFTKR1E21-

Bottom Label realtime

Plot Key	UVS	**Type**	SCI		
CDS Bytes	243	**Report Options**	BOTH	**Scan Platform**	No
CDS Source	OAP	**Spin State**	DUAL	**DMS**	No

Observation Objective

AWG hot spot (6.5/337 lat/lon) feature track (JFC epoch), rotation 1, solar phase angle 55 deg, emission angle 2, follows 4 color SSI (E4JSHOTSPT02) 1x4.

Realtime observation; full F/F scan for two observations and 176 step G/G miniscan covering 1496-1755 A hydrocarbons for two observations. Distance from Jupiter = 20 Rj.

Last cn/ck = TBD.

(4)	(3)	(2)	(1)	SSI
6.5/344	6.5/335	6.5/326	6.5/316	

(1)	(2)	(3)	UVS
6.5/344	6.4/338	6.4/331	

Design Detail

```
PSID   CDS RIM COMMAND PARAMETERS
384AJ   00   00 COMMNT UVS RIM 0
165ID   00 -03 TARGET Lat/lon = 6.5/331 (RA/Dec = 142.22/-28.92)
118ID   00 -03 SMOS    (starting RA/Dec = 237.58/-21.83)
349KR   28 -02+UVFLSH DISCRD,UVS
157AH   94 -01 CMDRS   PLAN_DUR = 41 RIMS; EST_UVS_CMDS = 6
           00       1
34UVS/UVF:07,SCAN,NORM,NORM,NORM,SAME,0,ON,OFF,OFF,ON,OFF,NOOVR,1,00,9C,00,00
           06       7
34UVS/OFF:C1,FIXED,NORM,NORM,NORM,SAME,0,OFF,OFF,ON,OFF,OFF,NOOVR,1,2C,05,00,00
           10      11
34UVS/UVF:07,SCAN,NORM,NORM,NORM,SAME,0,ON,OFF,OFF,ON,OFF,NOOVR,1,00,9C,00,00
           16      17
34UVS/OFF:C1,FIXED,NORM,NORM,NORM,SAME,0,OFF,OFF,ON,OFF,OFF,NOOVR,1,2C,05,00,00
           19      20
34UVS/UVG:E3,FIXED,NORM,NORM,NORM,SAME,0,OFF,OFF,ON,ON,OFF,NOOVR,1,1A,8E,00,00
           39      40
34UVS/OFF:C1,FIXED,NORM,NORM,NORM,SAME,0,OFF,OFF,ON,OFF,OFF,NOOVR,1,2C,05,00,00
117AF  37   00 CSMOS  3 repositions; 1 subcsmos (-5.7 mrad cone_del_R)
349KS  28   00+UVFLSH PACKET,UVS (1)
349KT  28   02+UVFLSH PACKET,UVS (2)
```

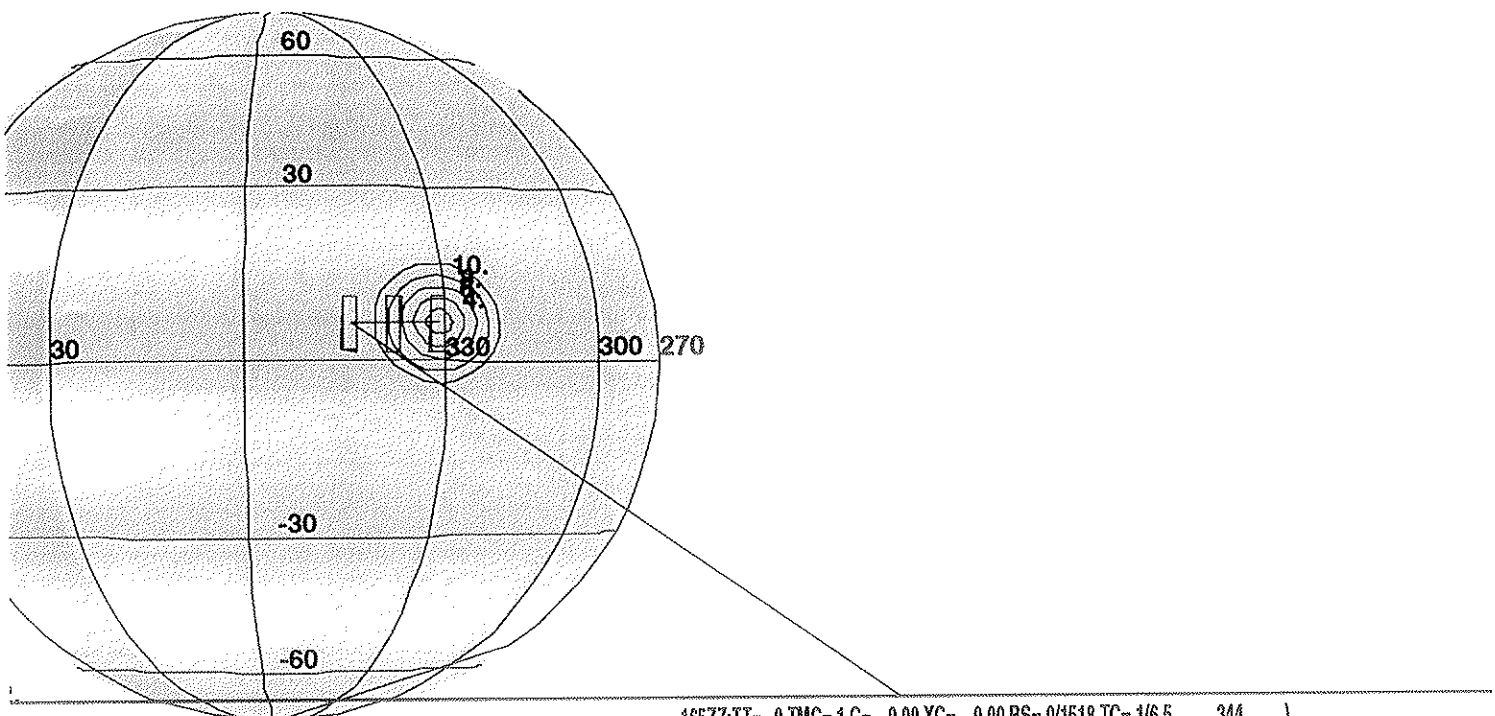

165ZZ:TT= 0 TMC= 1 C= 0.00 XC= 0.00 BS= 0/1518 TC= 1(6.5 344)
A= 182 pD= 182 SR=17.450 RA50=238.87 DEC50=-22.05 cone=133.98 clock= 89.55
117AF:#SB= 1 OR= 1.000 RR=12.000 BM=F RC= 1 BS= 0/2064
1:#s= 3 Cs= 0.00 XCs= 0.00 Cr= -5.70 XCr= 0.00 sD= 272 rD= 92

ESIGN G2.0 kent :10/31/1996 13:51:24

ILE:P.E4JUFTKR1E21

ENTRAL BODY:JUPITER III

INI:m.E4JUFTKR1E21

'^ :PH:/DATA/NAVIO/T-960909-TOUR.NS

_ .APSIS: THINNING: :UVS 1

TART:JFC 96-353/02:52:18.733 -CDS 573:00:0 BODY PLOT TIME:TARGET-TIME D= 182 S= 1.000

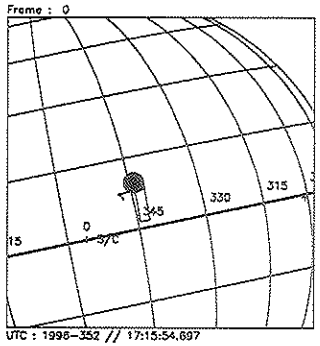

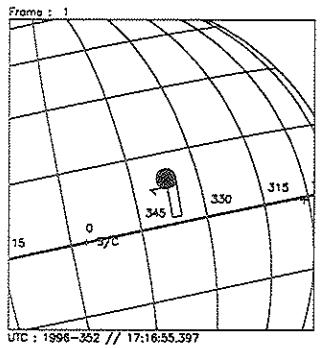

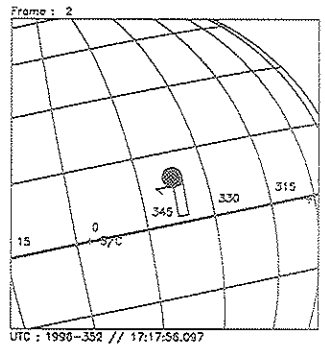

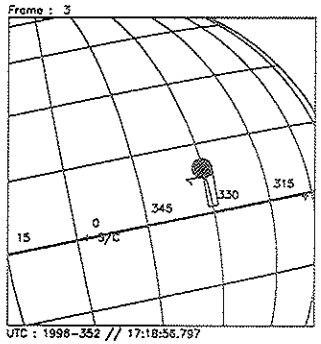

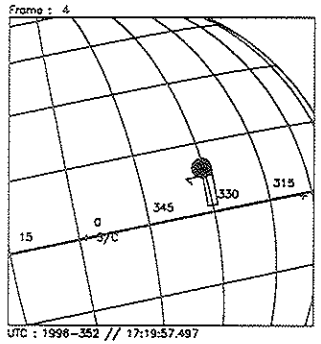

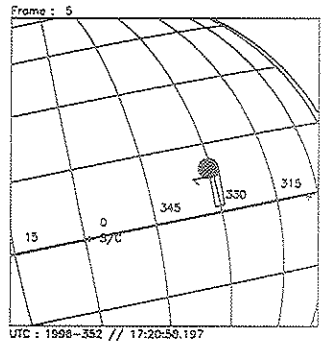

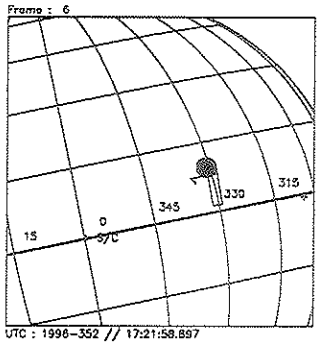

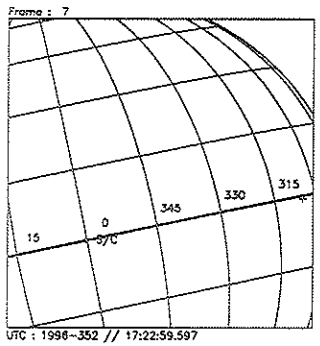

Start UTC_TIME : 1996-352 // 17:15:54.697
End UTC_TIME : 1996-352 // 17:24:00.031
Start SCLK : 1/03744632:00:0:0
Delta Time between FOV : 60.70000
FOVs : F Channel(0.1x0.4)

Target Body : JUPITER
Target Cone/Clock : 134.60/ 89.13 Deg
S/C to Body Center : 1491343. Km (20.860277 Rj)
Z-axis Pointing (Ra / Dec) : 109.00 / 23.40 Deg

Activity ID: Orbit E4 **OAPEL** JUFTKR1E **SeqNo** 22-

Title HOT SPOT FEATURE TRACK **Instrument** UVS

Requestor UVS-AWG/W. KENT TOBISKA **Team** UVS **Working Group** AWG

Time System CDS **Load ID** E4A **Calendar Date** 12/17/96 **Week** 51

Start	JFC-CDS 00000560:00:0	96-352/17:26:05.400	JFC-000/09:26:13.333
End	JFC-CDS 00000554:00:0	96-352/17:32:09.400	JFC-000/09:20:09.333
Duration	00000006:00:0	000/00:06:04.000	000/00:06:04.000

Top Label E4JUFTKR1E22-

Bottom Label realtime

Plot Key UVS **Type** SCI

CDS Bytes 121 **Report Options** BOTH **Scan Platform** No

CDS Source OAP **Spin State** DUAL **DMS** No

Observation Objective

AWG hot spot (6.5/337 lat/lon) feature track (JFC epoch), rotation 1, solar phase angle 55 deg, emission angle 2, follows 2 color SSI (E4JSHOTSPS02) 1x3.

Realtime observation; full F/F scan for two observations and 176 step G/G miniscan covering 1496-1755 A hydrocarbons for two observations. Distance from Jupiter = 20 Rj.

Last cn/ck = TBD.

(3)	(2)	(1)	SSI
16/339	16/330	16/319	

(1)	(2)	(3)	UVS
16/339	16/329	16/317	

Design Detail

```
PSID   CDS RIM COMMAND PARAMETERS
384AK   00   00 COMMNT UVS RIM 0
165IE   00 -02 TARGET Lat/lon = 16/319 (RA/Dec = 115.41/-6.61)
118IE   00 -02 SMOS    (starting RA/Dec = 237.98/-21.48)
117AG   37   00 CSMOS   3 repositions; 1 subcsmos (-7.4 mrad cone_del_R)
349KW   28   00+UVFLSH PACKET,UVS (4)
349KX   28   02+UVFLSH PACKET,UVS (5)
349KY   28   04+UVFLSH PACKET,UVS (6)
```

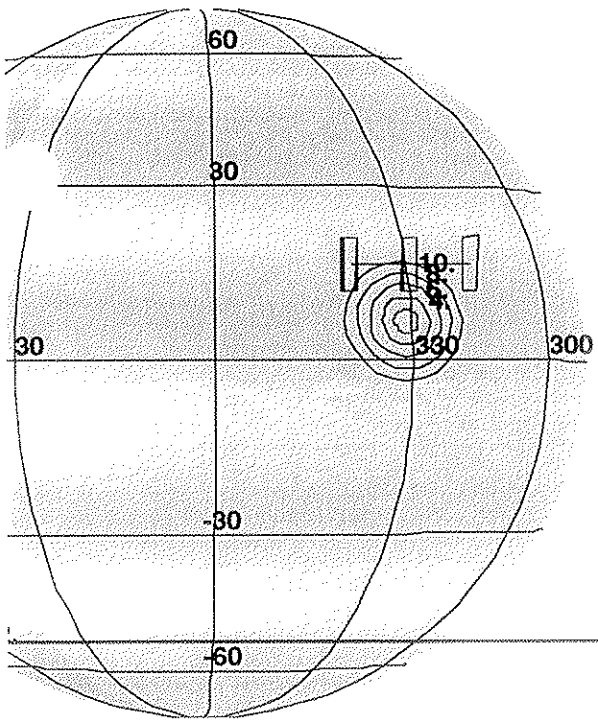

165ZZ:TT= 0 TMC= 1 C= 0.00 XC= 0.00 BS= 0/3520 TC= 1(16 339)
A= 182 pD= 182 SR=17.450 RA50=238.64 DEC50=-21.59 cone=133.67 clock= 90.12
117AG:#SB= 1 OR= 1.000 RR=12.000 BM=F RC= 1 BS= 0/3084
1:#s= 3 Cs= 0.00 XCs= 0.00 Cr= -7.40 XCr= 0.00 sD= 272 rD= 92

ESIGN G2.0 kent :10/22/1996 0:42:19

ILE:P.E4JUFTKR1E22

ENTRAL BODY:JUPITER III

INI:m.E4JUFTKR1E22

'' ''PH:/DATA/NAVIO/T-960909-TOUR.NS

.. .APSIS: THINNING: :UVS 1

TART:JFC 96-353/02:52:18.733 -CDS 562:00:0 BODY PLOT TIME:TARGET-TIME D= 182 S= 1.000

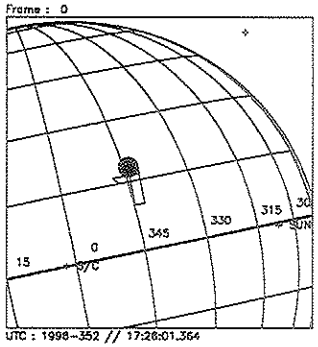

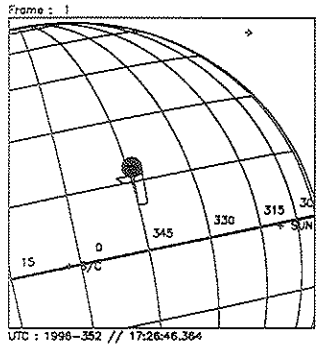

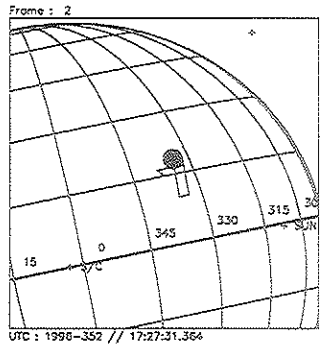

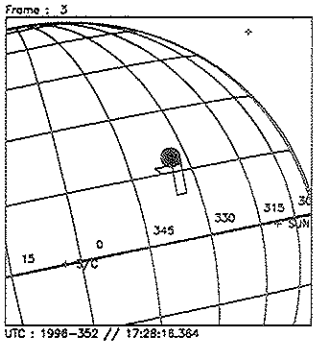

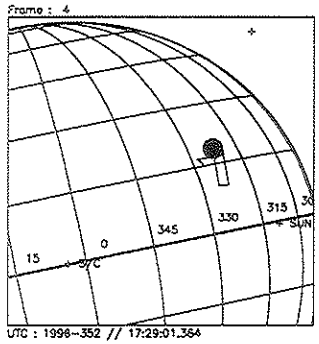

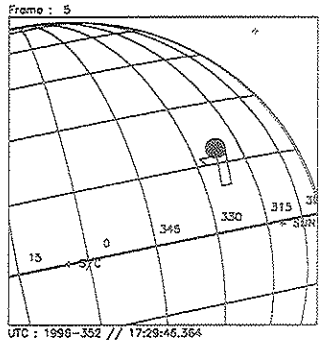

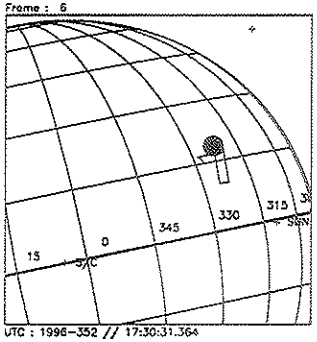

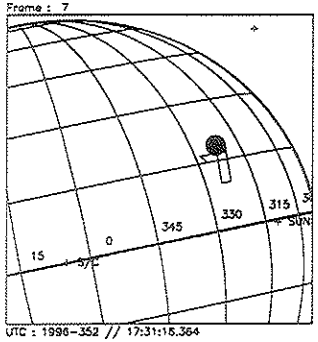

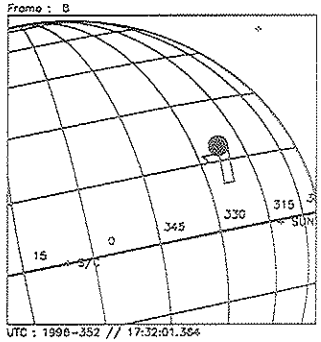

Start UTC_TIME : 1996-352 // 17:26:01.364
End UTC_TIME : 1996-352 // 17:32:05.364
Start SCLK : 1/03744642:00:0:0
Delta Time between FOV : 45.00000
FOVs : F Channel(0.1x0.4)

Target Body : JUPITER
Target Cone/Clock : 134.79/ 89.13 Deg
S/C to Body Center : 1486405. Km (20.791206 Rj)
Z-axis Pointing (Ra / Dec) : 109.00 / 23.40 Deg

Activity ID: Orbit E4 OAPEL JUFTKR1E SeqNo 23-

Title HOT SPOT FEATURE TRACK **Instrument** UVS

Requestor UVS-AWG/W. KENT TOBISKA **Team** UVS **Working Group** AWG

Time System CDS **Load ID** E4A **Calendar Date** 12/17/96 Week 51

Start	JFC-CDS 00000551:00:0	96-352/17:35:11.400	JFC-000/09:17:07.333
End	JFC-CDS 00000542:00:0	96-352/17:44:17.400	JFC-000/09:08:01.333
Duration	00000009:00:0	000/00:09:06.000	000/00:09:06.000

Top Label E4JUFTKR1E23-

Bottom Label realtime

Plot Key	UVS	**Type**	SCI		
CDS Bytes	64	**Report Options**	BOTH	**Scan Platform**	No
CDS Source	OAP	**Spin State**	DUAL	**DMS**	No

Observation Objective

AWG hot spot (6.5/337 lat/lon) feature track (JFC epoch), rotation 1, solar phase angle 55 deg, emission angle 2, independent UVS observation.

Realtime observation; G/G mini scan on hot spot set up by observations preceeding this one. Distance from Jupiter = 20 Rj.

Last cn/ck = TBD.

Design Detail

```
PSID   CDS RIM COMMAND PARAMETERS
384AL   00   00 COMMNT UVS RIM 0
165AO   36   01 TARGET Lat/lon = 6.5/331 (RA/Dec = 238.01/-21.91)
349KZ   28   08+UVFLSH PACKET,UVS (7)
```

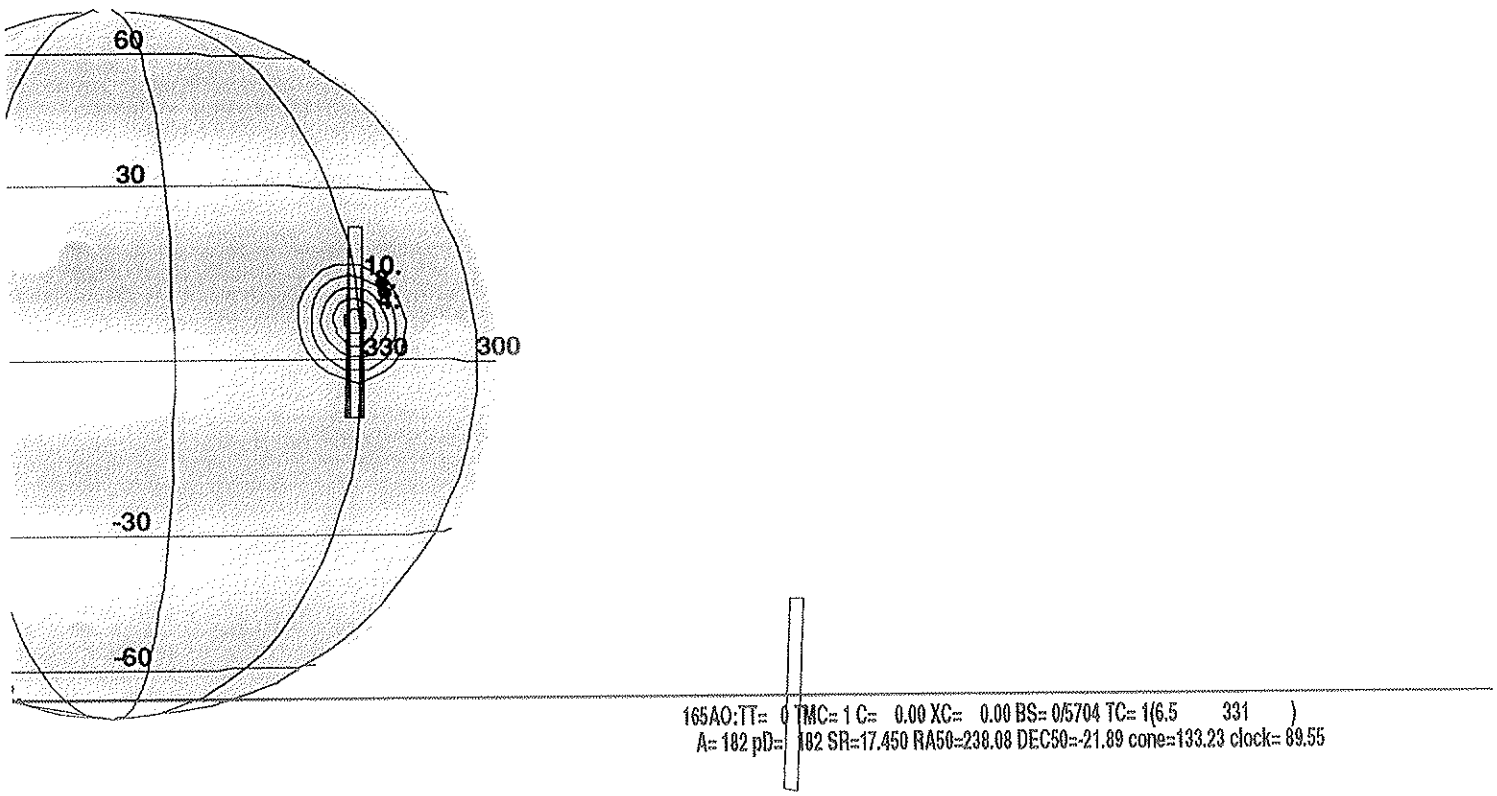

ESIGN G2.0 kent :10/22/1996 0:45:45

ILE:P.E4JUFTKR1E23

ENTRAL BODY:JUPITER III

INI:m.E4JUFTKR1E23

/C EPH:/DATA/NAVIO/T-960909-TOUR.NS

. .APSIS: THINNING: :UVS 1

TART:JFC 96-353/02:52:18.733 -CDS 550:00:0 BODY PLOT TIME:TARGET-TIME D= 182 S= 1.000

Activity ID:	**Orbit** E4	**OAPEL** JUFTKR1E		**SeqNo** 24-	
Title	HOT SPOT FEATURE TRACK			**Instrument**	UVS
Requestor	UVS-AWG/W. KENT TOBISKA	**Team** UVS		**Working Group**	AWG

Time System	CDS	**Load ID** E4A	**Calendar Date**	12/17/96	**Week** 51
Start	JFC-CDS 00000542:00:0	96-352/17:44:17.400	JFC-000/09:08:01.333		
End	JFC-CDS 00000531:00:0	96-352/17:55:24.733	JFC-000/08:56:54.000		
Duration	00000011:00:0	000/00:11:07.333	000/00:11:07.333		

Top Label	E4JUFTKR1E24-				
Bottom Label	realtime				
Plot Key	UVS	**Type**	SCI		
CDS Bytes	64	**Report Options**	BOTH	**Scan Platform**	Yes
CDS Source	OAP	**Spin State**	DUAL	**DMS**	No

Observation Objective

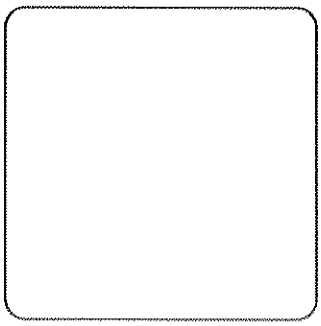

AWG hot spot (6.5/337 lat/lon) feature track (JFC epoch), rotation 1, solar phase angle 55 deg, emission angle 2, independent UVS observation.

Realtime observation; G/G mini scan off hot spot set up by observations preceeding this one. Distance from Jupiter = 20 Rj.

Last cn/ck = 133/89.

Design Detail

```
PSID   CDS RIM COMMAND PARAMETERS
384AM   00   00 COMMNT UVS RIM 0
165AD   36   01 TARGET Lat/lon=6.5/331; cone_off=9.0 mrad (RA/Dec=238.52/-22.01)
349LD   28   09+UVFLSH PACKET,UVS (8)
```

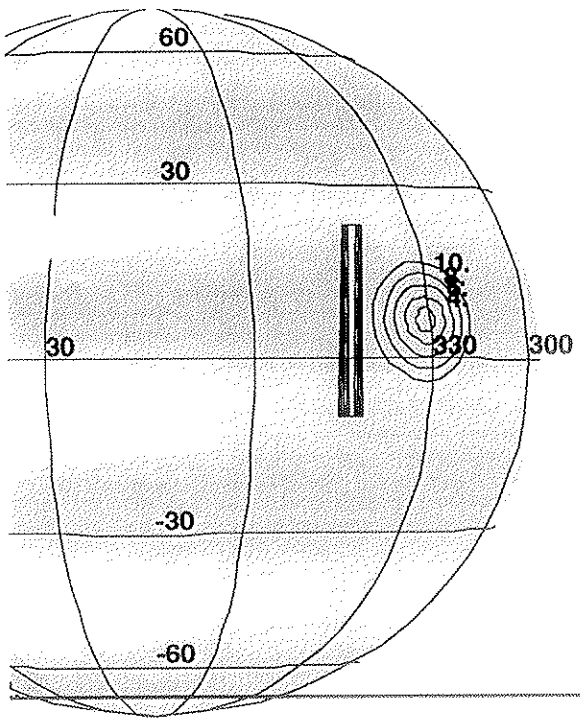

165AD:TT= 0 TMC=1 C= 9.00 XC= 0.00 BS=0/7342 TC=1(6.5 331)
A= 70 pD= 182 SR=17.450 RA50=238.59 DEC50=-21.99 cone=133.72 clock= 89.55

ESIGN G2.0 kent :10/22/1996 0:53:12

ILE:P.E4JUFTKR1E24

ENTRAL BODY:JUPITER III

INI:m.E4JUFTKR1E24

/C "PH:/DATA/NAVIO/T-960909-TOUR.NS

. .APSIS: THINNING: :UVS 1

TART:JFC 96-353/02:52:18.733 -CDS 541:00:0 BODY PLOT TIME:TARGET-TIME D= 182 S= 1.000

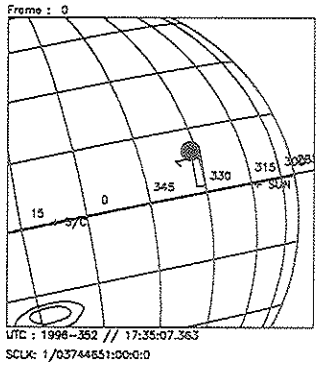

UTC : 1996-352 // 17:35:07.363
SCLK: 1/03744651:00:0:0

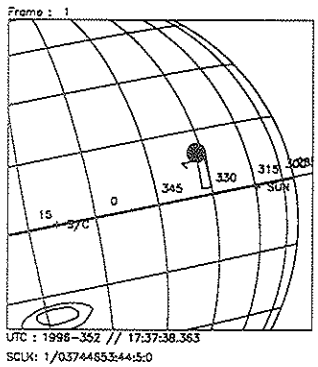

UTC : 1996-352 // 17:37:38.363
SCLK: 1/03744653:44:5:0

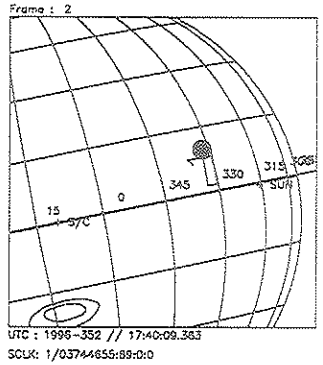

UTC : 1996-352 // 17:40:09.363
SCLK: 1/03744655:89:0:0

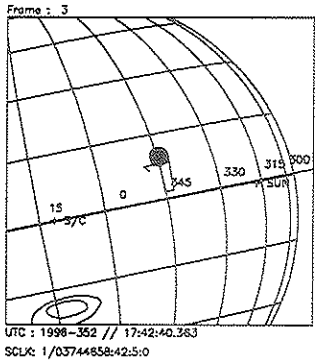

UTC : 1996-352 // 17:42:40.363
SCLK: 1/03744658:42:5:0

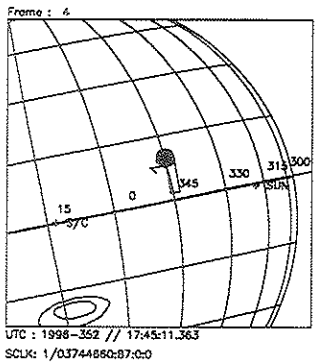

UTC : 1996-352 // 17:45:11.363
SCLK: 1/03744660:87:0:0

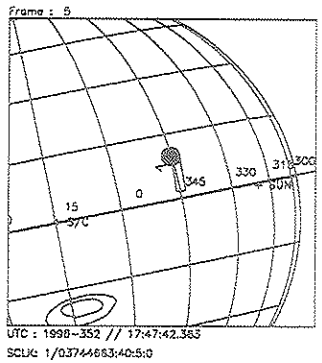

UTC : 1996-352 // 17:47:42.363
SCLK: 1/03744663:40:5:0

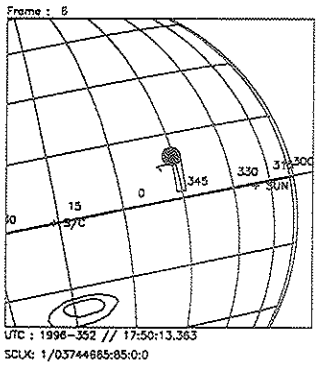

UTC : 1996-352 // 17:50:13.363
SCLK: 1/03744665:85:0:0

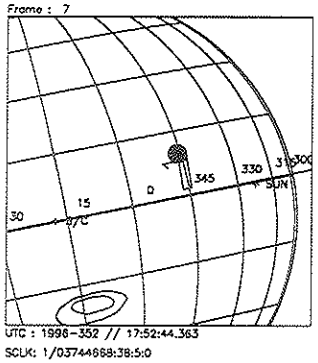

UTC : 1996-352 // 17:52:44.363
SCLK: 1/03744668:38:5:0

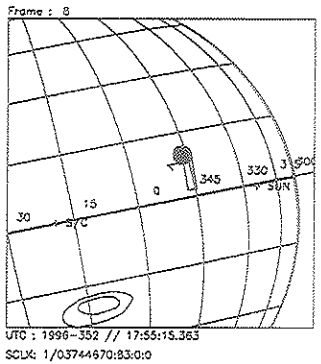

UTC : 1996-352 // 17:55:15.363
SCLK: 1/03744670:83:0:0

Start UTC_TIME : 1996-352 // 17:35:07.363
End UTC_TIME : 1996-352 // 17:55:20.696
Start SCLK : 1/03744651:00:0:0
Delta Time between FOV : 151.0000
FOVs : F Channel(0.1x0.4)

Target Body : JUPITER
Target Cone/Clock : 134.96/ 89.13 Deg
S/C to Body Center : 1481957. Km (20.728991 Rj)
Z-axis Pointing (Ra / Dec) : 109.00 / 23.40 Deg

Activity ID: Orbit E4 **OAPEL** JUFTKR1E **SeqNo** 31-

Title HOT SPOT FEATURE TRACK **Instrument** UVS

Requestor UVS-AWG/W. KENT TOBISKA **Team** UVS **Working Group** AWG

Time System CDS **Load ID** E4A **Calendar Date** 12/17/96 **Week** 51

Start	JFC-CDS 00000525:00:0	96-352/18:01:28.733	JFC-000/08:50:50.000
End	JFC-CDS 00000515:00:0	96-352/18:11:35.400	JFC-000/08:40:43.333
Duration	00000010:00:0	000/00:10:06.667	000/00:10:06.667

Top Label E4JUFTKR1E31-

Bottom Label realtime

Plot Key	UVS	**Type**	SCI		
CDS Bytes	237	**Report Options**	BOTH	**Scan Platform**	No
CDS Source	OAP	**Spin State**	DUAL	**DMS**	No

Observation Objective

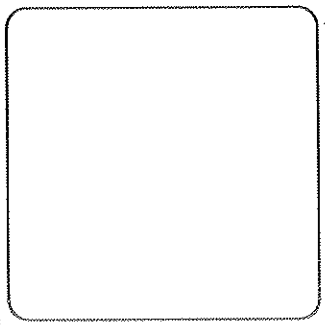

AWG hot spot (6.5/337 lat/lon) feature track (JFC epoch), rotation 1, solar phase angle 55 deg, emission angle 3, preceeds 4 color SSI (E4JSHOTSPT03) 1x3.

Realtime observation; full F/F scan for two observations and 176 step G/G miniscan covering 1496-1755 A hydrocarbons for two observations. Distance from Jupiter = 20 Rj.

Last cn/ck = TBD.

(3)	(2)	(1)	SSI
6.3/01.6	6.4/350	6.5/331	

(3)	(2)	(1)	UVS
6.3/350	6.3/341	6.3/331	

Design Detail

```
PSID   CDS RIM COMMAND PARAMETERS
384AN   00   00 COMMNT UVS RIM 0
349LE   28   02+UVFLSH DISCRD,UVS
157AI   52   03 CMDRS  PLAN_DUR = 23 RIMS; EST_UVS_CMDS = 3
             04      1
34UVS/UVF:07,SCAN,NORM,NORM,NORM,SAME,0,ON,OFF,OFF,ON,OFF,NOOVR,1,00,9C,00,00
             14      11
34UVS/UVG:E3,FIXED,NORM,NORM,NORM,SAME,0,OFF,OFF,ON,ON,OFF,NOOVR,1,1A,8E,00,00
             25      22
34UVS/OFF:C1,FIXED,NORM,NORM,NORM,SAME,0,OFF,OFF,ON,OFF,OFF,NOOVR,1,2C,05,00,00
165AW   36   04 TARGET Lat/lon = 6.3/350 (RA/Dec = 238.66/-22.04)
117AI   37   04 CSMOS  3 repositions; 1 subcsmos (-5.5 mrad cone_del_R)
349LF   28   04+UVFLSH PACKET,UVS (1)
349LG   28   06+UVFLSH PACKET,UVS (2)
349LH   28   08+UVFLSH PACKET,UVS (3)
```

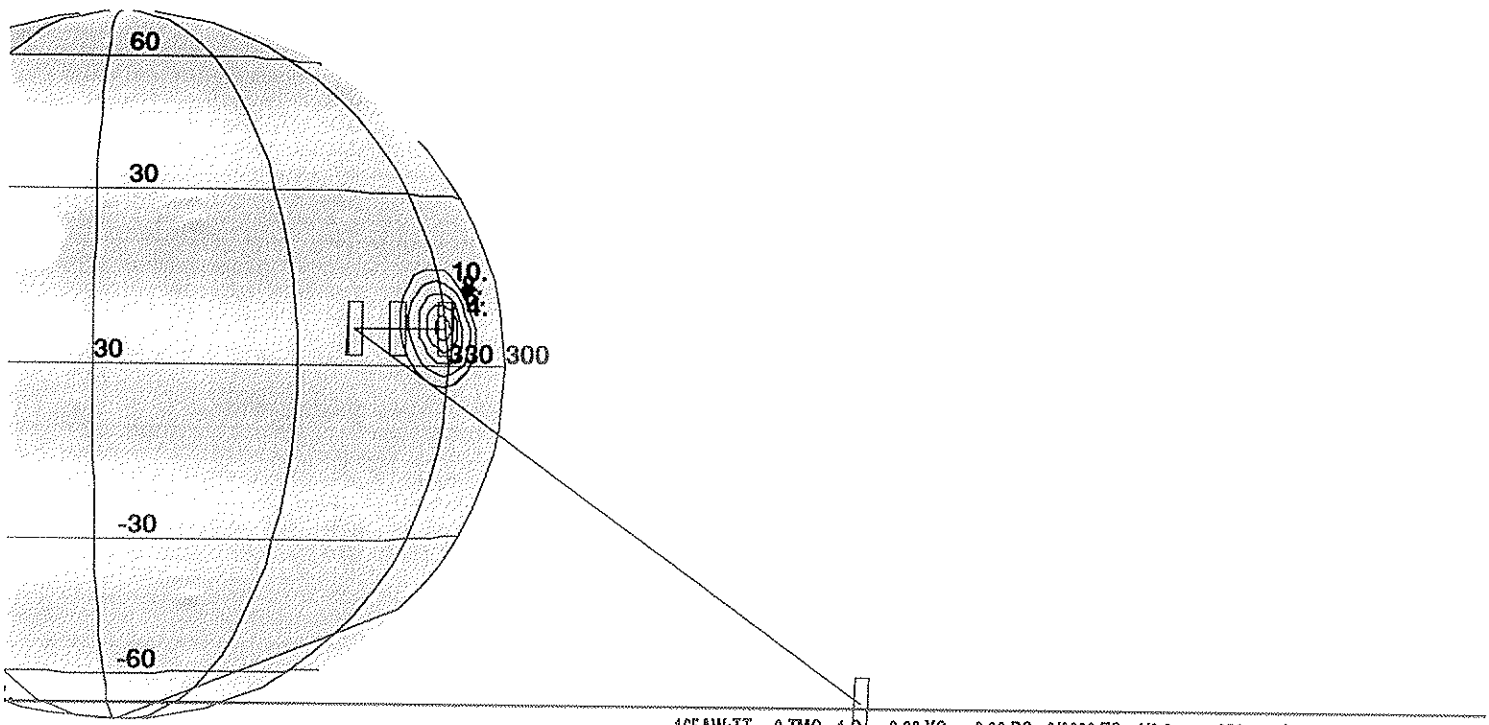

165AW:TT= 0 TMC= 1 C= 0.00 XC= 0.00 BS= 0/0982 TC= 1(6.3 350)
A= 728 pD= 182 SR=17.450 RA50=238.73 DEC50=-22.03 cone=133.85 clock= 89.55
117AI:#SB= 1 OR= 1.000 RR=12.000 BM=F RC= 1 BS= 0/0982
1:#s= 3 Cs= 0.00 XCs= 0.00 Cr= -5.50 XCr= 0.00 sD= 272 rD= 92

ESIGN G2.0 kent :10/22/1996 1: 8:43

LE:P.E4JUFTKR1E31

ENTRAL BODY:JUPITER III

INI:m.E4JUFTKR1E31

PH:/DATA/NAVIO/T-960909-TOUR.NS

..APSIS: THINNING: :UVS 1

TART:JFC 96-353/02:52:18.733 -CDS 521:00:0 BODY PLOT TIME:TARGET-TIME D= 182 S= 1.000

Activity ID: Orbit E4 **OAPEL** JUFTKR1E **SeqNo** 32-

Title HOT SPOT FEATURE TRACK **Instrument** UVS

Requestor UVS-AWG/W. KENT TOBISKA **Team** UVS **Working Group** AWG

Time System CDS **Load ID** E4A **Calendar Date** 12/17/96 **Week** 51

Start	JFC-CDS 00000515:00:0	96-352/18:11:35.400	JFC-000/08:40:43.333
End	JFC-CDS 00000511:00:0	96-352/18:15:38.067	JFC-000/08:36:40.666
Duration	00000004:00:0	000/00:04:02.667	000/00:04:02.667

Top Label E4JUFTKR1E32-

Bottom Label realtime

Plot Key	UVS	**Type**	SCI		
CDS Bytes	129	**Report Options**	BOTH	**Scan Platform**	No
CDS Source	OAP	**Spin State**	DUAL	**DMS**	No

Observation Objective

AWG hot spot (6.5/337 lat/lon) feature track (JFC epoch), rotation 1, solar phase angle 55 deg, emission angle 3, preceeds 2 color SSI (E4JSHOTSPS03) 1x2.

Realtime observation; full F/F scan for two observations and 176 step G/G miniscan covering 1496-1755 A hydrocarbons for two observations. Distance from Jupiter = 20 Rj.

Last cn/ck = TBD.

	(2)	(1)	
SSI	16/351	16/331	
UVS	16/351	16/331	

Design Detail

PSID	CDS	RIM	COMMAND PARAMETERS
384AO	00	00	COMMNT UVS RIM 0
165AF	36	00	TARGET Lat/lon = 16/331 (RA/Dec = 238.19/-21.53)
117AJ	37	00	CSMOS 2 repositions; 1 subcsmos (11.0 mrad cone_del_R)
349LI	28	00	+UVFLSH PACKET,UVS (4)
349LJ	28	02	+UVFLSH PACKET,UVS (5)

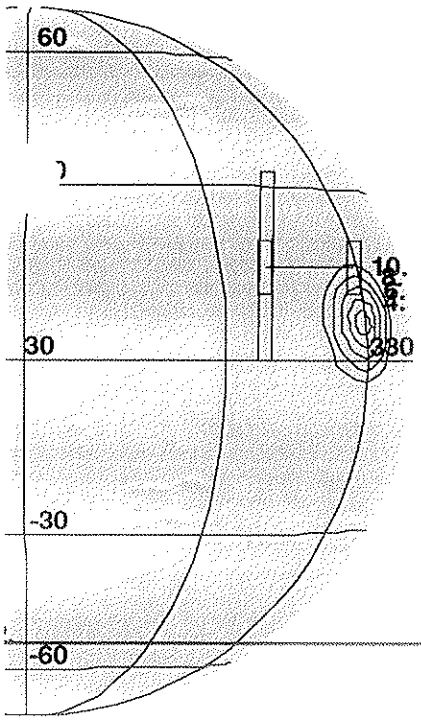

165AF:TT= 0 TMC= 1 C= 0.00 XC= 0.00 BS= 0/2074 TC= 1(16 331)
A= 70 pD= 182 SR=17.450 RA50=238.26 DEC50=-21.51 cone=133.31 clock= 90.12
117AJ:#SB= 1 OR= 1.000 RR=12.000 BM=F RC= 1 BS= 0/2074
1:#s= 2 Cs= 0.00 XCs= 0.00 Cr= 11.00 XCr= 0.00 sD= 272 rD= 92

ESIGN G2.0 kent :10/22/1996 1:34: 2

ILE:P.E4JUFTKR1E32

ENTRAL BODY:JUPITER III

INI:m.E4JUFTKR1E32

/C :PH:/DATA/NAVIO/T-960909-TOUR.NS

. .APSIS: THINNING: :UVS 1

TART:JFC 96-353/02:52:18.733 -CDS 515:00:0 BODY PLOT TIME:TARGET-TIME D= 182 S= 1.000

Activity ID:	Orbit E4	OAPEL JUFTKR1E		**SeqNo**	33-
Title	HOT SPOT FEATURE TRACK			**Instrument**	UVS
Requestor	UVS-AWG/W. KENT TOBISKA	**Team**	UVS	**Working Group**	AWG

Time System	CDS	**Load ID**	E4A	**Calendar Date** 12/17/96 Week 51
Start	JFC-CDS 00000511:00:0	96-352/18:15:38.067	JFC-000/08:36:40.666	
End	JFC-CDS 00000506:00:0	96-352/18:20:41.400	JFC-000/08:31:37.333	
Duration	00000005:00:0	000/00:05:03.333	000/00:05:03.333	

Top Label	E4JUFTKR1E33-				
Bottom Label	realtime				
Plot Key	UVS	**Type**	SCI		
CDS Bytes	64	**Report Options**	BOTH	**Scan Platform**	No
CDS Source	OAP	**Spin State**	DUAL	**DMS**	No

Observation Objective

AWG hot spot (6.5/337 lat/lon) feature track (JFC epoch), rotation 1, solar phase angle 55 deg, emission angle 3, independent UVS observation.

Realtime observation; G/G mini scan on hot spot set up by observations preceeding this one. Distance from Jupiter = 20 Rj.

Last cn/ck = TBD.

Design Detail

```
PSID   CDS RIM COMMAND PARAMETERS
384AP   00   00 COMMNT UVS RIM 0
165AP   36   00 TARGET Lat/lon = 6.5/331 (RA/Dec = 238.04/-21.91)
349LK   28   04+UVFLSH PACKET,UVS (6)
```

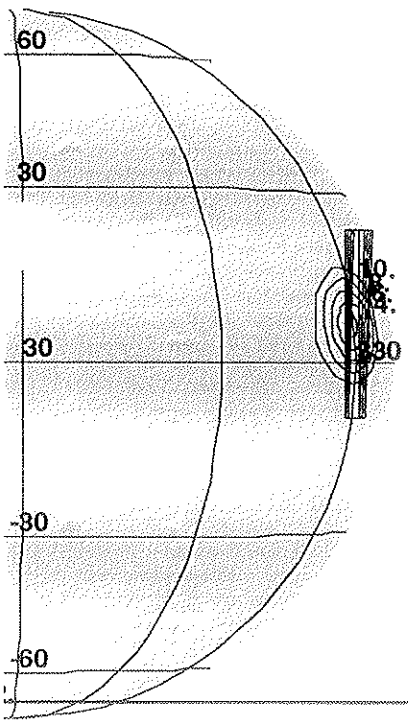

165AP:TT= 0 TMC= 1 C= 0.00 XC= 0.00 BS= 0/2802 TC= 1(6.5 331)
A= 90 pD= 182 SR=17.450 RA50=238.11 DEC50=-21.90 cone=133.26 clock= 89.55

ESIGN G2.0 kent :10/22/1996 1:36:55

ILE:P.E4JUFTKR1E33

ENTRAL BODY:JUPITER III

INI:m.E4JUFTKR1E33

PH:/DATA/NAVIO/T-960909-TOUR.NS

APSIS: THINNING: :UVS 1

TART:JFC 96-353/02:52:18.733 -CDS 511:00:0 BODY PLOT TIME:TARGET-TIME D= 182 S= 1.000

Activity ID: Orbit E4 **OAPEL** JUFTKR1E **SeqNo** 34-

Title HOT SPOT FEATURE TRACK **Instrument** UVS

Requestor UVS-AWG/W. KENT TOBISKA **Team** UVS **Working Group** AWG

Time System CDS **Load ID** E4A **Calendar Date** 12/17/96 **Week** 51

Start	JFC-CDS 00000506:00:0	96-352/18:20:41.400	JFC-000/08:31:37.333
End	JFC-CDS 00000500:00:0	96-352/18:26:45.400	JFC-000/08:25:33.333
Duration	00000006:00:0	000/00:06:04.000	000/00:06:04.000

Top Label E4JUFTKR1E34-

Bottom Label realtime

Plot Key UVS **Type** SCI

CDS Bytes 64 **Report Options** BOTH **Scan Platform** Yes

CDS Source OAP **Spin State** DUAL **DMS** No

Observation Objective

AWG hot spot (6.5/337 lat/lon) feature track (JFC epoch), rotation 1, solar phase angle 55 deg, emission angle 3, independent UVS observation.

Realtime observation; G/G mini scan off hot spot set up by observations preceeding this one. Distance from Jupiter = 20 Rj.

Last cn/ck = 133/89.

Design Detail

```
PSID   CDS RIM COMMAND PARAMETERS
384AQ   00   00 COMMNT UVS RIM 0
165AE   36   01 TARGET Lat/lon=6.5/331; cone_off=9.0 mrad (RA/Dec=238.63/-22.03)
349LM   28   04+UVFLSH PACKET,UVS (7)
```

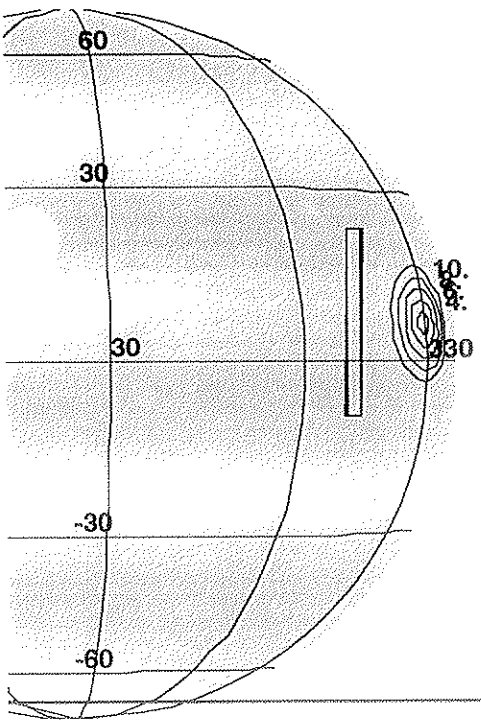

165AE:TT= 0 TMC= 1 C= 9.00 XC= 0.00 BS= 0/3894 TC= 1(6.5 331)
A= 70 pD= 182 SR=17.450 RA50=238.70 DEC50=-22.01 cone=133.81 clock= 89.55

ESIGN G2.0 kent :10/22/1996 1:46:59

ILE:P.E4JUFTKR1E34

ENTRAL BODY:JUPITER III

INI:m.E4JUFTKR1E34

/C EPH:/DATA/NAVIO/T-960909-TOUR.NS

. APSIS: THINNING: :UVS 1

TART:JFC 96-353/02:52:18.733 -CDS 505:00:0 BODY PLOT TIME:TARGET-TIME D= 182 S= 1.000

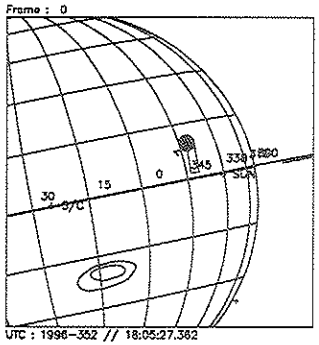

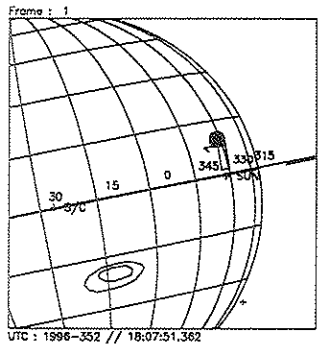

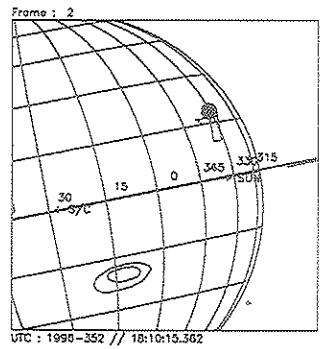

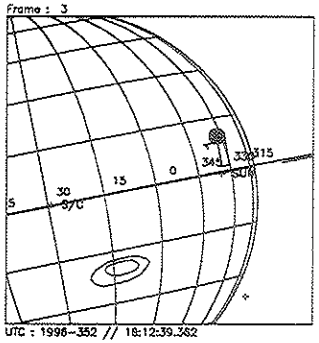

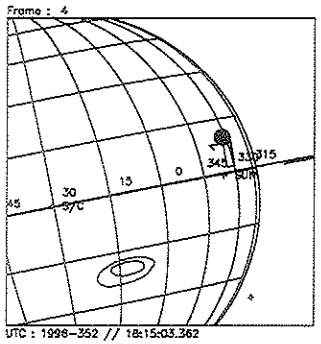

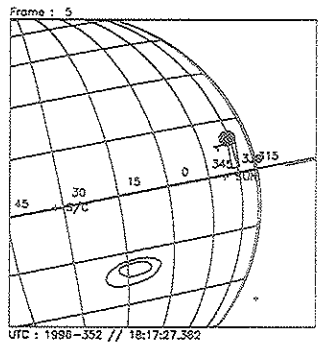

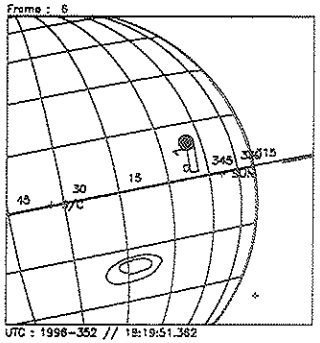

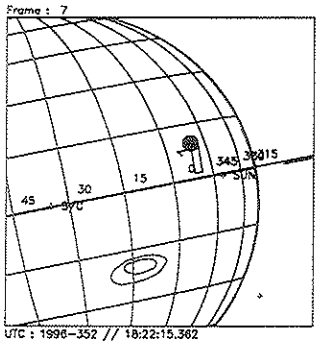

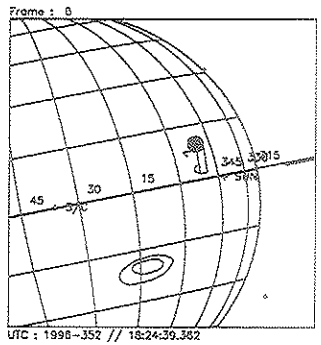

Start UTC_TIME : 1996-352 // 18:05:27.362
End UTC_TIME : 1996-352 // 18:26:41.362
Start SCLK : 1/03744681:00:0:0
Delta Time between FOV : 144.0000
FOVs : F Channel(0.1x0.4)

Target Body : JUPITER
Target Cone/Clock : 135.55/ 89.13 Deg
S/C to Body Center : 1467106. Km (20.521264 Rj)
Z-axis Pointing (Ra / Dec) : 109.00 / 23.40 Deg

Activity ID: Orbit E4 **OAPEL** JUFTKH1E **SeqNo** 11+

Title HOT SPOT FEATURE TRACK **Instrument** UVS

Requestor UVS-AWG/W. KENT TOBISKA **Team** UVS **Working Group** AWG

Time System CDS **Load ID** E4A **Calendar Date** 12/20/96 **Week** 51

Start	JHP+CDS 00003094:00:0	96-355/06:30:21.399	JHP+002/04:08:22.666
End	JHP+CDS 00003110:00:0	96-355/06:46:32.066	JHP+002/04:24:33.333
Duration	00000016:00:0	000/00:16:10.667	000/00:16:10.667

Top Label E4JUFTKH1E11+

Bottom Label realtime

Plot Key	UVS	**Type**	SCI		
CDS Bytes	136	**Report Options**	BOTH	**Scan Platform**	No
CDS Source	OAP	**Spin State**	DUAL	**DMS**	No

Observation Objective

AWG hot spot (4/304 lat/lon) feature track (JHP epoch), rotation 1, high solar phase angle 148 deg, emission angle 1, ridealong with 2 color SSI (E4JS148PHA03) 1x1.

Realtime observation; on crescent full F/F scan (1 RIM) and 176 step G/G miniscan covering 1496-1755 A hydrocarbons for two observations. Distance from Jupiter = 18 Rj. New s/c -Z axis is RA/Dec = 191.5/6.5

Last cn/ck = TBD.

Design Detail

```
PSID   CDS  RIM  COMMAND  PARAMETERS
384AS   00   00  COMMNT UVS RIM 0
349LN   28   02+UVFLSH  DISCRD,UVS
157AJ   52   03  CMDRS   PLAN_DUR = 14 RIMS;  EST_UVS_CMDS = 3
             04       1
34UVS/UVF:07,SCAN,NORM,NORM,NORM,SAME,0,ON,OFF,OFF,ON,OFF,NOOVR,1,00,9C,00,00
             06       3
34UVS/UVG:E3,FIXED,NORM,NORM,NORM,SAME,0,OFF,OFF,ON,ON,OFF,NOOVR,1,1A,8E,00,00
             16      13
34UVS/OFF:C1,FIXED,NORM,NORM,NORM,SAME,0,OFF,OFF,ON,OFF,OFF,NOOVR,1,2C,05,00,00
165JC   00   04  TARGET  Lat/lon = 4/298  (RA/Dec = 82.49/25.22)
349LO   28   04+UVFLSH  PACKET,UVS
349LP   28   15+UVFLSH  PACKET,UVS
```

Frame : 0

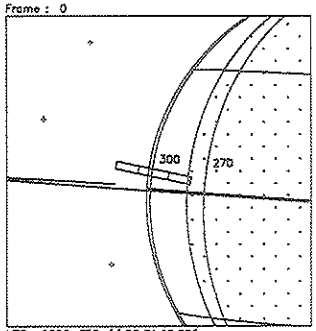

UTC : 1996-355 // 06:34:19.895
SCLK: 1/03748270:00:0:0

Frame : 1

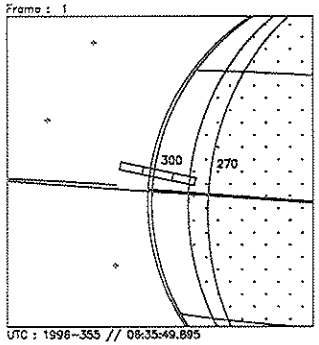

UTC : 1996-355 // 06:35:49.895
SCLK: 1/03748271:44:0:0

Frame : 2

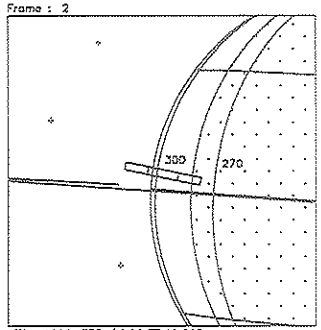

UTC : 1996-355 // 06:37:19.895
SCLK: 1/03748272:88:0:0

Frame : 3

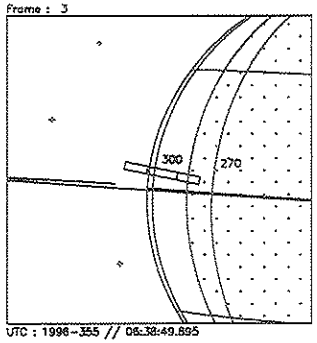

UTC : 1996-355 // 06:38:49.895
SCLK: 1/03748274:41:0:0

Frame : 4

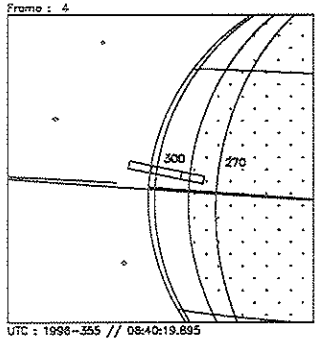

UTC : 1996-355 // 06:40:19.895
SCLK: 1/03748275:85:0:0

Frame : 5

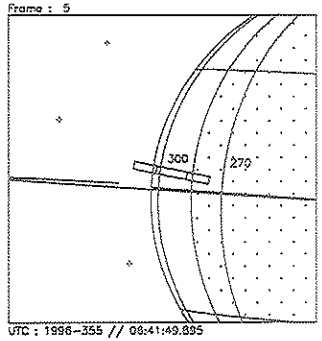

UTC : 1996-355 // 06:41:49.895
SCLK: 1/03748277:38:0:0

Frame : 6

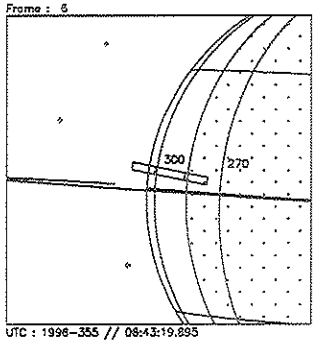

UTC : 1996-355 // 06:43:19.895
SCLK: 1/03748278:82:0:0

Frame : 7

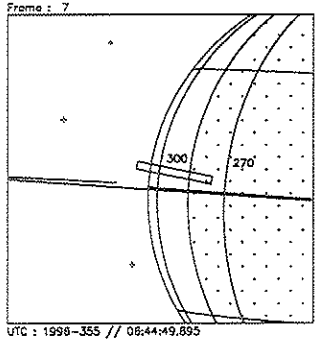

UTC : 1996-355 // 06:44:49.895
SCLK: 1/03748280:35:0:0

Frame : 8

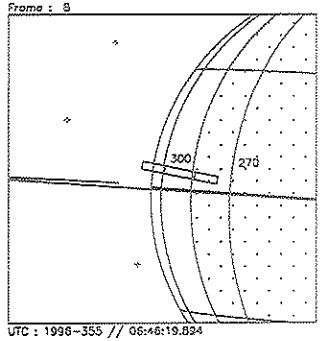

UTC : 1996-355 // 06:46:19.894
SCLK: 1/03748281:79:0:0

Start UTC_TIME : 1996-355 // 06:34:19.895
No End Time :
Start SCLK : 1/03748270:00:0:0

Target Body : JUPITER
Target Cone/Clock : 107.23/279.05 Deg
S/C to Body Center : 1280913. Km (17.916876 Rj)
Z-axis Pointing (Ra / Dec) : 191.50 / 6.50 Deg

Activity ID: Orbit E4 **OAPEL** JUFTKH1E **SeqNo** 12-

Title HOT SPOT FEATURE TRACK **Instrument** UVS

Requestor UVS-AWG/W. KENT TOBISKA **Team** UVS **Working Group** AWG

Time System CDS **Load ID** E4A **Calendar Date** 12/20/96 **Week** 51

Start	JHP+CDS 00003133:00:0	96-355/07:09:47.399	JHP+002/04:47:48.666
End	JHP+CDS 00003146:00:0	96-355/07:22:56.066	JHP+002/05:00:57.333
Duration	00000013:00:0	000/00:13:08.667	000/00:13:08.667

Top Label E4JUFTKH1E12-

Bottom Label realtime

Plot Key UVS **Type** SCI

CDS Bytes 172 **Report Options** BOTH **Scan Platform** Yes

CDS Source OAP **Spin State** DUAL **DMS** No

Observation Objective

AWG hot spot (4/304 lat/lon) feature track (JHP epoch), rotation 1, high solar phase angle 148 deg, emission angle 1, independent UVS observation.

Realtime observation; full F/F scan (1 RIM) and full G/G scan (8 RIMs) off planet. Distance from Jupiter = 1.8 Rj.

Last cn/ck = 104.13/275.53.

Design Detail

```
PSID   CDS RIM COMMAND PARAMETERS
384AT   00   00 COMMNT UVS RIM 0
349LQ   28   00+UVFLSH DISCRD,UVS
157AK   52   01 CMDRS   PLAN_DUR = 13 RIMS; EST_UVS_CMDS = 3
             02       1
34UVS/UVF:07,SCAN,NORM,NORM,NORM,SAME,0,ON,OFF,OFF,ON,OFF,NOOVR,1,00,9C,00,00
             04       3
34UVS/UVG:07,SCAN,NORM,NORM,NORM,SAME,0,OFF,OFF,ON,ON,OFF,NOOVR,1,2C,9D,00,00
             13      12
34UVS/OFF:C1,FIXED,NORM,NORM,NORM,SAME,0,OFF,OFF,ON,OFF,OFF,NOOVR,1,2C,05,00,00
165AU   36   02 TARGET RA/Dec = 84.23/27.80 (no TMC)
349LR   28   02+UVFLSH PACKET,UVS
349LS   28   11+UVFLSH PACKET,UVS
```

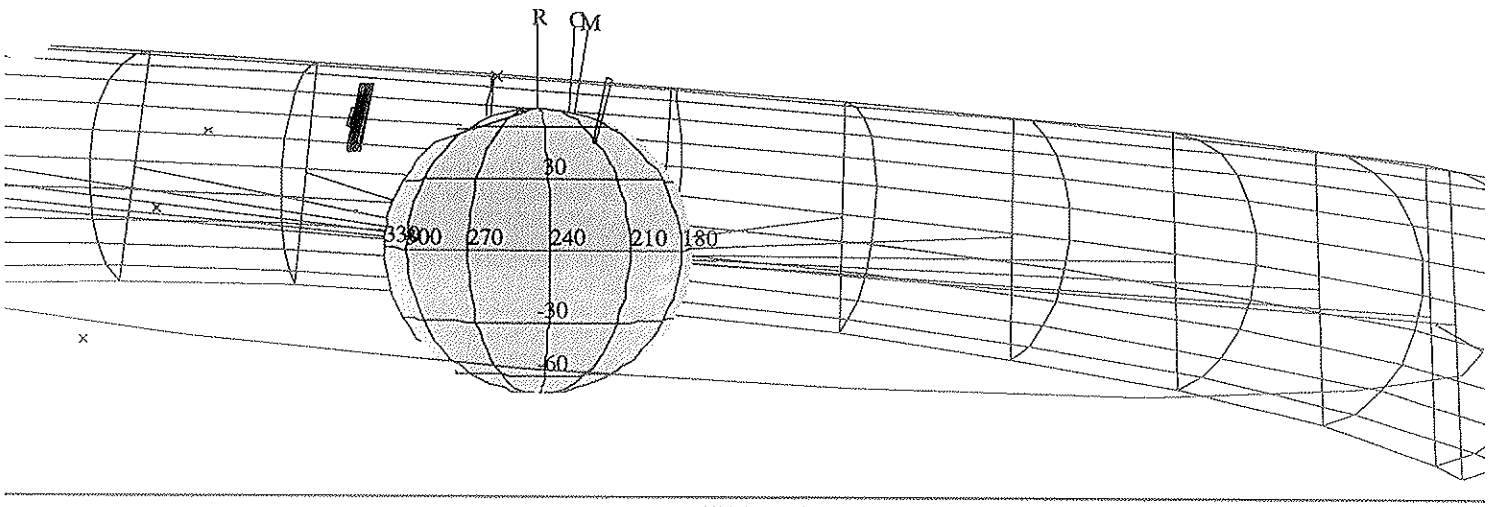

165AU:TT= 0 TMC= 1 C= 0.00 XC= 0.00 BS= 0/0914 TC=15(27.80 84.23)
A= 182 pD= 182 SR=17.450 RA50= 84.23 DEC50= 27.80 cone=102.01 clock=277.34

ESIGN G2.0 kent :10/22/1996 14: 7: 7

ILE:P.E4JUFTKH1E12

ENTRAL BODY:JUPITER III

INI:m.E4JUFTKH1E12

EPH:/DATA/NAVIO/T-960909-TOUR.NS

APSIS: THINNING: :UVS 1

TART:JHP 96-353/02:21:58.733 +CDS 3135:00:0 BODY PLOT TIME:TARGET-TIME D= 182 S= 0.400

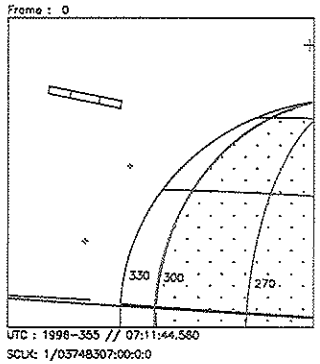

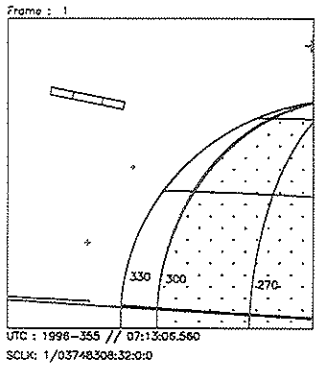

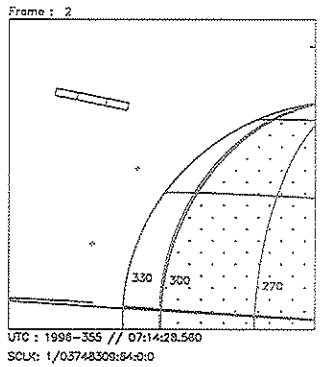

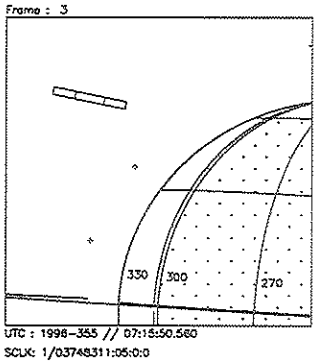

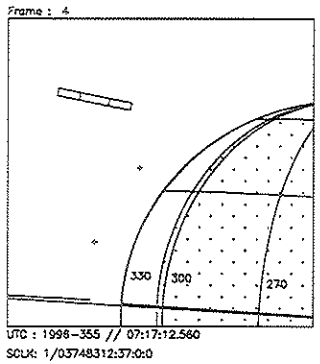

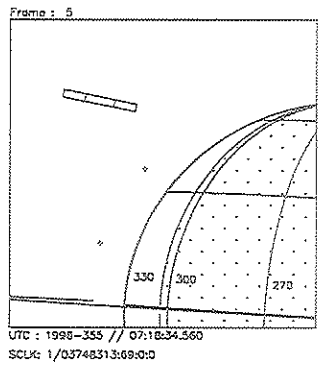

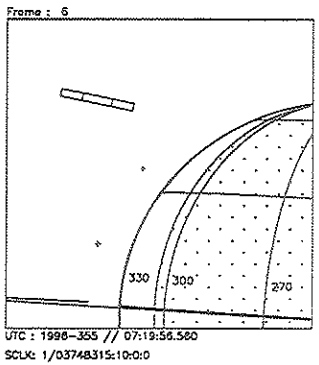

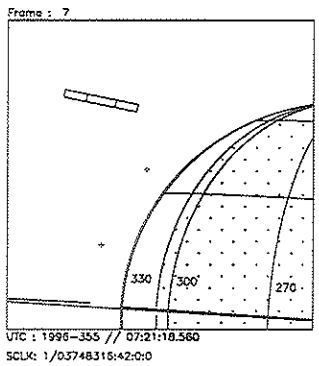

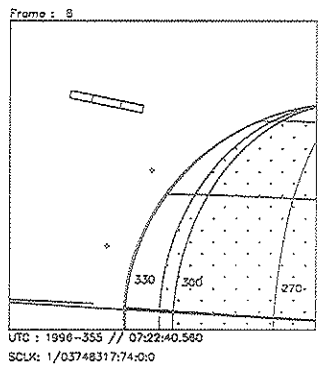

Start UTC_TIME : 1996-355 // 07:11:44.560
No End Time :
Start SCLK : 1/03748307:00:0:0

Target Body : JUPITER
Target Cone/Clock : 106.32/279.26 Deg
S/C to Body Center : 129901:. Km (18.170141 Rj)
Z-axis Pointing (Ra / Dec) : 191.50 / 6.50 Deg

Activity ID: Orbit E4 OAPEL JUFTKH1E SeqNo 21+

Title HOT SPOT FEATURE TRACK **Instrument** UVS

Requestor UVS-AWG/W. KENT TOBISKA **Team** UVS **Working Group** AWG

Time System CDS **Load ID** E4A **Calendar Date** 12/20/96 **Week** 51

Start	JSP-CDS 00000039:00:0	96-355/16:10:43.933	JSP-000/00:39:26.000
End	JSP-CDS 00000023:00:0	96-355/16:26:54.600	JSP-000/00:23:15.333
Duration	00000016:00:0	000/00:16:10.667	000/00:16:10.667

Top Label E4JUFTKH1E21+

Bottom Label realtime

Plot Key	UVS	**Type**	SCI		
CDS Bytes	136	**Report Options**	BOTH	**Scan Platform**	No
CDS Source	OAP	**Spin State**	DUAL	**DMS**	No

Observation Objective

AWG hot spot (3/282 lat/lon) feature track (JSP epoch), rotation 2, high solar phase angle 160 deg, emission angle 1, ridealong with 2 color SSI (E4JS160PHA03) 1x1.

Realtime observation; on crescent full F/F scan (1 RIM) and 176 step G/G miniscan covering 1496-1755 A hydrocarbons for two observations. Distance from Jupiter = 22 Rj.

Last cn/ck = TBD.

Design Detail

```
PSID   CDS  RIM  COMMAND  PARAMETERS
384AU   00   00  COMMNT UVS RIM 0
349LT   28   02+UVFLSH  DISCRD,UVS
157AL   52   03  CMDRS   PLAN_DUR = 14 RIMS; EST_UVS_CMDS = 3
             04       1
34UVS/UVF:07,SCAN,NORM,NORM,NORM,SAME,0,ON,OFF,OFF,ON,OFF,NOOVR,1,00,9C,00,00
             06       3
34UVS/UVG:E3,FIXED,NORM,NORM,NORM,SAME,0,OFF,OFF,ON,ON,OFF,NOOVR,1,1A,8E,00,00
             16      13
34UVS/OFF:C1,FIXED,NORM,NORM,NORM,SAME,0,OFF,OFF,ON,OFF,OFF,NOOVR,1,2C,05,00,00
165JG   00   04  TARGET  Lat/lon = 3/276  (RA/Dec = 95.20/25.03)
349LU   28   04+UVFLSH  PACKET,UVS
349LV   28   15+UVFLSH  PACKET,UVS
```

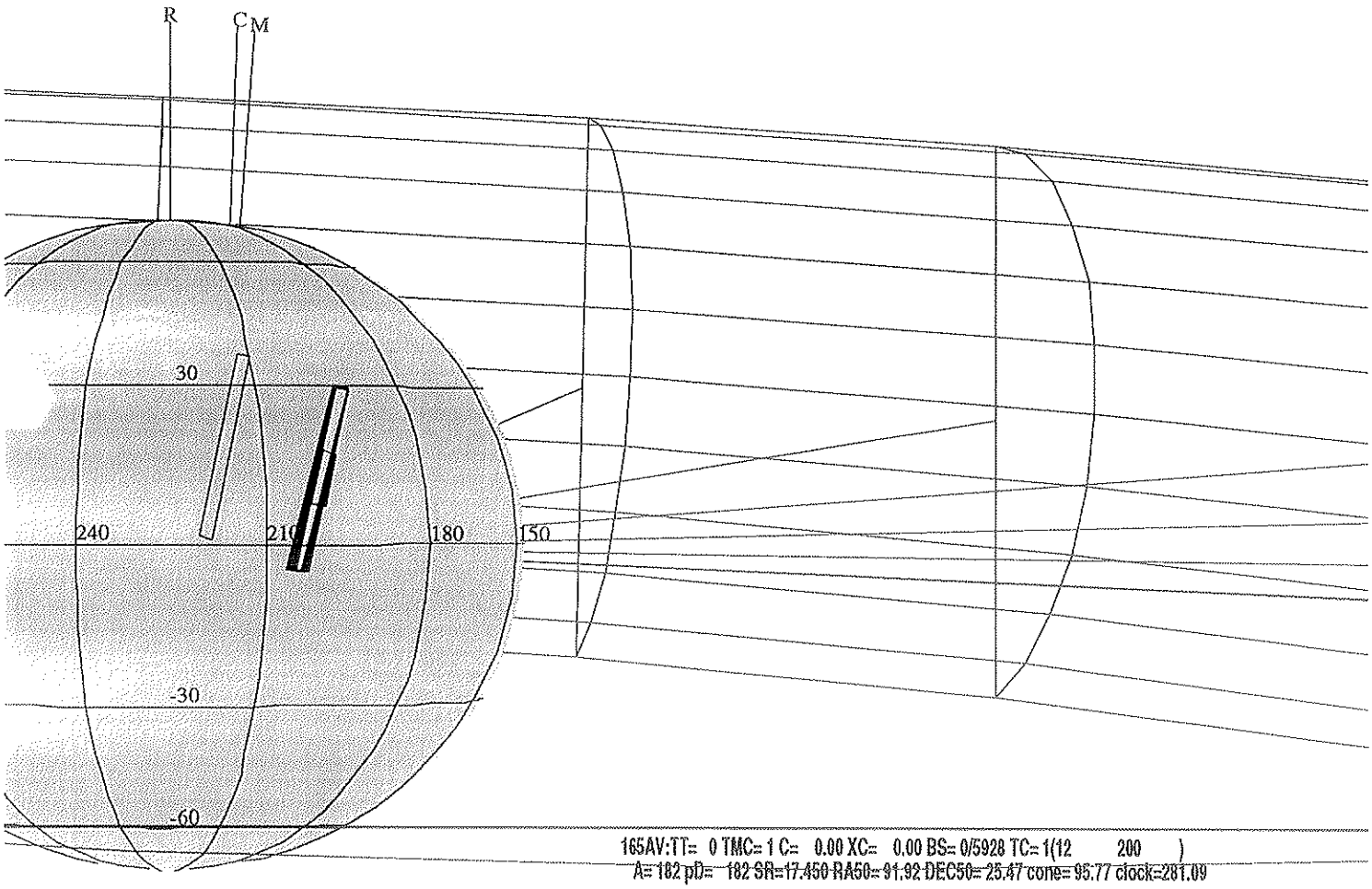

ESIGN G2.0 kent :10/22/1996 14:14:24

ILE:P.E4JUFTKH1E22

ENTRAL BODY:JUPITER III

INI:m.E4JUFTKH1E22

EPH:/DATA/NAVIO/T-960909-TOUR.NS

APSIS: THINNING: :UVS 1

TART:JSP 96-355/16:50:09.933 +CDS 05:00:0 BODY PLOT TIME:TARGET-TIME D= 182 S= 1.000

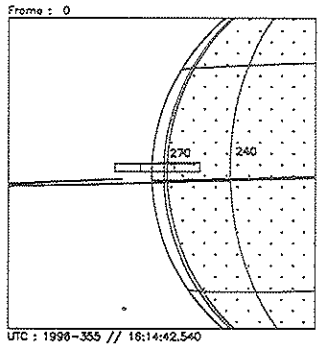

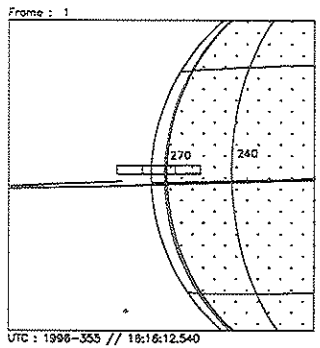

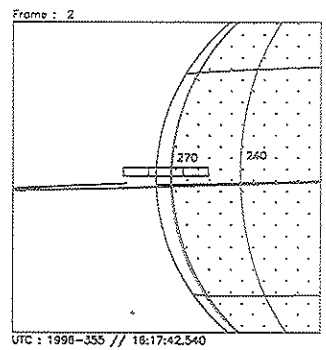

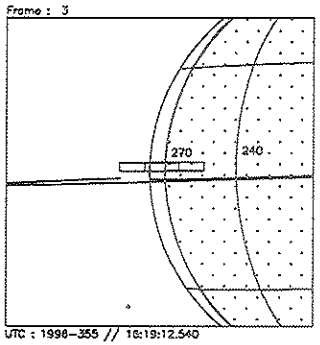

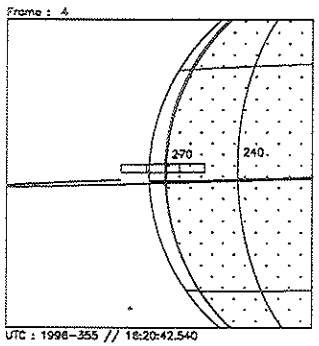

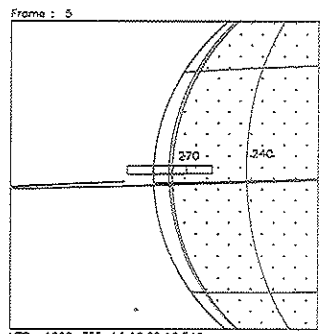

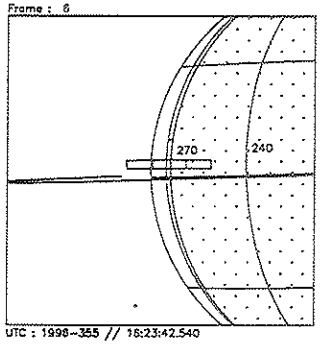

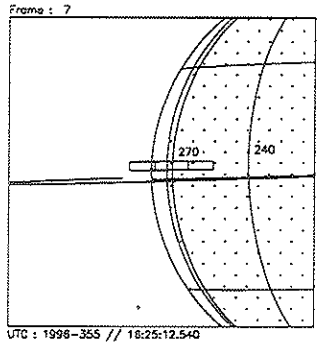

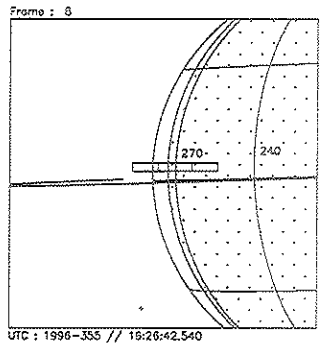

Start UTC_TIME : 1996-355 // 16:14:42.540
No End Time :
Start SCLK : 1/03748844:00:0:0

Target Body : JUPITER
Target Cone/Clock : 95.42/281.65 Deg
S/C to Body Center : 1555731. Km (21.760907 Rj)
Z-axis Pointing (Ra / Dec) : 191.50 / 6.50 Deg

Activity ID: Orbit E4 OAPEL JUFTKH1E SeqNo 22-

Title HOT SPOT FEATURE TRACK **Instrument** UVS

Requestor UVS-AWG/W. KENT TOBISKA **Team** UVS **Working Group** AWG

Time System CDS **Load ID** E4A **Calendar Date** 12/20/96 Week 51

Start	JSP+CDS 00000003:00:0	96-355/16:53:11.933	JSP+000/00:03:02.000
End	JSP+CDS 00000016:00:0	96-355/17:06:20.599	JSP+000/00:16:10.666
Duration	00000013:00:0	000/00:13:08.666	000/00:13:08.666

Top Label E4JUFTKH1E22-

Bottom Label realtime

Plot Key	UVS	**Type**	SCI		
CDS Bytes	172	**Report Options**	BOTH	**Scan Platform**	Yes
CDS Source	OAP	**Spin State**	DUAL	**DMS**	No

Observation Objective

AWG hot spot (3/282 lat/lon) feature track (JSP epoch), rotation 2, high solar phase angle 160 deg, emission angle 1, independent UVS observation.

Realtime observation; full F/F scan (1 RIM) and full G/G scan (8 RIMs) on planet background. Distance from Jupiter = 22 Rj.

Last cn/ck = 92.88/282.03.

Design Detail

```
PSID   CDS RIM COMMAND PARAMETERS
384AV   00   00 COMMNT UVS RIM 0
349LW   28   00+UVFLSH DISCRD,UVS
157AM   52   01 CMDRS  PLAN_DUR = 13 RIMS; EST_UVS_CMDS = 3
             02       1
34UVS/UVF:07,SCAN,NORM,NORM,NORM,SAME,0,ON,OFF,OFF,ON,OFF,NOOVR,1,00,9C,00,00
             04       3
34UVS/UVG:07,SCAN,NORM,NORM,NORM,SAME,0,OFF,OFF,ON,ON,OFF,NOOVR,1,2C,9D,00,00
             13       12
34UVS/OFF:C1,FIXED,NORM,NORM,NORM,SAME,0,OFF,OFF,ON,OFF,OFF,NOOVR,1,2C,05,00,00
165AV   36   02 TARGET Lat/lon = 12/200 (no TMC) (RA/Dec = 91.88/25.48)
349LX   28   02+UVFLSH PACKET,UVS
349LY   28   11+UVFLSH PACKET,UVS
```