Activity ID: Orbit 11 OAPEL CUCALDRK SeqNo 01-

Title UVS Callisto Eclipse Phase 97 **Instrument** UVS

Requestor UVS-SWG/W. SWEET X30523 **Team** UVS **Working Group** SWG

Time System CDS **Load ID** 11A **Calendar Date** 11/02/97 **Week** 44

Start	CEE-CDS 00003698:00:0	97-306/16:57:12.733	CEE-002/14:19:05.333
End	CEE-CDS 00003574:00:0	97-306/19:02:35.400	CEE-002/12:13:42.666
Duration	00000124:00:0	000/02:05:22.667	000/02:05:22.667

Top Label 11CUCALDRK01-

Bottom Label (real-time)

Plot Key UVS **Type** SCI

CDS Bytes 240 **Report Options** BOTH **Scan Platform** Yes

CDS Source OAP **Spin State** DUAL **DMS** No

Observation Objective

11CUCALDRK01- observation. Observe Callisto at ~90° longitude and ~97° phase angle.
Target with TMC. Observe background for 1/2 hour while Callisto enters eclipse. Observe on body for 1.5 hours after Callisto is fully eclipsed. Look for OH. Cycle 4 times with 20 rims HV ON and 10 rims HV OFF for PWS quiet.

UVS configuration: 3090Å N/N 33-step mini-scan
Rj = 44.9

MBTG = 2 flushes * 17712 bits/flush = 0.035

Design Detail

CDS	RIM	COMMAND	PARAMETERS	PSID
0	000	COMMENT	UVS RIM 0	(384CA)
28	003+	UVFLUSH	DISCRD,UVS	(349CA)
37	002	LOOPER	(period 30 rims, num loops 4)	(061CA)
38	003	CMDRS		(157CA)
	004	1	34UVS,D7,F,N,N,N,S,0,OFF, ON,OFF, ON,OFF,NOOVR,1,78,5D,00,00	
	024	21	34UVS,C1,F,N,N,N,S,0,OFF,OFF, ON,OFF,OFF,NOOVR,1,2C,05,00,00	
27	004	TARGET	off body (background)	(165CA)
28	023+	UVFLUSH	PACKET,UVS	(349CB)
54	034	TARGET	with TMC on body	(165CB)
28	114+	UVFLUSH	PACKET,UVS	(349CC)

Frame : 0

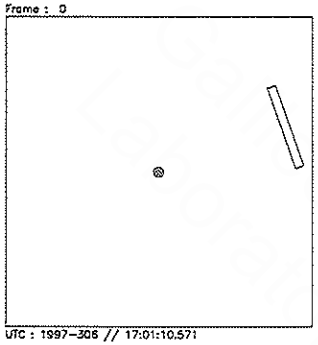

UTC : 1997-306 // 17:01:10.571
SCLK: 1/04200354:00:0:0

Frame : 1

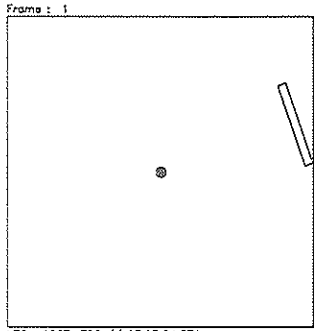

UTC : 1997-306 // 17:15:04.571
SCLK: 1/04200367:68:0:0

Frame : 2

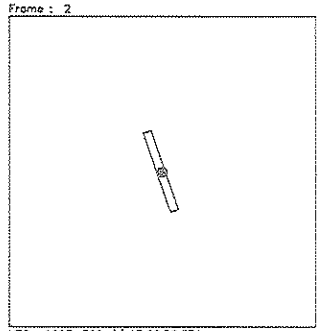

UTC : 1997-306 // 17:28:58.571
SCLK: 1/04200381:45:0:0

Frame : 3

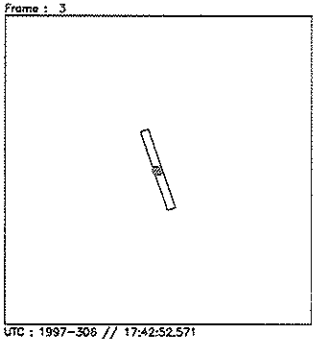

UTC : 1997-306 // 17:42:52.571
SCLK: 1/04200395:22:0:0

Frame : 4

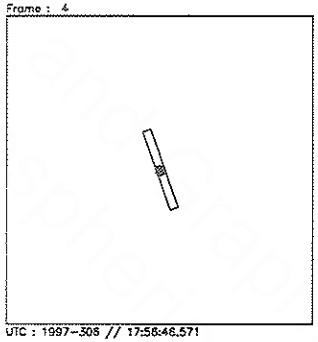

UTC : 1997-306 // 17:56:46.571
SCLK: 1/04200408:90:0:0

Frame : 5

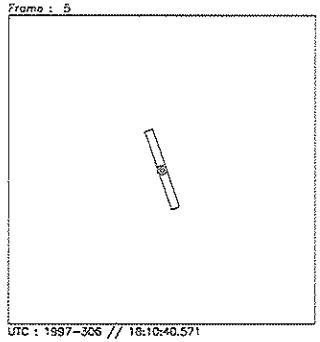

UTC : 1997-306 // 18:10:40.571
SCLK: 1/04200422:67:0:0

Frame : 6

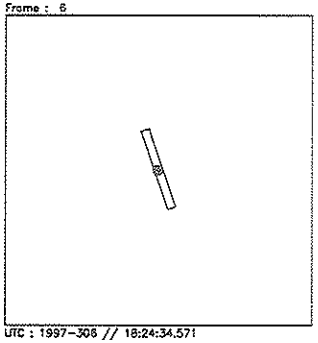

UTC : 1997-306 // 18:24:34.571
SCLK: 1/04200436:44:0:0

Frame : 7

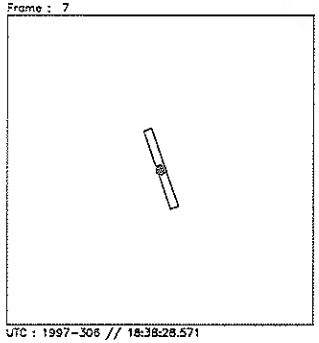

UTC : 1997-306 // 18:38:28.571
SCLK: 1/04200450:21:0:0

Frame : 8

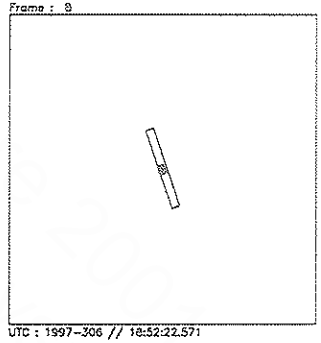

UTC : 1997-306 // 18:52:22.571
SCLK: 1/04200463:89:0:0

Start UTC_TIME : 1997-306 // 17:01:10.571
End UTC_TIME : 1997-306 // 18:52:23.900
Start SCLK : 1/04200354:00:0:0
Delta Time between FOV : 834.0000
FOVs : F Channel(0.1x0.4), N/G Channel(0.1x1.0)

Target Body : CALLISTO
Target Ra/Dec : 224.24/-18.72 Deg
S/C to Body Center : 2476018. Km (1030.3862 Rc)
Z-axis Pointing (Ra / Dec) : 137.25 / 19.00 Deg

Activity ID: Orbit 11 **OAPEL** CUCALDRK **SeqNo** 02-

Title UVS Callisto Eclipse Phase 96 **Instrument** UVS

Requestor UVS-SWG/W. SWEET X30523 **Team** UVS **Working Group** SWG

Time System CDS **Load ID** 11A **Calendar Date** 11/02/97 **Week** 44

Start	CEE-CDS 00003562:00:0	97-306/19:14:43.400	CEE-002/12:01:34.666
End	CEE-CDS 00003528:00:0	97-306/19:49:06.066	CEE-002/11:27:12.000
Duration	00000034:00:0	000/00:34:22.666	000/00:34:22.666

Top Label 11CUCALDRK02-

Bottom Label (real-time)

Plot Key	UVS	**Type**	SCI		
CDS Bytes	120	**Report Options**	BOTH	**Scan Platform**	Yes
CDS Source	OAP	**Spin State**	DUAL	**DMS**	No

Observation Objective

11CUCALDRK02- observation. Observe Callisto at ~90° longitude and ~96° phase angle.
Target with TMC on body. Callisto in eclipse.

UVS configuration: 1356 - 1356 Á G/G 16-step mini-scan
Rj = 44.3

MBTG = 1 flush * 17712 bits/flush = 0.018

Design Detail

```
CDS  RIM  COMMAND  PARAMETERS                                  PSID
---  ---  -------  ----------                                  ----
0    000  COMMENT  UVS RIM 0                                   (384CB)
0    003+UVFLUSH  DISCRD  <--Omitted to save bytes
38   003  CMDRS                                               (157CB)
     004      1   34UVS,D1,F,N,N,N,S,0,OFF,OFF,  ON,  ON,OFF,NOOVR,1,B6,45,00,00
     034     31   34UVS,C1,F,N,N,N,S,0,OFF,OFF,  ON,OFF,OFF,NOOVR,1,2C,05,00,00
54   004  TARGET   with TMC on body                           (165CC)
28   033+UVFLUSH  PACKET,UVS                                  (349CD)
```

Frame : 0

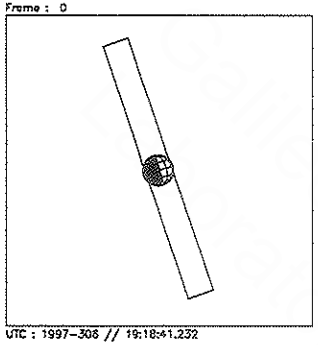

UTC : 1997-306 // 19:18:41.232
SCLK: 1/04200490:00:0

Frame : 1

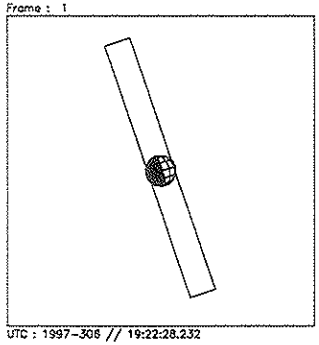

UTC : 1997-306 // 19:22:28.232
SCLK: 1/04200493:67:5

Frame : 2

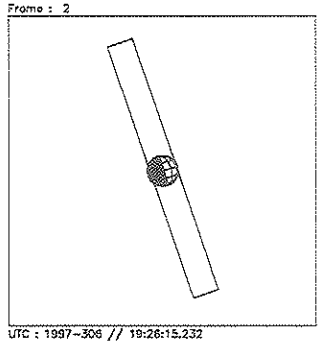

UTC : 1997-306 // 19:26:15.232
SCLK: 1/04200497:44:0

Frame : 3

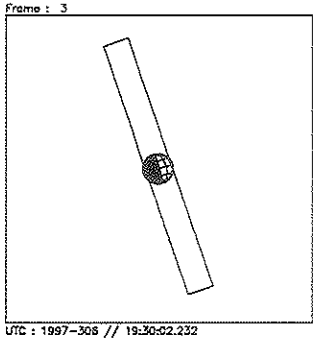

UTC : 1997-306 // 19:30:02.232
SCLK: 1/04200501:20:5

Frame : 4

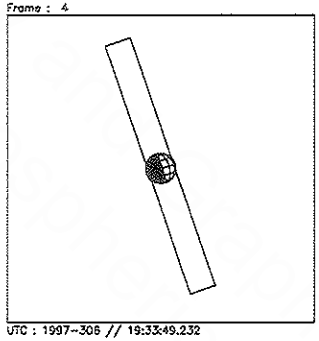

UTC : 1997-306 // 19:33:49.232
SCLK: 1/04200504:88:0

Frame : 5

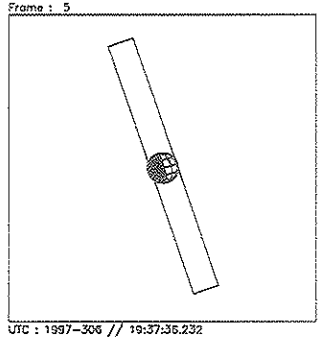

UTC : 1997-306 // 19:37:36.232
SCLK: 1/04200508:64:5

Frame : 6

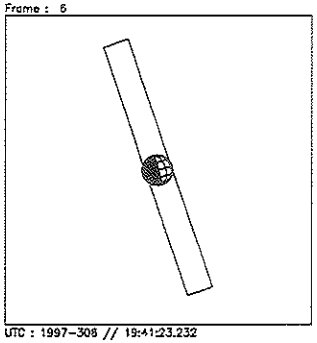

UTC : 1997-306 // 19:41:23.232
SCLK: 1/04200512:41:0

Frame : 7

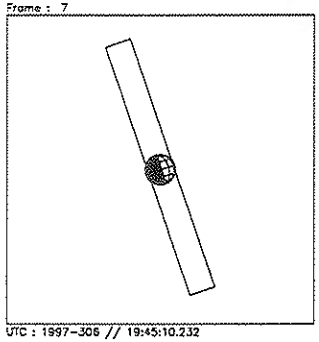

UTC : 1997-306 // 19:45:10.232
SCLK: 1/04200516:17:5

Frame : 8

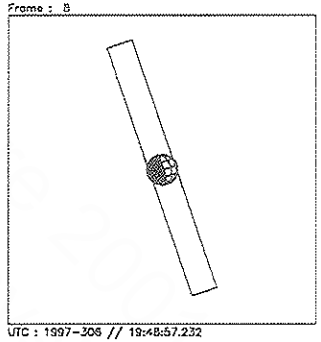

UTC : 1997-306 // 19:48:57.232
SCLK: 1/04200519:85:0

Start UTC_TIME : 1997-306 // 19:18:41.232
End UTC_TIME : 1997-306 // 19:49:01.231
Start SCLK : 1/04200490:00:0
Delta Time between FOV : 227.0000
FOVs : F Channel(0.1x0.4), N/G Channel(0.1x1.0)

Target Body : CALLISTO
Target Ra/Dec : 225.36/-19.04 Deg
S/C to Body Center : 2388863. Km (994.11712 Rc)
Z-axis Pointing (Ra / Dec) : 137.25 / 19.00 Deg

Activity ID: Orbit 11 **OAPEL** CUPHAS89 **SeqNo** 01-

Title UVS Callisto Phase 89 **Instrument** UVS

Requestor UVS-SWG/W. SWEET X30523 **Team** UVS **Working Group** SWG

Time System CDS **Load ID** 11A **Calendar Date** 11/03/97 **Week** 44

Start	CEE-CDS 00002951:00:0	97-307/05:32:30.733	CEE-002/01:43:47.333
End	CEE-CDS 00002917:00:0	97-307/06:06:53.400	CEE-002/01:09:24.666
Duration	00000034:00:0	000/00:34:22.667	000/00:34:22.667

Top Label 11CUPHAS8901-

Bottom Label (real-time)

Plot Key	UVS	**Type**	SCI		
CDS Bytes	148	**Report Options**	BOTH	**Scan Platform**	Yes
CDS Source	OAP	**Spin State**	DUAL	**DMS**	No

Observation Objective

11CUPHAS8901- observation. Observe Europa at ~100° longitude and ~89° phase angle.
Target with TMC.

UVS configuration: F/F full scans
Rj = 41.25

MBTG = 1 flush * 17712 bits/flush = 0.018

Design Detail

```
CDS  RIM  COMMAND   PARAMETERS                                          PSID
---  ---  --------  ----------                                          ----
0    000  COMMENT   UVS RIM 0                                          (384CC)
28   003+UVFLUSH    DISCRD,UVS                                          (349CE)
38   003  CMDRS                                                        (157CC)
     004       1    34UVS,07,S,N,N,N,S,0,  ON,OFF,OFF,  ON,OFF,NOOVR,1,00,9C,00,00
     034      31    34UVS,C1,F,N,N,N,S,0,OFF,OFF,  ON,OFF,OFF,NOOVR,1,2C,05,00,00
54   004  TARGET    with TMC on body                                    (165CD)
28   033+UVFLUSH    PACKET,UVS                                          (349CF)
```

Frame : 0

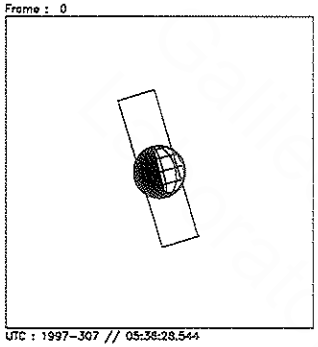

UTC : 1997-307 // 05:36:28.544
SCLK: 1/04201101:00:0:0

Frame : 1

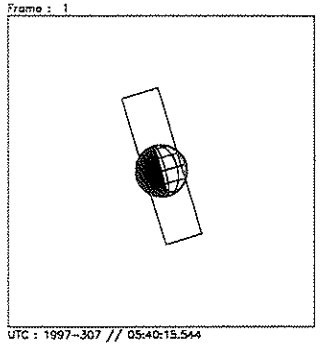

UTC : 1997-307 // 05:40:15.544
SCLK: 1/04201104:87:5:0

Frame : 2

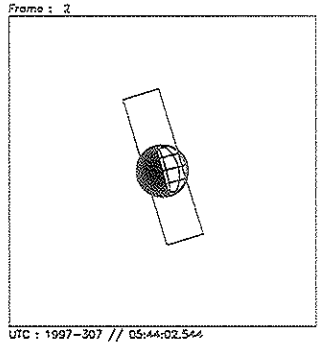

UTC : 1997-307 // 05:44:02.544
SCLK: 1/04201108:44:0:0

Frame : 3

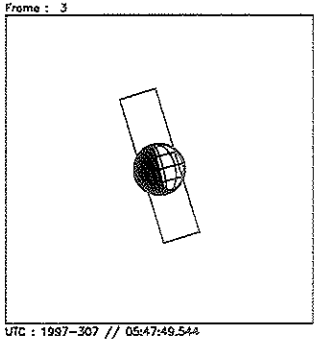

UTC : 1997-307 // 05:47:49.544
SCLK: 1/04201112:20:5:0

Frame : 4

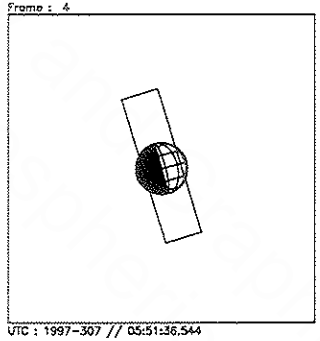

UTC : 1997-307 // 05:51:36.544
SCLK: 1/04201115:88:0:0

Frame : 5

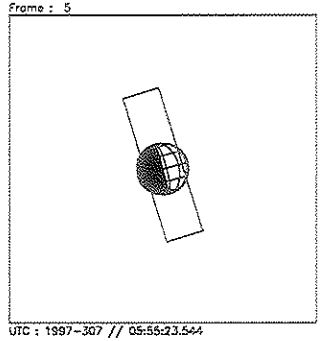

UTC : 1997-307 // 05:55:23.544
SCLK: 1/04201119:64:5:0

Frame : 6

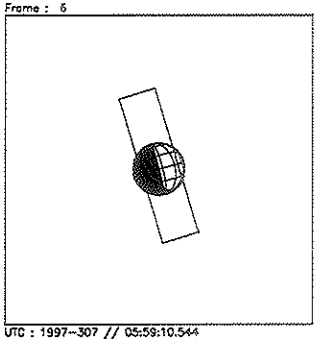

UTC : 1997-307 // 05:59:10.544
SCLK: 1/04201123:41:0:0

Frame : 7

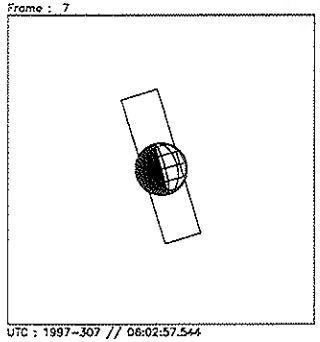

UTC : 1997-307 // 06:02:57.544
SCLK: 1/04201127:17:5:0

Frame : 8

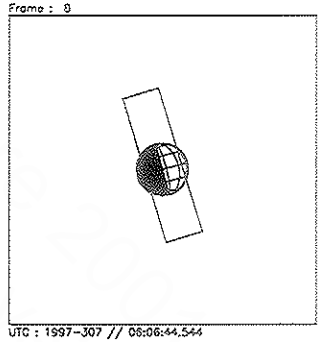

UTC : 1997-307 // 06:06:44.544
SCLK: 1/04201130:85:0:0

Start UTC_TIME : 1997-307 // 05:36:28.544
End UTC_TIME : 1997-307 // 06:06:48.543
Start SCLK : 1/04201101:00:0:0
Delta Time between FOV : 227.0000
FOVs : F Channel(0.1x0.4), N/G Channel(0.1x1.0)

Target Body : CALLISTO
Target Ra/Dec : 230.98/-20.52 Deg
S/C to Body Center : 2003639. Km (833.80723 Rc)
Z-axis Pointing (Ra / Dec) : 137.25 / 19.00 Deg

Activity ID: Orbit 11 **OAPEL** CUPHAS61 **SeqNo** 01-

Title UVS Callisto Phase 61 **Instrument** UVS

Requestor UVS-SWG/W. SWEET X30523 **Team** UVS **Working Group** SWG

Time System CDS **Load ID** 11A **Calendar Date** 11/04/97 **Week** 45

Start	CEE-CDS 00001149:00:0	97-308/11:54:32.066	CEE-000/19:21:46.000
End	CEE-CDS 00001120:00:0	97-308/12:23:51.400	CEE-000/18:52:26.666
Duration	00000029:00:0	000/00:29:19.334	000/00:29:19.334

Top Label 11CUPHAS6101-

Bottom Label (real-time)

Plot Key	UVS	**Type**	SCI		
CDS Bytes	148	**Report Options**	BOTH	**Scan Platform**	Yes
CDS Source	OAP	**Spin State**	DUAL	**DMS**	No

Observation Objective

```
11CUPHAS6101- observation.  Observe Callisto at ~90° longitude and
~61° phase angle.
Target with TMC.

UVS configuration: F/F full scans
Rj = 31.26

MBTG = 1 flush * 17712 bits/flush = 0.018
```

Design Detail

```
CDS  RIM  COMMAND  PARAMETERS                                          PSID
---  ---  -------  ----------                                          ----
0    000  COMMENT  UVS RIM 0                                          (384CF)
28   003+UVFLUSH  DISCRD,UVS                                          (349CK)
38   003  CMDRS                                                       (157CF)
     004      1   34UVS,07,S,N,N,N,S,0,  ON,OFF,OFF,  ON,OFF,NOOVR,1,00,9C,00,00
     029     26   34UVS,C1,F,N,N,N,S,0,OFF,OFF,  ON,OFF,OFF,NOOVR,1,2C,05,00,00
54   004  TARGET   with TMC on body                                    (165CG)
28   028+UVFLUSH  PACKET,UVS                                          (349CL)
```

Frame : 0

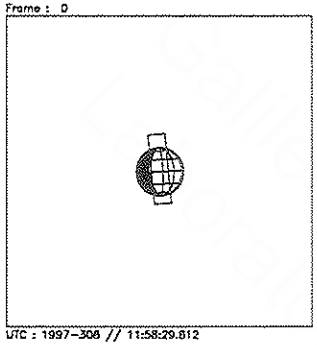

UTC : 1997-308 // 11:58:29.812
SCLK: 1/04202903:00:0:0

Frame : 1

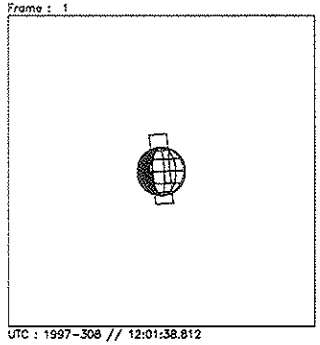

UTC : 1997-308 // 12:01:38.812
SCLK: 1/04202908:10:5:0

Frame : 2

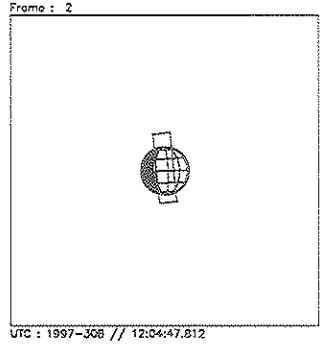

UTC : 1997-308 // 12:04:47.812
SCLK: 1/04202909:21:0:0

Frame : 3

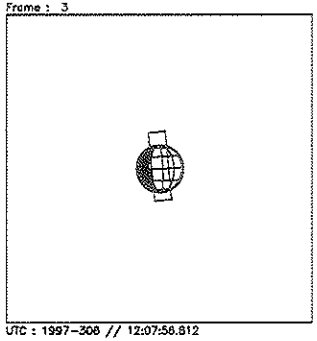

UTC : 1997-308 // 12:07:56.812
SCLK: 1/04202912:31:5:0

Frame : 4

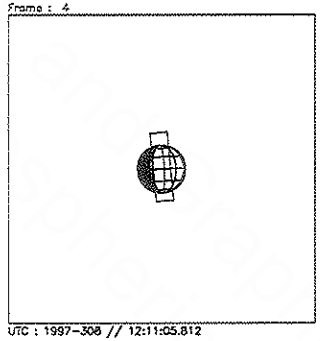

UTC : 1997-308 // 12:11:05.812
SCLK: 1/04202915:42:0:0

Frame : 5

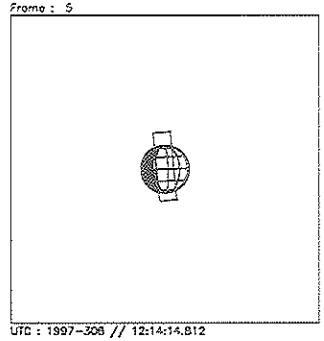

UTC : 1997-308 // 12:14:14.812
SCLK: 1/04202918:52:5:0

Frame : 6

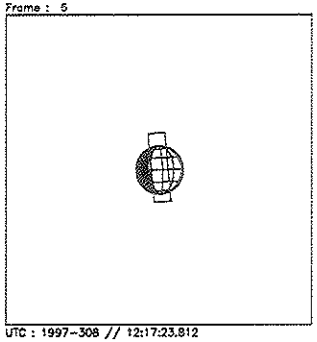

UTC : 1997-308 // 12:17:23.812
SCLK: 1/04202921:63:0:0

Frame : 7

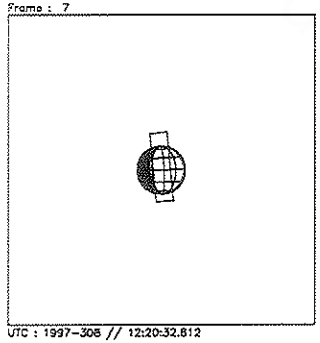

UTC : 1997-308 // 12:20:32.812
SCLK: 1/04202924:73:5:0

Frame : 8

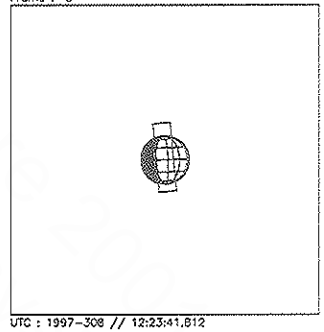

UTC : 1997-308 // 12:23:41.812
SCLK: 1/04202927:84:0:0

Start UTC_TIME : 1997-308 // 11:58:29.812
End UTC_TIME : 1997-308 // 12:23:46.477
Start SCLK : 1/04202903:00:0:0
Delta Time between FOV : 189.0000
FOVs : F Channel(0.1x0.4), N/G Channel(0.1x1.0)

Target Body : CALLISTO
Target Ra/Dec : 261.68/-24.86 Deg
S/C to Body Center : 989753.6 Km (411.88247 Rc)
Z-axis Pointing (Ra / Dec) : 137.25 / 19.00 Deg

Activity ID:	**Orbit** 11	**OAPEL** EUEUDARK		**SeqNo**	02-
Title	UVS Europa Eclipse Observation 2			**Instrument**	UVS
Requestor	UVS-SWG/W. SWEET X30523	**Team**	UVS	**Working Group**	SWG

Time System	CDS	**Load ID**	11A	**Calendar Date**	11/05/97	Week	45

Start	EEE-CDS 00002343:00:0	97-309/05:02:50.400	EEE-001/15:29:02.000
End	EEE-CDS 00002266:00:0	97-309/06:20:41.734	EEE-001/14:11:10.666
Duration	00000077:00:0	000/01:17:51.334	000/01:17:51.334

Top Label	11EUEUDARK02-				
Bottom Label	(real-time)				
Plot Key	UVS	**Type**	SCI		
CDS Bytes	148	**Report Options**	BOTH	**Scan Platform**	Yes
CDS Source	OAP	**Spin State**	DUAL	**DMS**	No

Observation Objective

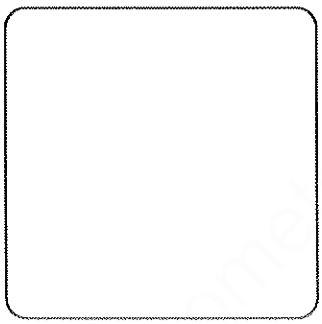

11EUEUDARK02- observation. Observe Europa in eclipse at 90° longitude. Time satellite is completely in umbra shadow. Target with TMC.

UVS configuration: 1356-1479 Å G/G 22-step mini-scans
Rj = 24.9

MBTG = 1 flush * 17712 bits/flush = 0.018

Design Detail

```
CDS  RIM  COMMAND  PARAMETERS                                    PSID
---  ---  -------  ----------                                    ----
0    000  COMMENT  UVS RIM 0                                     (384CE)
0    003+UVFLUSH  DISCRD,UVS  <--Omitted to save bytes
66   003  CMDRS                                                 (157CE)
     004      1   34UVS,D3,F,N,N,N,S,0,OFF,OFF,  ON,  ON,OFF,NOOVR,1,B3,4D,00,51
     029     26   34UVS,C1,F,N,N,N,S,0,OFF,OFF,  ON,OFF,OFF,NOOVR,1,2C,05,00,00
     052     49   34UVS,D3,F,N,N,N,S,0,OFF,OFF,  ON,  ON,OFF,NOOVR,1,B3,4D,00,51
     077     74   34UVS,C1,F,N,N,N,S,0,OFF,OFF,  ON,OFF,OFF,NOOVR,1,2C,05,00,00
54   004  TARGET   with TMC on body                             (165CF)
28   076+UVFLUSH  PACKET,UVS                                    (349CI)
```

Frame : 0

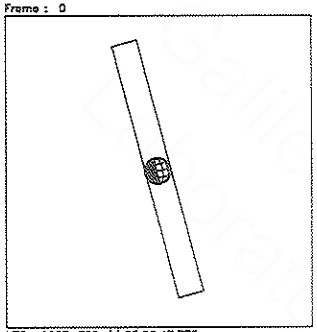

UTC : 1997-309 // 05:06:47.775
SCLK: 1/04203920:00:0:0

Frame : 1

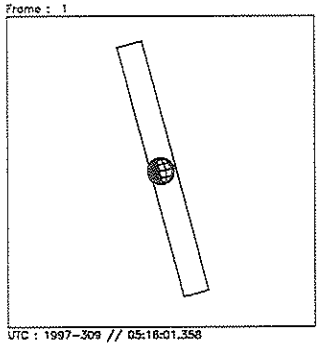

UTC : 1997-309 // 05:16:01.358
SCLK: 1/04203929:11:3:6

Frame : 2

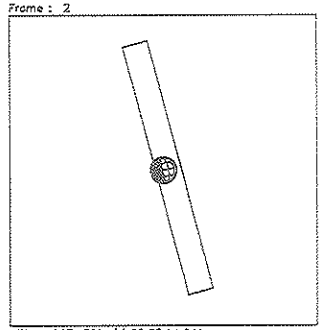

UTC : 1997-309 // 05:25:14.941
SCLK: 1/04203938:22:7:4

Frame : 3

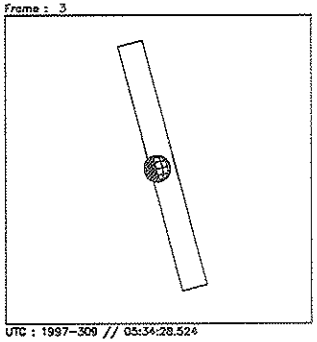

UTC : 1997-309 // 05:34:28.524
SCLK: 1/04203947:34:1:2

Frame : 4

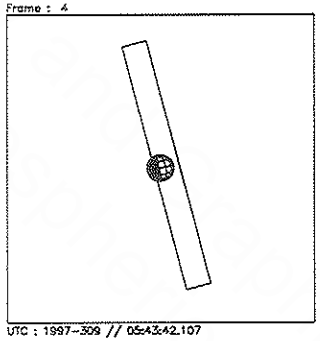

UTC : 1997-309 // 05:43:42.107
SCLK: 1/04203956:45:5:0

Frame : 5

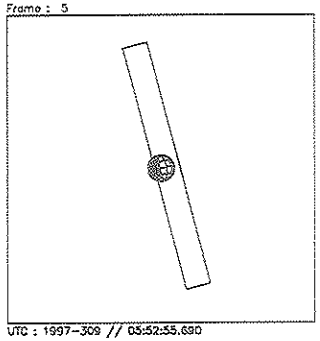

UTC : 1997-309 // 05:52:55.690
SCLK: 1/04203965:56:8:6

Frame : 6

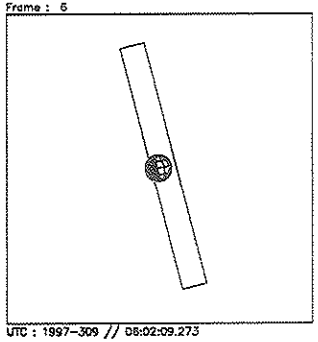

UTC : 1997-309 // 06:02:09.273
SCLK: 1/04203974:68:2:4

Frame : 7

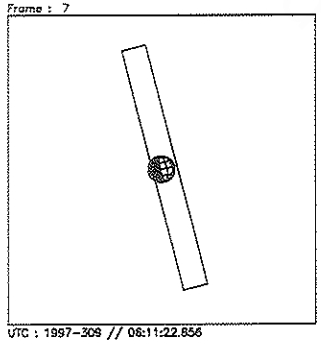

UTC : 1997-309 // 06:11:22.856
SCLK: 1/04203983:79:6:2

Frame : 8

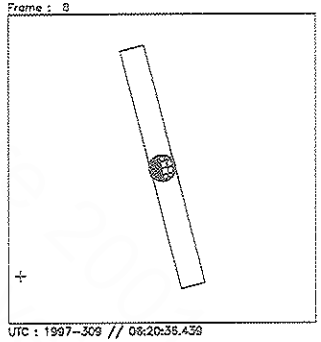

UTC : 1997-309 // 06:20:36.439
SCLK: 1/04203993:00:0:0

Start UTC_TIME : 1997-309 // 05:06:47.775
End UTC_TIME : 1997-309 // 06:20:36.439
Start SCLK : 1/04203920:00:0:0
Delta Time between FOV : 553.5830
FOVs : F Channel(0.1x0.4), N/G Channel(0.1x1.0)

Target Body : EUROPA
Target Ra/Dec : 236.97/-21.70 Deg
S/C to Body Center : 1753179. Km (1120.2424 Re)
Z-axis Pointing (Ra / Dec) : 137.25 / 19.00 Deg

ACTIVITY ID: 11EUEUDARK01-

START TIME: 97-309/06:52:02.000

Activity ID: Orbit 11 **OAPEL** EUEUDARK **SeqNo** 01-

Title UVS Europa Eclipse Observation 1 **Instrument** UVS

Requestor UVS-SWG/W. SWEET X30523 **Team** UVS **Working Group** SWG

Time System CDS **Load ID** 11A **Calendar Date** 11/05/97 **Week** 45

Start	EEE-CDS 00002235:00:0	97-309/06:52:02.000	EEE-001/13:39:50.000
End	EEE-CDS 00002211:00:0	97-309/07:16:18.000	EEE-001/13:15:34.000
Duration	00000024:00:0	000/00:24:16.000	000/00:24:16.000

Top Label 11EUEUDARK01-

Bottom Label (real-time)

Plot Key UVS **Type** SCI

CDS Bytes 148 **Report Options** BOTH **Scan Platform** Yes

CDS Source OAP **Spin State** DUAL **DMS** No

Observation Objective

11EUEUDARK01- observation. Observe Europa in eclipse at 90° longitude. Time satellite is completely in umbra shadow. Target with TMC.

UVS configuration: 1356-1479 Å G/G 22-step mini-scans
Rj = 24.0

MBTG = 1 flush * 17712 bits/flush = 0.018

Design Detail

```
CDS  RIM  COMMAND  PARAMETERS                                    PSID
---  ---  -------  ----------                                    ----
0    000  COMMENT  UVS RIM 0                                     (384CG)
28   003+UVFLUSH  DISCRD,UVS                                     (349CM)
38   003  CMDRS                                                  (157CH)
     004      1   34UVS,D3,F,N,N,N,S,0,OFF,OFF,  ON,  ON,OFF,NOOVR,1,B3,4D,00,51
     024     21   34UVS,C1,F,N,N,N,S,0,OFF,OFF,  ON,OFF,OFF,NOOVR,1,2C,05,00,00
54   004  TARGET   with TMC on body                             (165CH)
28   023+UVFLUSH  PACKET,UVS                                     (349CN)
```

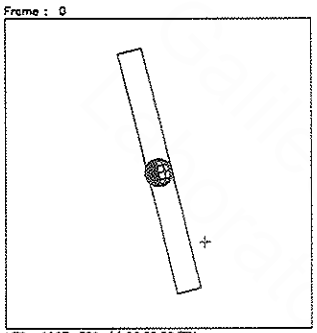

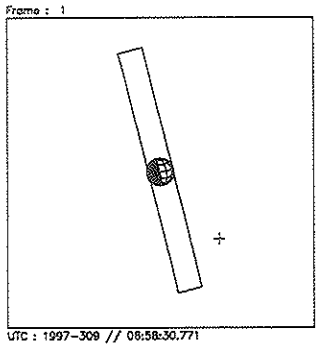

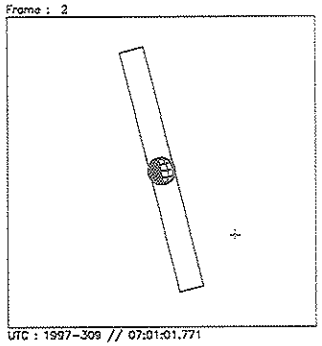

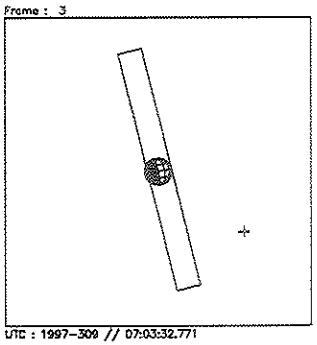

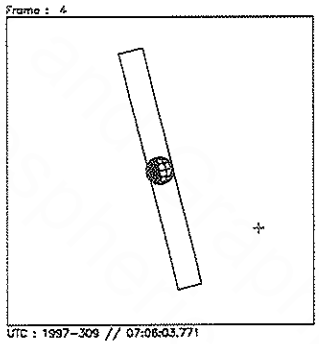

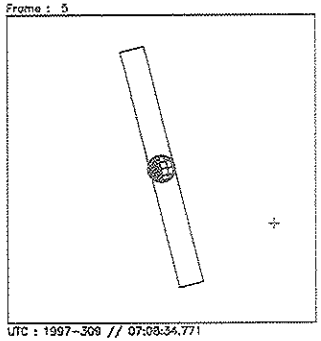

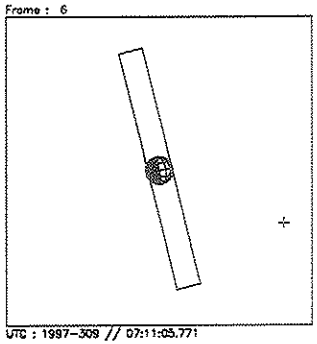

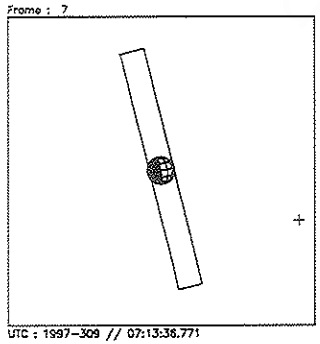

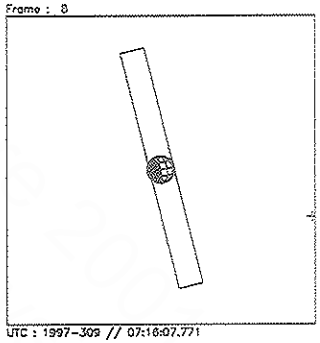

Start UTC_TIME : 1997-309 // 06:55:59.771
End UTC_TIME : 1997-309 // 07:16:13.104
Start SCLK : 1/04204028:00:0:0
Delta Time between FOV : 151.0000
FOVs : F Channel(0.1x0.4), N/G Channel(0.1x1.0)

Target Body : EUROPA
Target Ra/Dec : 239.55/-22.20 Deg
S/C to Body Center : 1633699. Km (1043.8973 Re)
Z-axis Pointing (Ra / Dec) : 137.25 / 19.00 Deg

Activity ID: Orbit 11 **OAPEL** EUPHAS65 **SeqNo** 01-

Title UVS Europa Phase 65 **Instrument** UVS

Requestor UVS-SWG/W. SWEET X30523 **Team** UVS **Working Group** SWG

Time System CDS **Load ID** 11A **Calendar Date** 11/05/97 **Week** 45

Start	EEE-CDS 00001326:00:0	97-309/22:11:08.000	EEE-000/22:20:44.000
End	EEE-CDS 00001292:00:0	97-309/22:45:30.667	EEE-000/21:46:21.333
Duration	00000034:00:0	000/00:34:22.667	000/00:34:22.667

Top Label 11EUPHAS6501-

Bottom Label (real-time)

Plot Key	UVS	**Type**	SCI		
CDS Bytes	148	**Report Options**	BOTH	**Scan Platform**	Yes
CDS Source	OAP	**Spin State**	DUAL	**DMS**	No

Observation Objective

11EUPHAS6501- observation. Observe Europa at ~135° longitude and ~65° phase angle.
Target with TMC on body.

UVS configuration: 1356-1479 Å G/G 22-step mini-scans
Rj= 17.7

MBTG = 1 flush * 17712 bits/flush = 0.018

Design Detail

```
CDS  RIM  COMMAND  PARAMETERS                                    PSID
---  ---  -------  ----------                                    ----
0    000  COMMENT  UVS RIM 0                                     (384CH)
28   003+UVFLUSH  DISCRD,UVS                                     (349CO)
38   003  CMDRS                                                  (157CI)
     004      1   34UVS,D3,F,N,N,N,S,0,OFF,OFF,  ON,  ON,OFF,NOOVR,1,B3,4D,00,51
     034     31   34UVS,C1,F,N,N,N,S,0,OFF,OFF,  ON,OFF,OFF,NOOVR,1,2C,05,00,00
54   004  TARGET   with TMC on body                             (165CI)
28   033+UVFLUSH  PACKET,UVS                                     (349CP)
```

Frame : 0

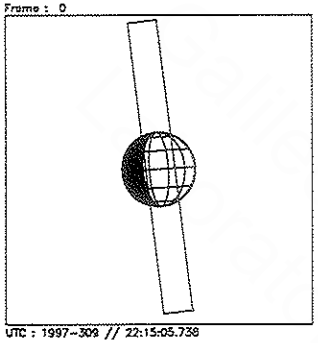

UTC : 1997-309 // 22:15:05.738
SCLK: 1/04204937:00:0:0

Frame : 1

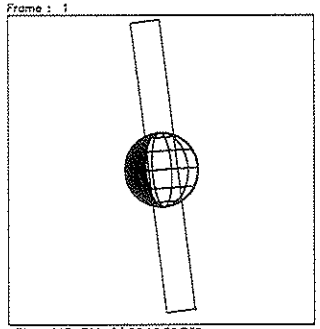

UTC : 1997-309 // 22:18:52.738
SCLK: 1/04204940:67:5:0

Frame : 2

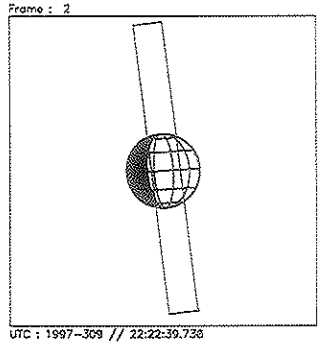

UTC : 1997-309 // 22:22:39.738
SCLK: 1/04204944:64:0:0

Frame : 3

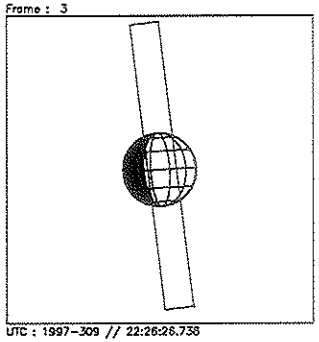

UTC : 1997-309 // 22:26:26.738
SCLK: 1/04204948:20:5:0

Frame : 4

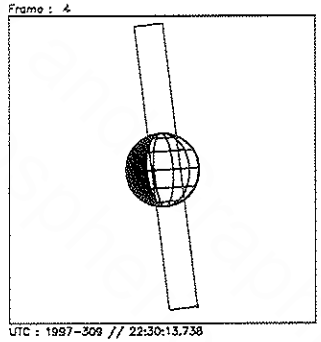

UTC : 1997-309 // 22:30:13.738
SCLK: 1/04204951:88:0:0

Frame : 5

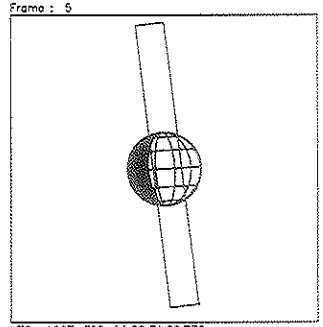

UTC : 1997-309 // 22:34:00.738
SCLK: 1/04204955:64:5:0

Frame : 6

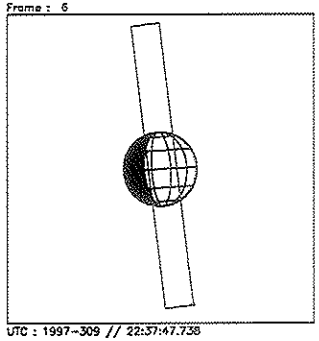

UTC : 1997-309 // 22:37:47.738
SCLK: 1/04204959:41:0:0

Frame : 7

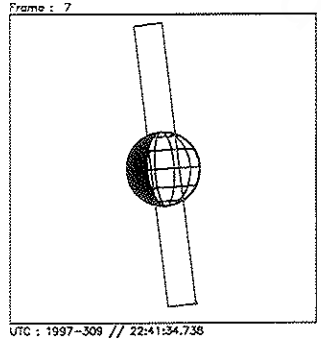

UTC : 1997-309 // 22:41:34.738
SCLK: 1/04204963:17:5:0

Frame : 8

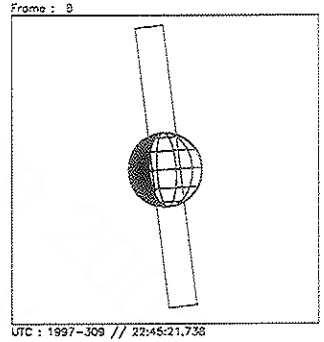

UTC : 1997-309 // 22:45:21.738
SCLK: 1/04204966:85:0:0

Start UTC_TIME : 1997-309 // 22:15:05.738
End UTC_TIME : 1997-309 // 22:45:25.737
Start SCLK : 1/04204937:00:0:0
Delta Time between FOV : 227.0000
FOVs : F Channel(0.1x0.4), N/G Channel(0.1x1.0)

Target Body : EUROPA
Target Ra/Dec : 258.31/-24.47 Deg
S/C to Body Center : 708308.4 Km (452.59324 Re)
Z-axis Pointing (Ra / Dec) : 137.25 / 19.00 Deg

Activity ID: Orbit 11 **OAPEL** EUPHAS64 **SeqNo** 01-

Title UVS Europa Phase 64 **Instrument** UVS

Requestor UVS-SWG/W. SWEET X30523 **Team** UVS **Working Group** SWG

Time System CDS **Load ID** 11A **Calendar Date** 11/05/97 **Week** 45

Start	EEE-CDS 00001261:00:0	97-309/23:16:51.334	EEE-000/21:15:00.666
End	EEE-CDS 00001217:00:0	97-310/00:01:20.667	EEE-000/20:30:31.333
Duration	00000044:00:0	000/00:44:29.333	000/00:44:29.333

Top Label 11EUPHAS6401-

Bottom Label (real-time)

Plot Key UVS **Type** SCI

CDS Bytes 120 **Report Options** BOTH **Scan Platform** Yes

CDS Source OAP **Spin State** DUAL **DMS** No

Observation Objective

11EUPHAS6401~ observation. Observe Europa at ~139° longitude and ~64° phase angle.
Target with TMC on body.

UVS configuration: 1216-1304 Å G/G 16~step mini-scans
Rj = 17.3

MBTG = 2 flushes * 17712 bits/flush = 0.035

Design Detail

```
CDS  RIM  COMMAND  PARAMETERS                                  PSID
---  ---  -------  ----------                                  ----
0    000  COMMENT  UVS RIM 0                                   (384CI)
0    003+UVFLUSH  DISCRD  <--Omitted to save bytes
38   003  CMDRS                                               (157CJ)
     004      1   34UVS,D1,F,N,N,N,S,0,OFF,OFF,  ON,  ON,OFF,NOOVR,1,5A,45,00,39
     044     41   34UVS,C1,F,N,N,N,S,0,OFF,OFF,  ON,OFF,OFF,NOOVR,1,2C,05,00,00
54   004  TARGET   with TMC on body                           (165CJ)
28   043+UVFLUSH  PACKET,UVS                                  (349CR)
```

Frame : 0

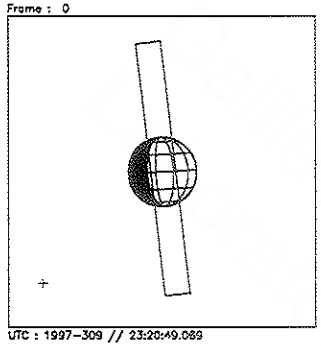

UTC : 1997-309 // 23:20:49.069
SCLK: 1/04205002:00:0:0

Frame : 1

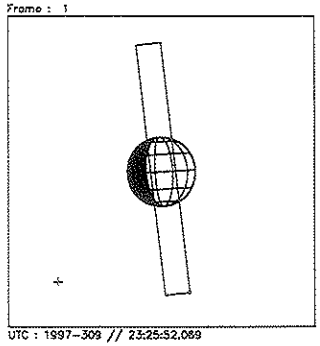

UTC : 1997-309 // 23:25:52.069
SCLK: 1/04205006:90:5:0

Frame : 2

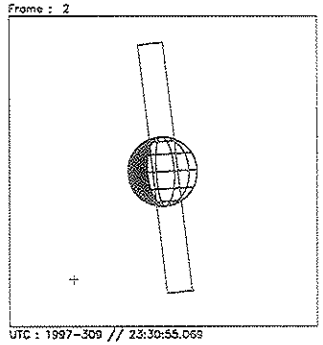

UTC : 1997-309 // 23:30:55.069
SCLK: 1/04205011:90:0:0

Frame : 3

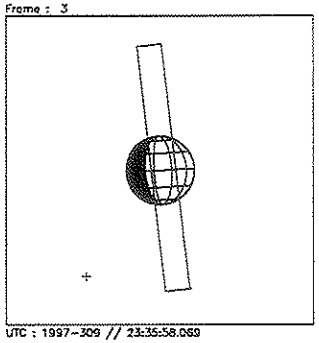

UTC : 1997-309 // 23:35:58.069
SCLK: 1/04205016:89:5:0

Frame : 4

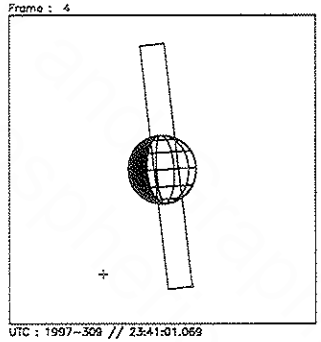

UTC : 1997-309 // 23:41:01.069
SCLK: 1/04205021:89:0:0

Frame : 5

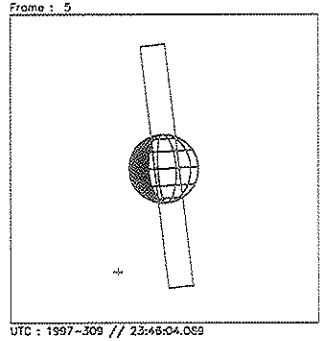

UTC : 1997-309 // 23:46:04.069
SCLK: 1/04205026:88:5:0

Frame : 6

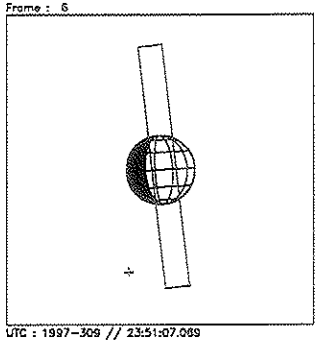

UTC : 1997-309 // 23:51:07.069
SCLK: 1/04205031:88:0:0

Frame : 7

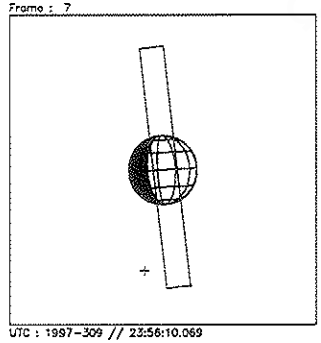

UTC : 1997-309 // 23:56:10.069
SCLK: 1/04205036:87:5:0

Frame : 8

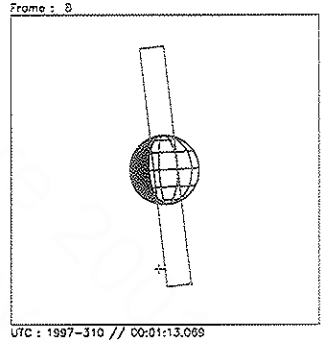

UTC : 1997-310 // 00:01:13.069
SCLK: 1/04205041:87:0:0

Start UTC_TIME : 1997-309 // 23:20:49.069
End UTC_TIME : 1997-310 // 00:01:15.734
Start SCLK : 1/04205002:00:0:0
Delta Time between FOV : 303.0000
FOVs : F Channel(0.1x0.4), N/G Channel(0.1x1.0)

Target Body : EUROPA
Target Ra/Dec : 259.21/-24.51 Deg
S/C to Body Center : 653414.5 Km (417.51723 Re)
Z-axis Pointing (Ra / Dec) : 137.25 / 19.00 Deg

Activity ID: Orbit 11 **OAPEL** EUM20HR_ **SeqNo** 01+

Title UVS r/a w/ NIMS Europa Obs Beyond 15 Rj **Instrument** UVS

Requestor UVS-SWG/W. SWEET X30523 **Team** UVS **Working Group** SWG

Time System CDS **Load ID** 11A **Calendar Date** 11/06/97 **Week** 45

Start	EEE-CDS 00001203:00:0	97-310/00:15:30.000	EEE-000/20:16:22.000
End	EEE-CDS 00001183:00:0	97-310/00:35:43.334	EEE-000/19:56:08.666
Duration	00000020:00:0	000/00:20:13.334	000/00:20:13.334

Top Label 11EUM20HR_01+

Bottom Label (ride-along)

Plot Key	UVS	**Type**	SCI		
CDS Bytes	38	**Report Options**	BOTH	**Scan Platform**	No
CDS Source	OAP	**Spin State**	DUAL	**DMS**	No

Observation Objective

11EUM20HR_01+: Ride-along with the NIMS 11EUM20HR_01 observation to observe Europa in the 1600Å to 3200Å wavelength regions at phase angles not obtainable from the Earth. Data will supplement and complement the NIMS surface property measurements.

Rj = 16.9
UVS configuration: F/F full scans

MBTG = (1008 bits/sec) * (300 sec) /1.5 (compression) = 0.202

Design Detail

CDS	RIM	COMMAND	PARAMETERS	PSID
38	000	CMDRS		(157CK)
	004	1	34UVS,07,S,N,N,N,S,0, ON,OFF,OFF, ON,OFF,NOOVR,1,00,9C,00,00	
	012	9	34UVS,C1,F,N,N,N,S,0,OFF,OFF, ON,OFF,OFF,NOOVR,1,2C,05,00,00	

Frame : 0

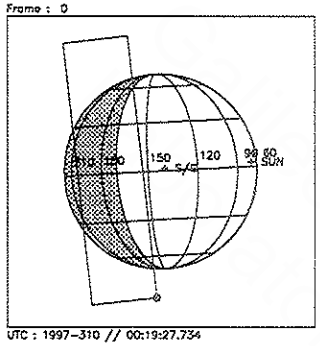

UTC : 1997-310 // 00:19:27.734
SCLK: 1/04205060:00:0:0

Frame : 1

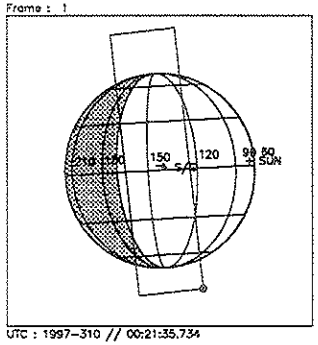

UTC : 1997-310 // 00:21:35.734
SCLK: 1/04205062:10:0:0

Frame : 2

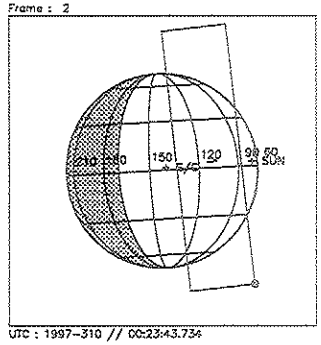

UTC : 1997-310 // 00:23:43.734
SCLK: 1/04205064:20:0:0

Frame : 3

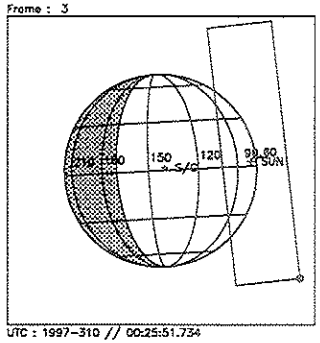

UTC : 1997-310 // 00:25:51.734
SCLK: 1/04205066:30:0:0

Frame : 4

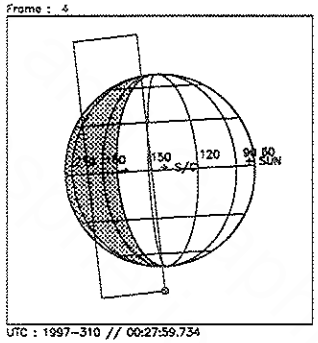

UTC : 1997-310 // 00:27:59.734
SCLK: 1/04205068:40:0:0

Frame : 5

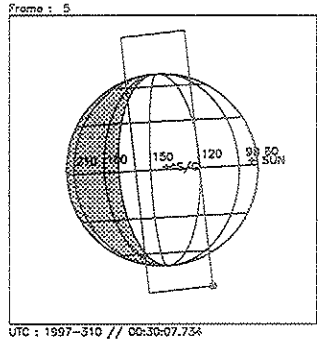

UTC : 1997-310 // 00:30:07.734
SCLK: 1/04205070:50:0:0

Frame : 6

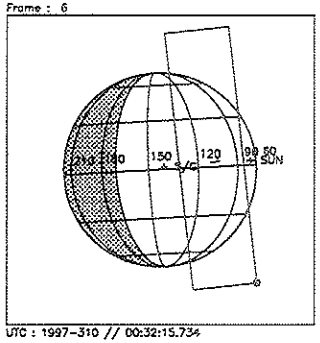

UTC : 1997-310 // 00:32:15.734
SCLK: 1/04205072:60:0:0

Frame : 7

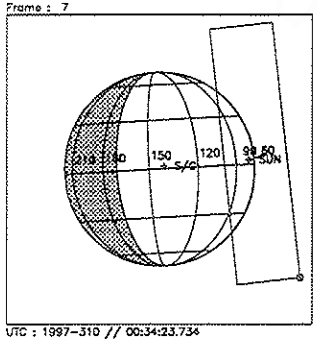

UTC : 1997-310 // 00:34:23.734
SCLK: 1/04205074:70:0:0

Frame : 8

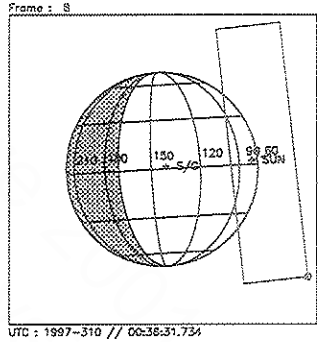

UTC : 1997-310 // 00:36:31.734
SCLK: 1/04205076:80:0:0

Start UTC_TIME : 1997-310 // 00:19:27.734
End UTC_TIME : 1997-310 // 00:36:39.066
Start SCLK : 1/04205060:00:0:0
Delta Time between FOV : 128.0000
FOVs : F Channel(0.1x0.4), N/G Channel(0.1x1.0)

Target Body : EUROPA
Target Ra/Dec : 259.92/-24.55 Deg
S/C to Body Center : 606246.3 Km (387.37783 Re)
Z-axis Pointing (Ra / Dec) : 137.25 / 19.00 Deg

Activity ID: Orbit 11 **OAPEL** EUP17HR_ **SeqNo** 01+

Title UVS r/a w/ NIMS Europa Obs Beyond 15 Rj **Instrument** UVS

Requestor UVS-SWG/W. SWEET X30523 **Team** UVS **Working Group** SWG

Time System CDS **Load ID** 11A **Calendar Date** 11/06/97 **Week** 45

Start	EEE-CDS 00001042:00:0	97-310/02:58:17.334	EEE-000/17:33:34.666
End	EEE-CDS 00001022:00:0	97-310/03:18:30.667	EEE-000/17:13:21.333
Duration	00000020:00:0	000/00:20:13.333	000/00:20:13.333

Top Label 11EUP17HR_01+

Bottom Label (ride-along)

Plot Key	UVS	**Type**	SCI		
CDS Bytes	38	**Report Options**	BOTH	**Scan Platform**	No
CDS Source	OAP	**Spin State**	DUAL	**DMS**	No

Observation Objective

11EUP17HR_01+: Ride-along with the NIMS 11EUP17HR_01 observation to observe Europa in the 1600Å to 3200Å wavelength regions at phase angles not obtainable from the Earth. Data will supplement and complement the NIMS surface property measurements.

Rj = 15.6
UVS configuration: F/F full scans

MBTG = (1008 bits/sec) * (360 sec) /1.5 compression) = 0.242

Design Detail

CDS	RIM	COMMAND	PARAMETERS	PSID
38	000	CMDRS		(157CL)
	004	1	34UVS,07,S,N,N,N,S,0, ON,OFF,OFF, ON,OFF,NOOVR,1,00,9C,00,00	
	013	10	34UVS,C1,F,N,N,N,S,0,OFF,OFF, ON,OFF,OFF,NOOVR,1,2C,05,00,00	

Frame : 0

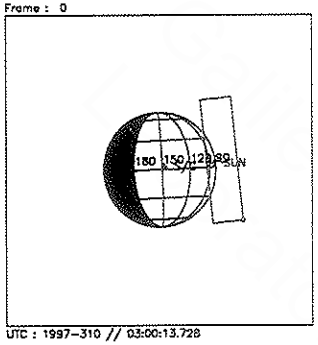

UTC : 1997-310 // 03:00:13.728
SCLK: 1/04205219:00:0:0

Frame : 1

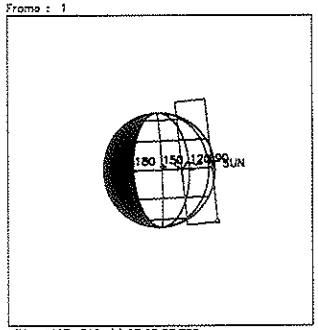

UTC : 1997-310 // 03:02:37.728
SCLK: 1/04205221:34:0:0

Frame : 2

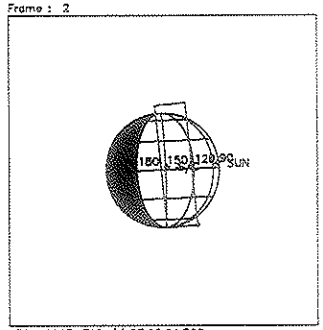

UTC : 1997-310 // 03:05:01.728
SCLK: 1/04205223:68:0:0

Frame : 3

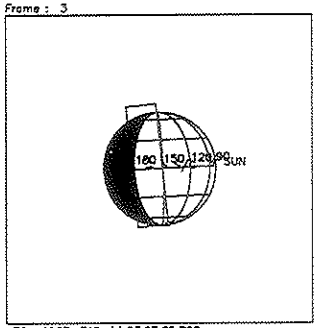

UTC : 1997-310 // 03:07:25.728
SCLK: 1/04205226:11:0:0

Frame : 4

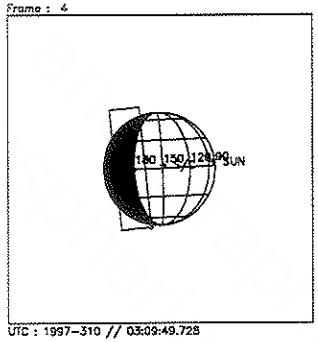

UTC : 1997-310 // 03:09:49.728
SCLK: 1/04205228:45:0:0

Frame : 5

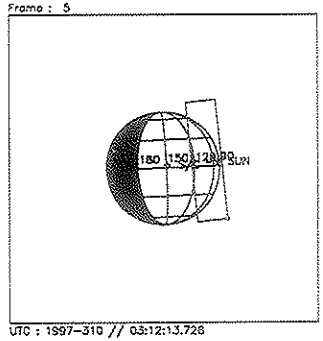

UTC : 1997-310 // 03:12:13.728
SCLK: 1/04205230:79:0:0

Frame : 6

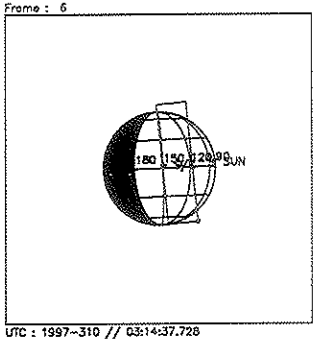

UTC : 1997-310 // 03:14:37.728
SCLK: 1/04205233:22:0:0

Frame : 7

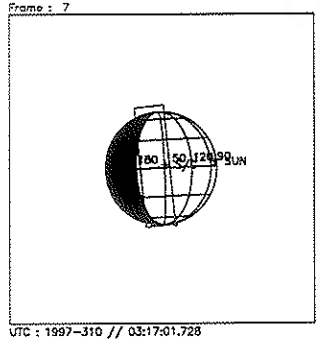

UTC : 1997-310 // 03:17:01.728
SCLK: 1/04205235:56:0:0

Frame : 8

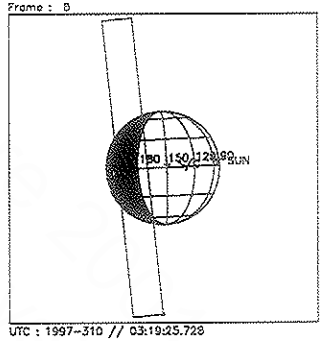

UTC : 1997-310 // 03:19:25.728
SCLK: 1/04205237:90:0:0

Start UTC_TIME : 1997-310 // 03:00:13.728
End UTC_TIME : 1997-310 // 03:19:26.394
Start SCLK : 1/04205219:00:0:0
Delta Time between FOV : 144.0000
FOVs : F Channel(0.1x0.4), N/G Channel(0.1x1.0)

Target Body : EUROPA
Target Ra/Dec : 261.40/-24.60 Deg
S/C to Body Center : 486210.0 Km (310.67730 Re)
Z-axis Pointing (Ra / Dec) : 137.25 / 19.00 Deg

Activity ID: Orbit 11 OAPEL EUM15HR_ SeqNo 01+

Title UVS r/a w/ NIMS Europa Obs at Minus 15 **Instrument** UVS

Requestor UVS-SWG/W. SWEET X30523 **Team** UVS **Working Group** SWG

Time System CDS **Load ID** 11A **Calendar Date** 11/06/97 **Week** 45

Start	EEE-CDS 00000900:00:0	97-310/05:21:52.000	EEE-000/15:10:00.000
End	EEE-CDS 00000876:00:0	97-310/05:46:08.000	EEE-000/14:45:44.000
Duration	00000024:00:0	000/00:24:16.000	000/00:24:16.000

Top Label 11EUM15HR_01+

Bottom Label (ride-along)

Plot Key UVS **Type** SCI

CDS Bytes 38 **Report Options** BOTH **Scan Platform** No

CDS Source OAP **Spin State** DUAL **DMS** No

Observation Objective

11EUM15HR_01+: Ride-along with the NIMS 11EUM15HR_01 observation to observe Europa in the 1600Å to 3200Å wavelength regions at phase angles not obtainable from the Earth. Data will supplement and complement the NIMS surface property measurements.

Rj = 14.5
UVS configuration: F/F full scans

MBTG = (1008 bits/sec) * (450 sec) /1.5 (compression) = 0.302

Design Detail

```
CDS RIM COMMAND PARAMETERS                                  PSID
--- --- ------- ----------                                  ----
38  000 CMDRS                                               (157CM)
    004     1   34UVS,07,S,N,N,N,S,0,  ON,OFF,OFF,  ON,OFF,NOOVR,1,00,9C,00,00
    012     9   34UVS,C1,F,N,N,N,S,0,OFF,OFF,  ON,OFF,OFF,NOOVR,1,2C,05,00,00
```

Frame : 0

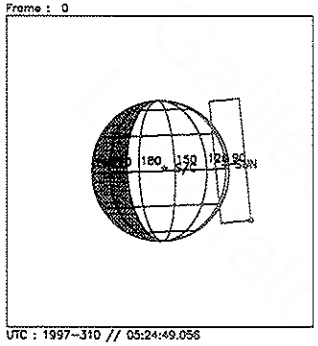

UTC : 1997-310 // 05:24:49.056
SCLK: 1/04205362:00:0:0

Frame : 1

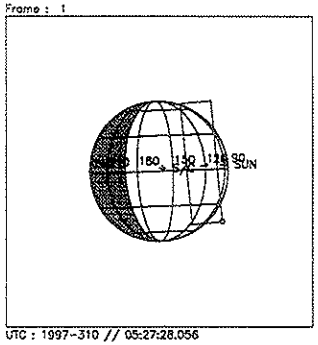

UTC : 1997-310 // 05:27:28.056
SCLK: 1/04205364:56:5:0

Frame : 2

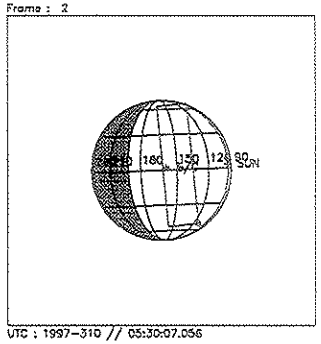

UTC : 1997-310 // 05:30:07.056
SCLK: 1/04205367:22:0:0

Frame : 3

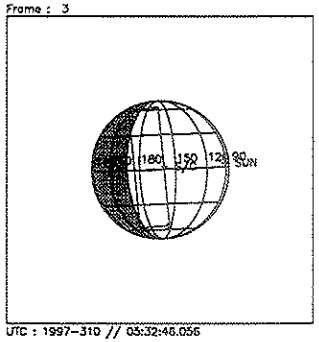

UTC : 1997-310 // 05:32:46.056
SCLK: 1/04205369:78:5:0

Frame : 4

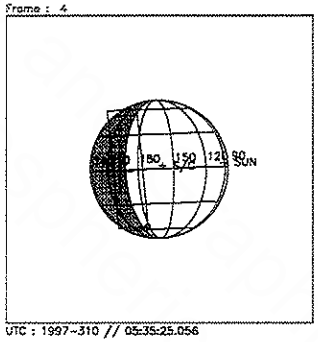

UTC : 1997-310 // 05:35:25.056
SCLK: 1/04205372:44:0:0

Frame : 5

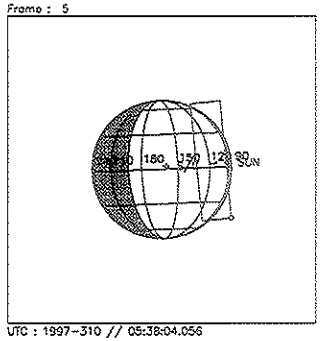

UTC : 1997-310 // 05:38:04.056
SCLK: 1/04205375:09:5:0

Frame : 6

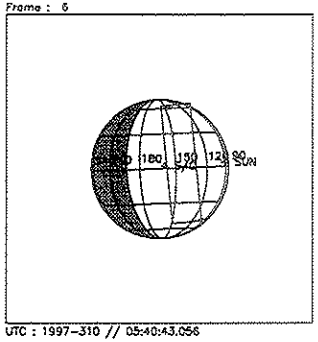

UTC : 1997-310 // 05:40:43.056
SCLK: 1/04205377:66:0:0

Frame : 7

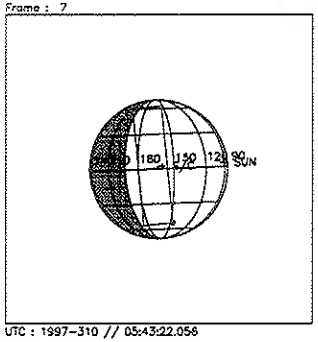

UTC : 1997-310 // 05:43:22.056
SCLK: 1/04205380:31:5:0

Frame : 8

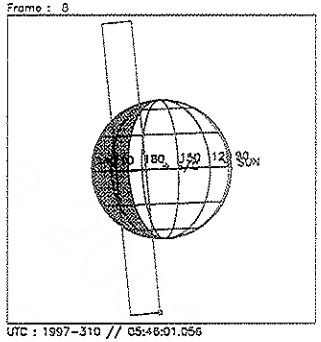

UTC : 1997-310 // 05:46:01.056
SCLK: 1/04205382:88:0:0

Start UTC_TIME : 1997-310 // 05:24:49.056
End UTC_TIME : 1997-310 // 05:46:03.055
Start SCLK : 1/04205362:00:0:0
Delta Time between FOV : 159.0000
FOVs : F Channel(0.1x0.4), N/G Channel(0.1x1.0)

Target Body : EUROPA
Target Ra/Dec : 262.04/-24.63 Deg
S/C to Body Center : 390399.7 Km (249.45667 Re)
Z-axis Pointing (Ra / Dec) : 137.25 / 19.00 Deg

Activity ID: Orbit 11 **OAPEL** EUEUDISK **SeqNo** 01-

Title UVS Europa disk-resolved **Instrument** UVS

Requestor UVS-SWG/W. SWEET X30523 **Team** UVS **Working Group** SWG

Time System CDS **Load ID** 11A **Calendar Date** 11/06/97 **Week** 45

Start	EEE-CDS 00000212:00:0	97-310/16:57:31.067	EEE-000/03:34:21.333
End	EEE-CDS 00000169:00:0	97-310/17:40:59.734	EEE-000/02:50:52.666
Duration	00000043:00:0	000/00:43:28.667	000/00:43:28.667

Top Label 11EUEUDISK01-

Bottom Label (real-time)

Plot Key	UVS	**Type**	SCI		
CDS Bytes	571	**Report Options**	BOTH	**Scan Platform**	Yes
CDS Source	OAP	**Spin State**	DUAL	**DMS**	No

Observation Objective

11EUEUDISK01- observation. Real-time disk-resolved Europa observation. 3 rims per position.

UVS configuration: F/F full scans
Rj = 10.2

MBTG = 10 flushes * 17712 bits/flush = 0.177

Design Detail

```
CDS RIM COMMAND PARAMETERS                                          PSID
--- --- ------- ----------                                          ----
0   000 COMMENT UVS RIM 0                                           (384CJ)
28  003+UVFLUSH DISCRD,UVS                                          (349CS)
38  003 CMDRS                                                       (157CN)
    004     1   34UVS,07,S,N,N,N,S,0,  ON,OFF,OFF,  ON,OFF,NOOVR,1,00,9C,00,00
    051     48  34UVS,C1,F,N,N,N,S,0,OFF,OFF,  ON,OFF,OFF,NOOVR,1,2C,05,00,00
54  004 TARGET  with TMC on body                                    (165CL)
28  006+UVFLUSH PACKET,UVS                                          (349CT)
19  007 SUB-TARGET                                                  (116CP)
28  010+UVFLUSH PACKET,UVS                                          (349CU)
19  011 SUB-TARGET                                                  (116CQ)
28  014+UVFLUSH PACKET,UVS                                          (349CV)
19  015 SUB-TARGET                                                  (116CR)
28  018+UVFLUSH PACKET,UVS                                          (349CW)
19  019 SUB-TARGET                                                  (116CS)
28  022+UVFLUSH PACKET,UVS                                          (349CX)
19  023 SUB-TARGET                                                  (116CT)
28  026+UVFLUSH PACKET,UVS                                          (349CY)
19  027 SUB-TARGET                                                  (116CU)
28  030+UVFLUSH PACKET,UVS                                          (349CZ)
```

Frame : 0

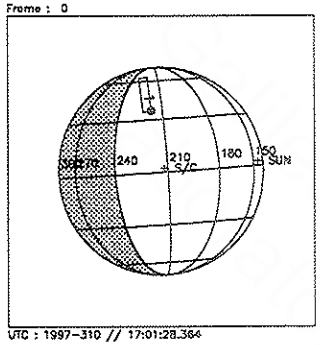

UTC : 1997-310 // 17:01:28.364
SCLK: 1/04206051:00:0:0

Frame : 1

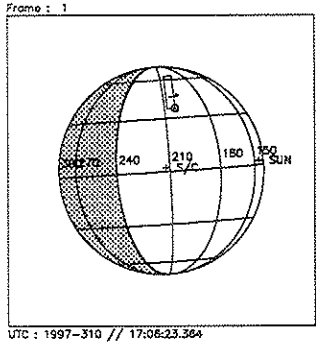

UTC : 1997-310 // 17:06:23.364
SCLK: 1/04206055:78:5:0

Frame : 2

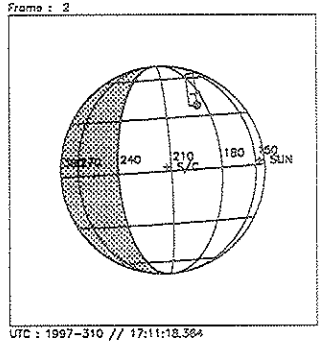

UTC : 1997-310 // 17:11:18.364
SCLK: 1/04206060:66:0:0

Frame : 3

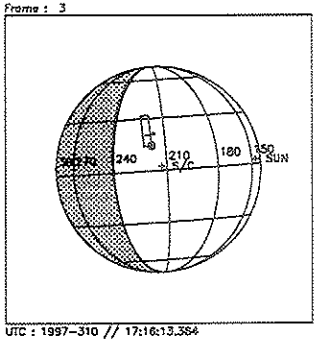

UTC : 1997-310 // 17:16:13.364
SCLK: 1/04206065:53:5:0

Frame : 4

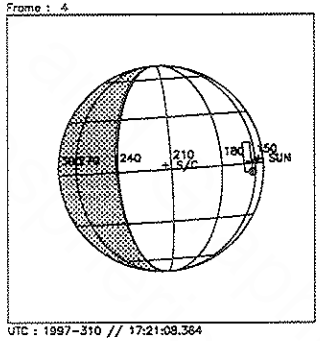

UTC : 1997-310 // 17:21:08.364
SCLK: 1/04206070:41:0:0

Frame : 5

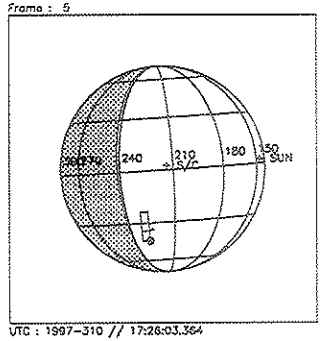

UTC : 1997-310 // 17:26:03.364
SCLK: 1/04206075:28:5:0

Frame : 6

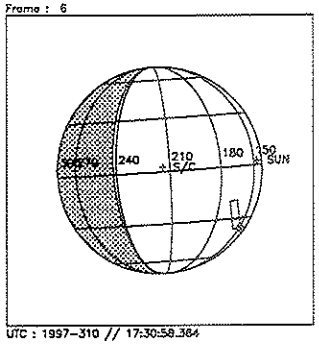

UTC : 1997-310 // 17:30:58.364
SCLK: 1/04206080:16:0:0

Frame : 7

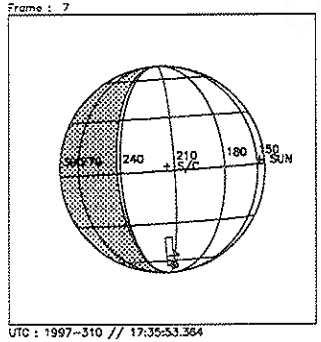

UTC : 1997-310 // 17:35:53.364
SCLK: 1/04206085:03:5:0

Frame : 8

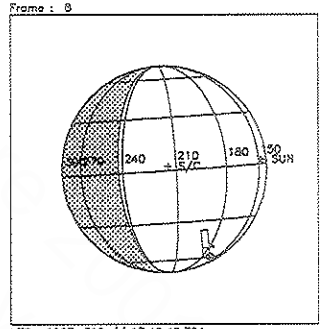

UTC : 1997-310 // 17:40:48.364
SCLK: 1/04206089:82:0:0

Start UTC_TIME : 1997-310 // 17:01:28.364
End UTC_TIME : 1997-310 // 17:40:54.363
Start SCLK : 1/04206051:00:0:0
Delta Time between FOV : 295.0000
FOVs : F Channel(0.1x0.4), N/G Channel(0.1x1.0)

Target Body : EUROPA
Target Ra/Dec : 258.65/-25.34 Deg
S/C to Body Center : 72000.39 Km (46.006641 Re)
Z-axis Pointing (Ra / Dec) : 137.25 / 19.00 Deg

Activity ID: Orbit 11 OAPEL EUDRKLIT SeqNo 01+

Title UVS r/a w/ NIMS Europa Dark Mosaic **Instrument** UVS

Requestor UVS-SWG/W. SWEET X30523 **Team** UVS **Working Group** SWG

Time System CDS **Load ID** 11A **Calendar Date** 11/06/97 Week 45

Start	EEE-CDS 00000102:00:0	97-310/18:48:44.000	EEE-000/01:43:08.000
End	EEE-CDS 00000088:00:0	97-310/19:02:53.334	EEE-000/01:28:58.666
Duration	00000014:00:0	000/00:14:09.334	000/00:14:09.334

Top Label 11EUDRKLIT01+

Bottom Label (ride-along)

Plot Key UVS **Type** SCI

CDS Bytes 38 **Report Options** BOTH **Scan Platform** No

CDS Source OAP **Spin State** DUAL **DMS** No

Observation Objective

11EUDRKLIT01+: Ride-along with the NIMS 11EUDRKLIT01 observation to observe crater on the lit side of Europa in the 1600Å to 3200Å wavelength regions at phase angles not obtainable from the Earth. Data will supplement and complement the NIMS surface property measurements.

Rj = 9.7
UVS configuration: F/F full scans

MBTG = (1008 bits/sec) * (750 sec) * 0.3 (compression) = 0.227

Design Detail

```
CDS  RIM  COMMAND  PARAMETERS                                          PSID
---  ---  -------  ----------                                          ----
38   000  CMDRS                                                       (157CO)
     001      1    34UVS,07,S,N,N,N,S,0,  ON,OFF,OFF,  ON,OFF,NOOVR,1,00,9C,00,00
     013     13    34UVS,C1,F,N,N,N,S,0,OFF,OFF,  ON,OFF,OFF,NOOVR,1,2C,05,00,00
```

Frame : 0

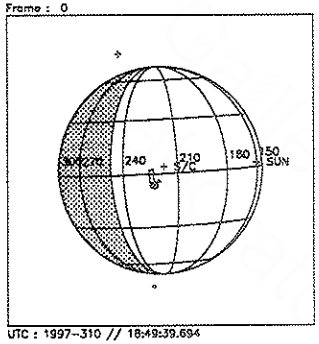

UTC : 1997-310 // 18:49:39.694
SCLK: 1/04206158:00:0:0

Frame : 1

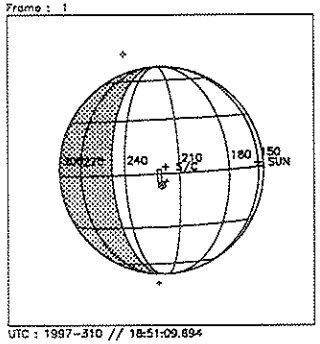

UTC : 1997-310 // 18:51:09.694
SCLK: 1/04206159:44:0:0

Frame : 2

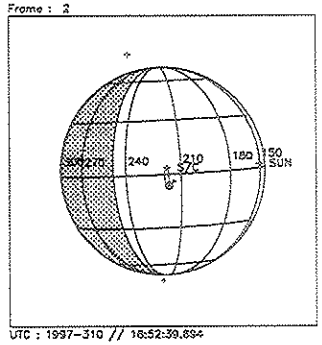

UTC : 1997-310 // 18:52:39.694
SCLK: 1/04206160:88:0:0

Frame : 3

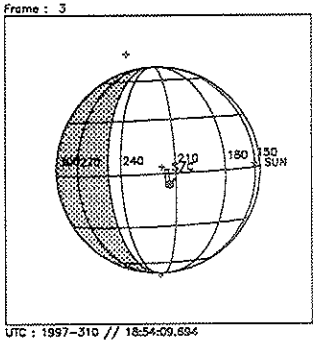

UTC : 1997-310 // 18:54:09.694
SCLK: 1/04206162:41:0:0

Frame : 4

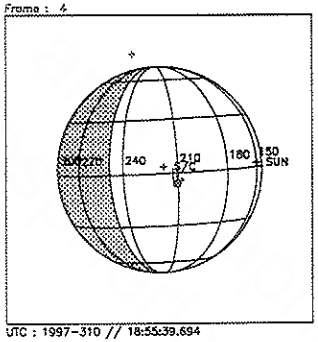

UTC : 1997-310 // 18:55:39.694
SCLK: 1/04206163:85:0:0

Frame : 5

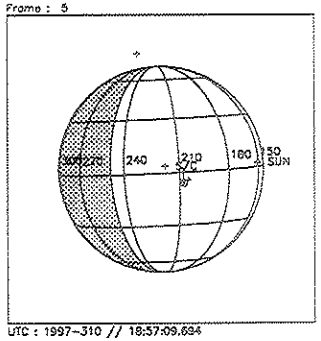

UTC : 1997-310 // 18:57:09.694
SCLK: 1/04206165:38:0:0

Frame : 6

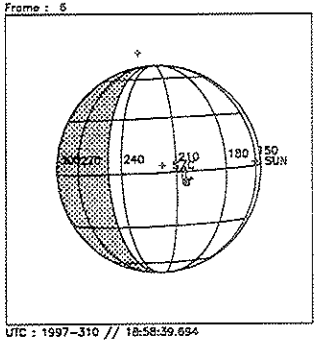

UTC : 1997-310 // 18:58:39.694
SCLK: 1/04206166:82:0:0

Frame : 7

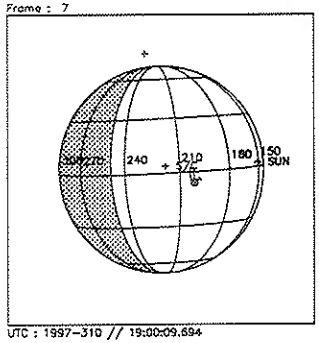

UTC : 1997-310 // 19:00:09.694
SCLK: 1/04206168:35:0:0

Frame : 8

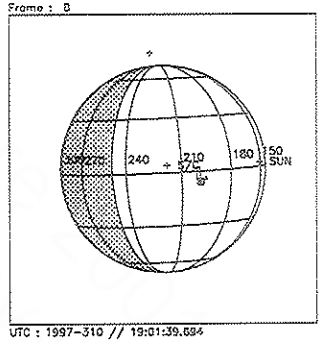

UTC : 1997-310 // 19:01:39.694
SCLK: 1/04206169:79:0:0

Start UTC_TIME : 1997-310 // 18:49:39.694
End UTC_TIME : 1997-310 // 19:01:47.693
Start SCLK : 1/04206158:00:0:0
Delta Time between FOV : 90.00000
FOVs : F Channel(0.1x0.4), N/G Channel(0.1x1.0)

Target Body : EUROPA
Target Ra/Dec : 260.95/-26.81 Deg
S/C to Body Center : 34915.57 Km (22.310270 Re)
Z-axis Pointing (Ra / Dec) : 137.25 / 19.00 Deg

Activity ID: Orbit 11 **OAPEL** EUEURORT **SeqNo** 01+

Title UVS r/a w/ NIMS Europa Real-Time Obs. **Instrument** UVS

Requestor UVS-SWG/W. SWEET X30523 **Team** UVS **Working Group** SWG

Time System CDS **Load ID** 11A **Calendar Date** 11/06/97 **Week** 45

Start	EEE-CDS 00000075:00:0	97-310/19:16:02.000	EEE-000/01:15:50.000
End	EEE-CDS 00000070:00:0	97-310/19:21:05.334	EEE-000/01:10:46.666
Duration	00000005:00:0	000/00:05:03.334	000/00:05:03.334

Top Label 11EUEURORT01+

Bottom Label (real-time)

Plot Key UVS **Type** SCI

CDS Bytes 94 **Report Options** BOTH **Scan Platform** Yes

CDS Source OAP **Spin State** DUAL **DMS** No

Observation Objective

11EUEURORT01+: Ride-along with the NIMS 11EUEURORT01 observation to observe Europa in the 1600Å to 3200Å wavelength regions at phase angles not obtainable from the Earth. Data will supplement and complement the NIMS surface property measurements.
Real-time.

UVS configuration: F/F full scans
Rj = 19.6

MBTG = 1 flush * 17712 bits/flush = 0.018

Design Detail

```
CDS  RIM  COMMAND  PARAMETERS                                    PSID
---  ---  -------  ----------                                    ----
28   001+UVFLUSH  DISCRD,UVS                                    (349DF)
38   000  CMDRS                                                 (157CP)
     001      1   34UVS,07,S,N,N,N,S,0,  ON,OFF,OFF,  ON,OFF,NOOVR,1,00,9C,00,00
     005      5   34UVS,C1,F,N,N,N,S,0,OFF,OFF,  ON,OFF,OFF,NOOVR,1,2C,05,00,00
28   004+UVFLUSH  PACKET,UVS                                    (349DG)
```

Frame : 0

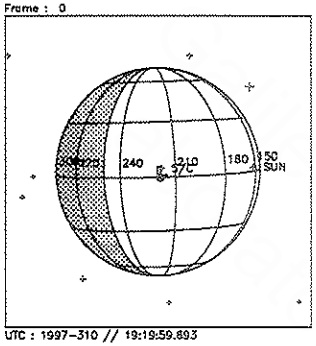

UTC : 1997-310 // 19:19:59.693
SCLK: 1/04206188:00:0:0

Frame : 1

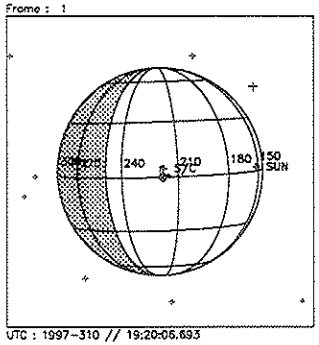

UTC : 1997-310 // 19:20:06.693
SCLK: 1/04206188:10:5:0

Frame : 2

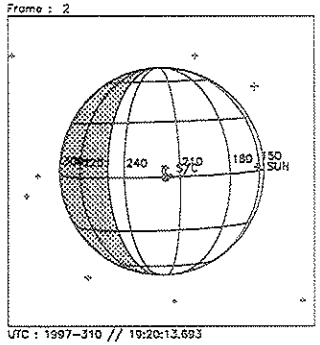

UTC : 1997-310 // 19:20:13.693
SCLK: 1/04206188:21:0:0

Frame : 3

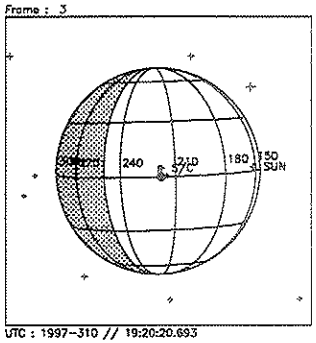

UTC : 1997-310 // 19:20:20.693
SCLK: 1/04206188:31:5:0

Frame : 4

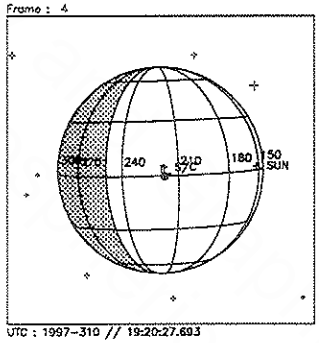

UTC : 1997-310 // 19:20:27.693
SCLK: 1/04206188:42:0:0

Frame : 5

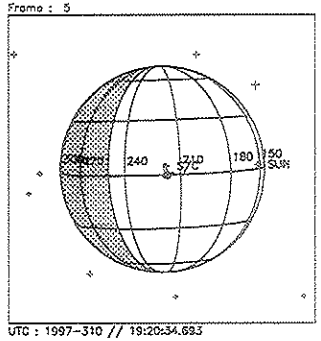

UTC : 1997-310 // 19:20:34.693
SCLK: 1/04206188:52:5:0

Frame : 6

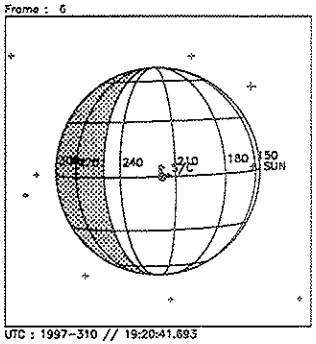

UTC : 1997-310 // 19:20:41.693
SCLK: 1/04206188:63:0:0

Frame : 7

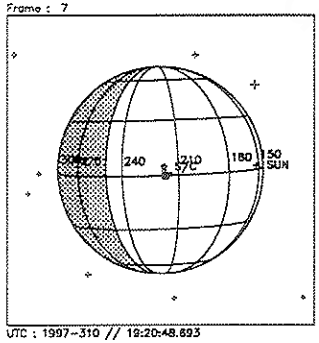

UTC : 1997-310 // 19:20:48.693
SCLK: 1/04206188:73:5:0

Frame : 8

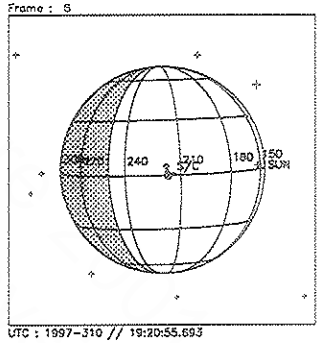

UTC : 1997-310 // 19:20:55.693
SCLK: 1/04206188:84:0:0

Start UTC_TIME : 1997-310 // 19:19:59.693
End UTC_TIME : 1997-310 // 19:21:00.359
Start SCLK : 1/04206188:00:0:0
Delta Time between FOV : 7.000000
FOVs : F Channel(0.1x0.4), N/G Channel(0.1x1.0)

Target Body : EUROPA
Target Ra/Dec : 263.36/-27.97 Deg
S/C to Body Center : 24670.35 Km (15.763803 Re)
Z-axis Pointing (Ra / Dec) : 137.25 / 19.00 Deg

Activity ID: Orbit 11 **OAPEL** EUCYCLOD **SeqNo** 01+

Title UVS r/a w/ NIMS Europa Cyclodial Observa **Instrument** UVS

Requestor UVS-SWG/W. SWEET X30523 **Team** UVS **Working Group** SWG

Time System CDS **Load ID** 11A **Calendar Date** 11/06/97 **Week** 45

Start	EEE-CDS 00000065:00:0	97-310/19:26:08.667	EEE-000/01:05:43.333
End	EEE-CDS 00000048:00:0	97-310/19:43:20.000	EEE-000/00:48:32.000
Duration	00000017:00:0	000/00:17:11.333	000/00:17:11.333

Top Label 11EUCYCLOD01+

Bottom Label (ride-along)

Plot Key UVS **Type** SCI

CDS Bytes 38 **Report Options** BOTH **Scan Platform** No

CDS Source OAP **Spin State** DUAL **DMS** No

Observation Objective

11EUCYCLOD01+: Ride-along with the NIMS 11EUCYCLOD01 observation to observe Europa in the 1600Å to 3200Å wavelength regions at phase angles not obtainable from the Earth. Data will supplement and complement the NIMS surface property measurements.

Rj = 9.5
UVS configuration: F/F full scans

MBTG = (1008 bits/sec) * (720 sec) * 0.3 (compression) = 0.218

Design Detail

```
CDS  RIM  COMMAND  PARAMETERS                                    PSID
---  ---  -------  ----------                                    ----
38   000  CMDRS                                                  (157CQ)
     001      1    34UVS,07,S,N,N,N,S,0,  ON,OFF,OFF,  ON,OFF,NOOVR,1,00,9C,00,00
     013     13    34UVS,C1,F,N,N,N,S,0,OFF,OFF,  ON,OFF,OFF,NOOVR,1,2C,05,00,00
```

Frame : 0

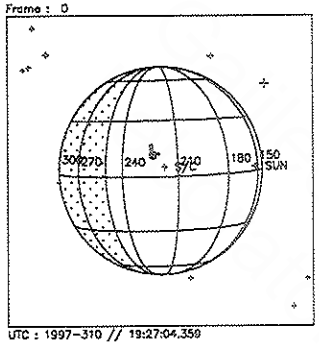

UTC : 1997-310 // 19:27:04.359
SCLK: 1/04206195:00:0:0

Frame : 1

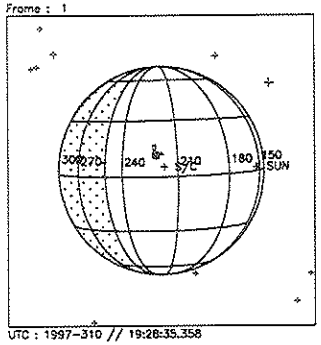

UTC : 1997-310 // 19:28:35.358
SCLK: 1/04206196:45:5:0

Frame : 2

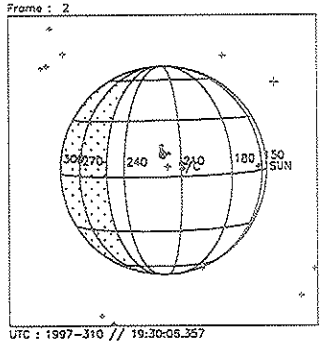

UTC : 1997-310 // 19:30:05.357
SCLK: 1/04206198:00:0:0

Frame : 3

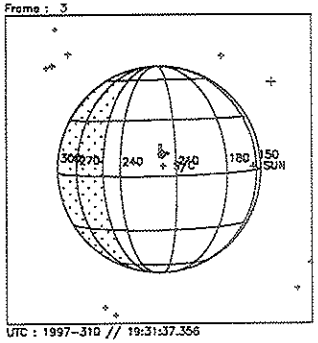

UTC : 1997-310 // 19:31:37.356
SCLK: 1/04206199:45:5:0

Frame : 4

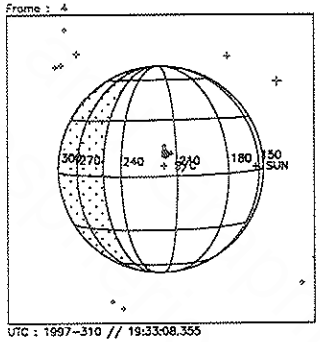

UTC : 1997-310 // 19:33:08.355
SCLK: 1/04206201:00:0:0

Frame : 5

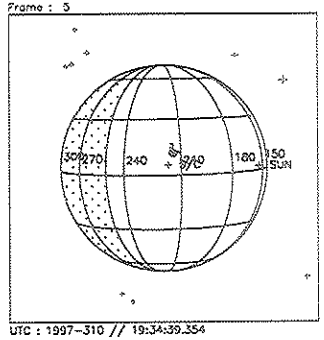

UTC : 1997-310 // 19:34:39.354
SCLK: 1/04206202:45:4:7

Frame : 6

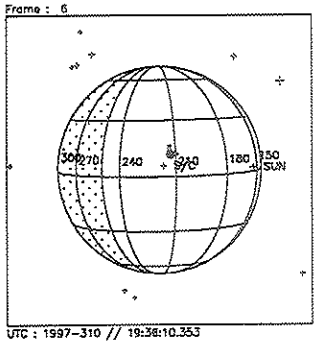

UTC : 1997-310 // 19:36:10.353
SCLK: 1/04206203:90:9:7

Frame : 7

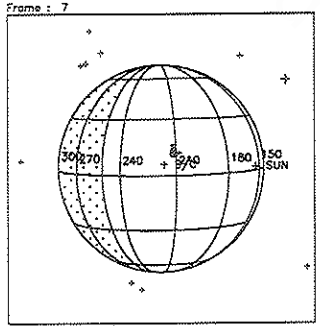

UTC : 1997-310 // 19:37:41.352
SCLK: 1/04206205:45:4:7

Frame : 8

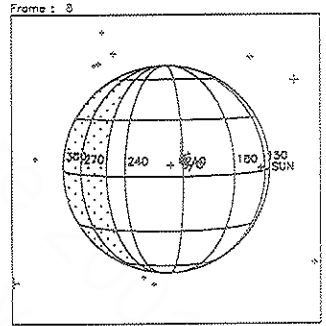

UTC : 1997-310 // 19:39:12.351
SCLK: 1/04206206:90:9:7

Start UTC_TIME : 1997-310 // 19:27:04.359
End UTC_TIME : 1997-310 // 19:39:12.359
Start SCLK : 1/04206195:00:0:0
Delta Time between FOV : 90.99900
FOVs : F Channel(0.1x0.4), N/G Channel(0.1x1.0)

Target Body : EUROPA
Target Ra/Dec : 264.28/-28.39 Deg
S/C to Body Center : 22292.42 Km (14.244356 Re)
Z-axis Pointing (Ra / Dec) : 137.25 / 19.00 Deg

Activity ID: Orbit 11 OAPEL EULEAD__ SeqNo 01-

Title UVS Leading Hemisphere **Instrument** UVS

Requestor UVS-SWG/W. SWEET X30523 **Team** UVS **Working Group** SWG

Time System CDS **Load ID** 11A **Calendar Date** 11/06/97 Week 45

Start	EEE+CDS 00000010:00:0	97-310/20:41:58.666	EEE+000/00:10:06.666
End	EEE+CDS 00000026:00:0	97-310/20:58:09.333	EEE+000/00:26:17.333
Duration	00000016:00:0	000/00:16:10.667	000/00:16:10.667

Top Label 11EULEAD__01-

Bottom Label (real-time)

Plot Key UVS **Type** SCI

CDS Bytes 269 **Report Options** BOTH **Scan Platform** Yes

CDS Source OAP **Spin State** DUAL **DMS** No

Observation Objective

11EULEAD__01- real-time observation. Observe Europa's leading hemisphere at 4 latitudes, +60, +30, 0, -30. Target with TMC, one CSMOS. NIMS will ride-along.

UVS configuration: F/F full scans
Rj = 9.2

MBTG = 4 flushes * 17712 bits/flush = 0.071

Design Detail

```
CDS  RIM  COMMAND  PARAMETERS                                              PSID
---  ---  -------  ----------                                              ----
0    000  COMMENT  UVS RIM 0                                               (384CK)
28   000+UVFLUSH  DISCRD,UVS                                              (349DH)
38   000  CMDRS                                                           (157CR)
     001      1   34UVS,07,S,N,N,N,S,0,  ON,OFF,OFF,  ON,OFF,NOOVR,1,00,9C,00,00
     016     16   34UVS,C1,F,N,N,N,S,0,OFF,OFF,  ON,OFF,OFF,NOOVR,1,2C,05,00,00
54   001  TARGET with TMC                                                 (165CM)
37   001  CSMOS    (3-position, 3-slews)                                  (117CA)
28   003+UVFLUSH  PACKET,UVS                                              (349CQ)
28   007+UVFLUSH  PACKET,UVS                                              (349DI)
28   011+UVFLUSH  PACKET,UVS                                              (349DJ)
28   015+UVFLUSH  PACKET,UVS                                              (349DK)
```

Frame : 0

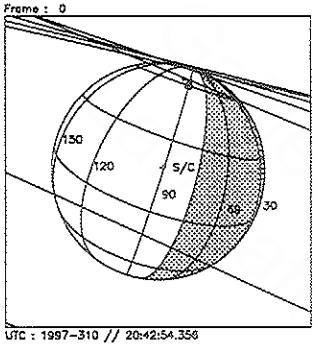

UTC : 1997-310 // 20:42:54.356
SCLK: 1/04206270:00:0:0

Frame : 1

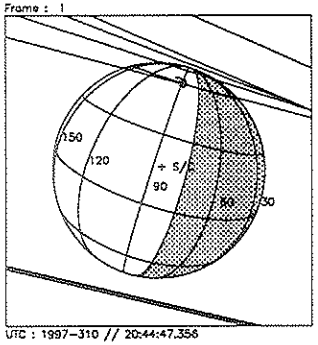

UTC : 1997-310 // 20:44:47.356
SCLK: 1/04206271:78:5:0

Frame : 2

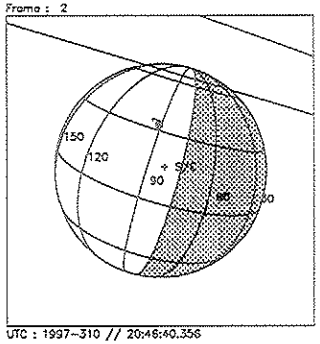

UTC : 1997-310 // 20:46:40.356
SCLK: 1/04206273:66:0:0

Frame : 3

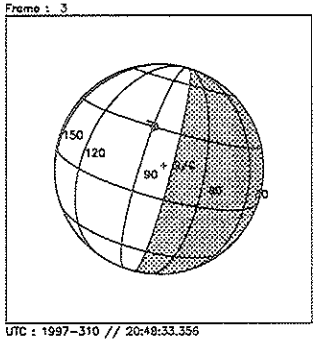

UTC : 1997-310 // 20:48:33.356
SCLK: 1/04206275:53:5:0

Frame : 4

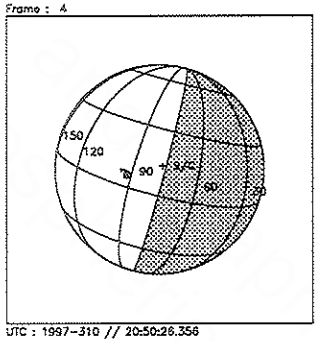

UTC : 1997-310 // 20:50:26.356
SCLK: 1/04206277:41:0:0

Frame : 5

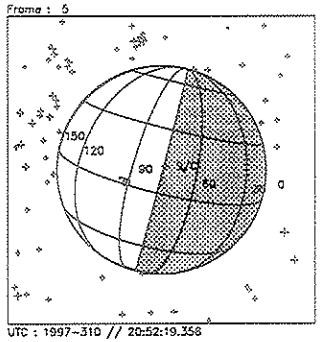

UTC : 1997-310 // 20:52:19.356
SCLK: 1/04206279:28:5:0

Frame : 6

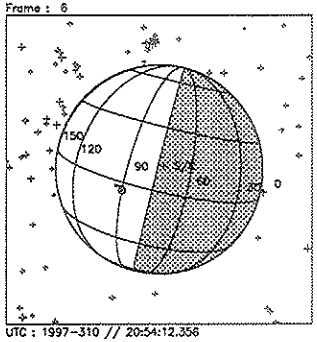

UTC : 1997-310 // 20:54:12.356
SCLK: 1/04206281:16:0:0

Frame : 7

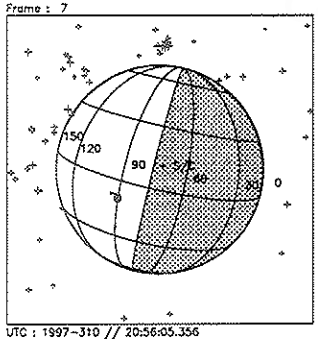

UTC : 1997-310 // 20:56:05.356
SCLK: 1/04206283:03:5:0

Frame : 8

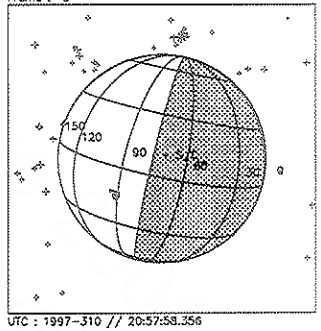

UTC : 1997-310 // 20:57:58.356
SCLK: 1/04206284:82:0:0

Start UTC_TIME : 1997-310 // 20:42:54.356
End UTC_TIME : 1997-310 // 20:58:04.356
Start SCLK : 1/04206270:00:0:0
Delta Time between FOV : 113.0000
FOVs : F Channel(0.1x0.4), N/G Channel(0.1x1.0)

Target Body : EUROPA
Target Ra/Dec : 40.37/ 0.05 Deg
S/C to Body Center : 5285.934 Km (3.3775938 Re)
Z-axis Pointing (Ra / Dec) : 137.25 / 19.00 Deg

Activity ID: Orbit 11 **OAPEL** GUPHAS00 **SeqNo** 01-

Title UVS Ganymede Phase 0 **Instrument** UVS

Requestor UVS-SWG/W. SWEET X30523 **Team** UVS **Working Group** SWG

Time System CDS **Load ID** 11A **Calendar Date** 11/07/97 **Week** 45

Start	JEE+CDS 00000229:00:0	97-311/04:33:09.332	JEE+000/03:51:32.666
End	JEE+CDS 00000273:00:0	97-311/05:17:38.666	JEE+000/04:36:02.000
Duration	00000044:00:0	000/00:44:29.334	000/00:44:29.334

Top Label 11GUPHAS0001-

Bottom Label (real-time)

Plot Key	UVS	**Type**	SCI		
CDS Bytes	148	**Report Options**	BOTH	**Scan Platform**	Yes
CDS Source	OAP	**Spin State**	DUAL	**DMS**	No

Observation Objective

11GUPHAS0001- observation. Observe Ganymede at ~342° longitude and ~0° phase angle.
Target with TMC.

UVS configuration: F/F full scans
Rj = 9.3

MBTG = 1 flush * 17712 bits/flush = 0.018

Design Detail

```
CDS RIM COMMAND PARAMETERS                                  PSID
--- --- ------- ----------                                  ----
0   000 COMMENT UVS RIM 0                                   (384CM)
28  003+UVFLUSH DISCRD,UVS                                  (349DN)
38  003 CMDRS                                               (157CT)
    004     1   34UVS,07,S,N,N,N,S,0,  ON,OFF,OFF,  ON,OFF,NOOVR,1,00,9C,00,00
    044     41  34UVS,C1,F,N,N,N,S,0,OFF,OFF,  ON,OFF,OFF,NOOVR,1,2C,05,00,00
54  004 TARGET  with TMC on body                            (165CO)
28  043+UVFLUSH PACKET,UVS                                  (349DO)
```

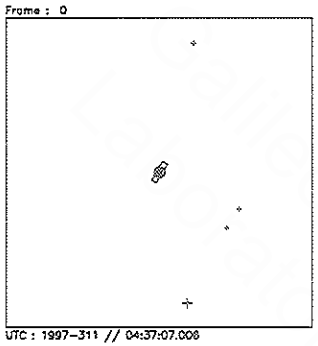
Frame : 0
UTC : 1997-311 // 04:37:07.006
SCLK: 1/04206739:00:0:0

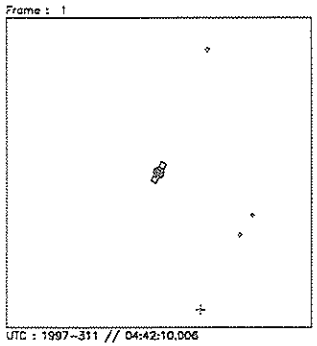
Frame : 1
UTC : 1997-311 // 04:42:10.006
SCLK: 1/04206743:90:5:0

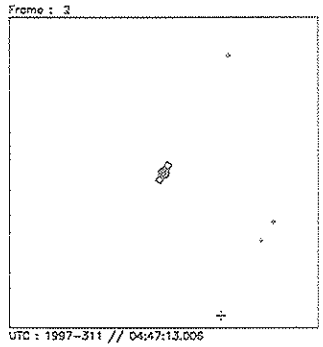
Frame : 2
UTC : 1997-311 // 04:47:13.006
SCLK: 1/04206748:90:0:0

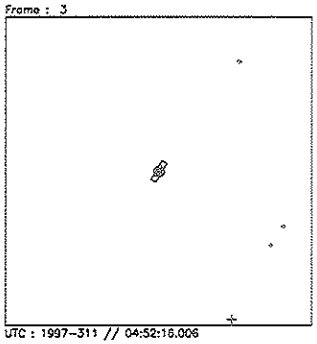
Frame : 3
UTC : 1997-311 // 04:52:16.006
SCLK: 1/04206753:89:5:0

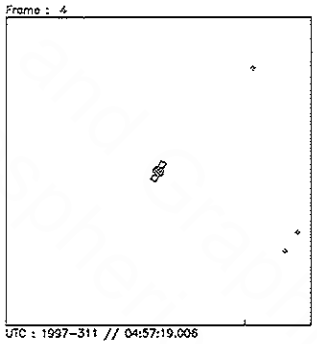
Frame : 4
UTC : 1997-311 // 04:57:19.006
SCLK: 1/04206758:89:0:0

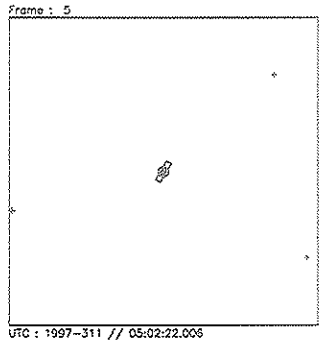
Frame : 5
UTC : 1997-311 // 05:02:22.006
SCLK: 1/04206763:88:5:0

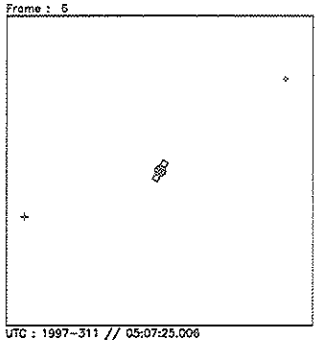
Frame : 6
UTC : 1997-311 // 05:07:25.006
SCLK: 1/04206768:88:0:0

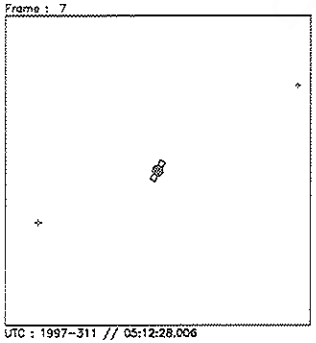
Frame : 7
UTC : 1997-311 // 05:12:28.006
SCLK: 1/04206773:87:5:0

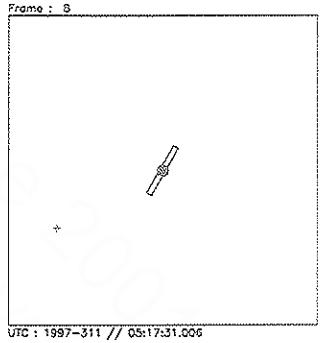
Frame : 8
UTC : 1997-311 // 05:17:31.006
SCLK: 1/04206778:87:0:0

Start UTC_TIME : 1997-311 // 04:37:07.006
End UTC_TIME : 1997-311 // 05:17:33.871
Start SCLK : 1/04206739:00:0:0
Delta Time between FOV : 303.0000
FOVs : F Channel(0.1x0.4), N/G Channel(0.1x1.0)

Target Body : GANYMEDE
Target Ra/Dec : 326.60/-13.96 Deg
S/C to Body Center : 1570610. Km (596.28334 Rg)
Z-axis Pointing (Ra / Dec) : 137.25 / 19.00 Deg

Activity ID: Orbit 11 **OAPEL** GUGADARK **SeqNo** 01-

Title UVS Ganymede Eclipse observation 1 **Instrument** UVS

Requestor UVS-SWG/W. SWEET X30523 **Team** UVS **Working Group** SWG

Time System CDS **Load ID** 11A **Calendar Date** 11/07/97 **Week** 45

Start	JEE+CDS 00000752:00:0	97-311/13:21:57.999	JEE+000/12:40:21.333
End	JEE+CDS 00000779:00:0	97-311/13:49:15.999	JEE+000/13:07:39.333
Duration	00000027:00:0	000/00:27:18.000	000/00:27:18.000

Top Label 11GUGADARK01-

Bottom Label (real-time)

Plot Key	UVS	**Type**	SCI		
CDS Bytes	148	**Report Options**	BOTH	**Scan Platform**	Yes
CDS Source	OAP	**Spin State**	DUAL	**DMS**	No

Observation Objective

11GUGADARK01- observation. Observe Ganymede in total eclipse.
Observe abundance of OH.
Target with TMC.

UVS configuration: F/F 33-step 3090Å mini-scans
Rj = 11.5

MBTG = 1 flush * 17712 bits/flush = 0.018

Design Detail

```
CDS  RIM  COMMAND  PARAMETERS                                          PSID
---  ---  -------  ----------                                          ----
0    000  COMMENT  UVS RIM 0                                          (384CN)
28   003+UVFLUSH  DISCRD,UVS                                          (349DP)
38   003  CMDRS                                                       (157CU)
     004      1   34UVS,D7,F,N,N,N,S,0,  ON,OFF,OFF,  ON,OFF,NOOVR,1,D0,5D,00,00
     027     24   34UVS,C1,F,N,N,N,S,0,OFF,OFF,  ON,OFF,OFF,NOOVR,1,2C,05,00,00
54   004  TARGET   with TMC on body                                    (165CP)
28   026+UVFLUSH  PACKET,UVS                                          (349DQ)
```

Frame : 0

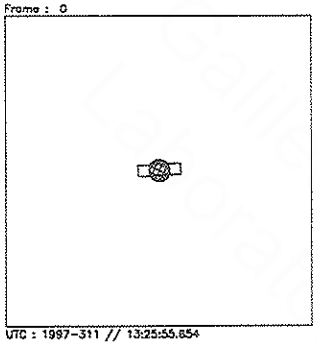

UTC : 1997-311 // 13:25:55.654
SCLK: 1/04207262:00:0:0

Frame : 1

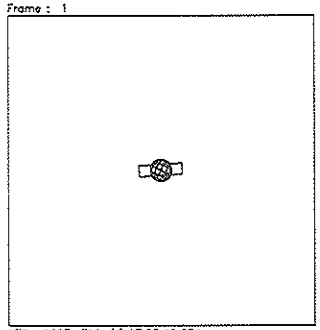

UTC : 1997-311 // 13:28:49.654
SCLK: 1/04207264:79:0:0

Frame : 2

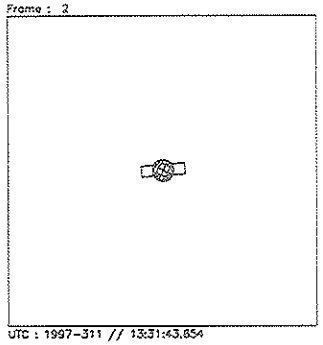

UTC : 1997-311 // 13:31:43.654
SCLK: 1/04207267:67:0:0

Frame : 3

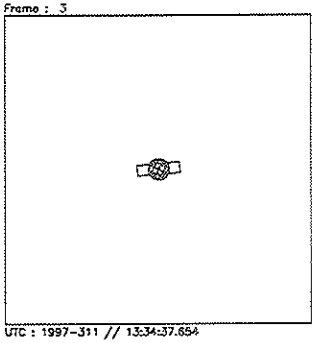

UTC : 1997-311 // 13:34:37.654
SCLK: 1/04207270:55:0:0

Frame : 4

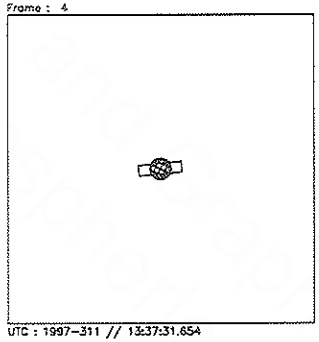

UTC : 1997-311 // 13:37:31.654
SCLK: 1/04207273:43:0:0

Frame : 5

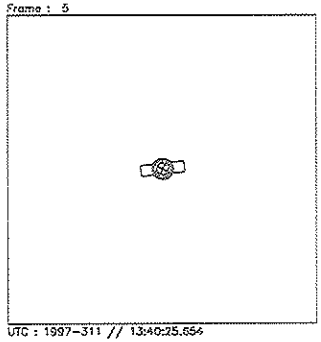

UTC : 1997-311 // 13:40:25.654
SCLK: 1/04207276:31:0:0

Frame : 6

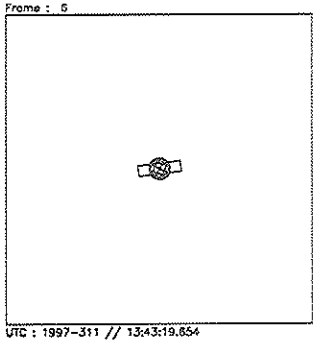

UTC : 1997-311 // 13:43:19.654
SCLK: 1/04207279:19:0:0

Frame : 7

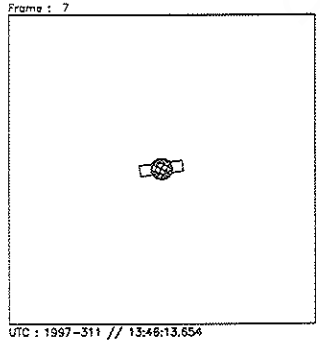

UTC : 1997-311 // 13:46:13.654
SCLK: 1/04207282:07:0:0

Frame : 8

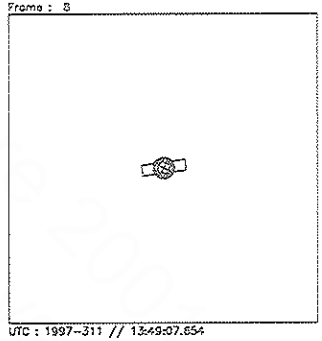

UTC : 1997-311 // 13:49:07.654
SCLK: 1/04207284:86:0:0

Start UTC_TIME : 1997-311 // 13:25:55.654
End UTC_TIME : 1997-311 // 13:49:10.986
Start SCLK : 1/04207262:00:0:0
Delta Time between FOV : 174.0000
FOVs : F Channel(0.1x0.4), N/G Channel(0.1x1.0)

Target Body : GANYMEDE
Target Ra/Dec : 355.19/ -1.46 Deg
S/C to Body Center : 1546495. Km (587.12781 Rg)
Z-axis Pointing (Ra / Dec) : 137.25 / 19.00 Deg

Activity ID: Orbit 11 OAPEL GUGADARK SeqNo 02-

Title UVS Ganymede Eclipse observation 2 **Instrument** UVS

Requestor UVS-SWG/W. SWEET X30523 **Team** UVS **Working Group** SWG

Time System CDS **Load ID** 11A **Calendar Date** 11/07/97 **Week** 45

Start	JEE+CDS 00000824:00:0	97-311/14:34:45.999	JEE+000/13:53:09.333
End	JEE+CDS 00000868:00:0	97-311/15:19:15.332	JEE+000/14:37:38.666
Duration	00000044:00:0	000/00:44:29.333	000/00:44:29.333

Top Label 11GUGADARK02-

Bottom Label (real-time)

Plot Key	UVS	**Type**	SCI		
CDS Bytes	120	**Report Options**	BOTH	**Scan Platform**	Yes
CDS Source	OAP	**Spin State**	DUAL	**DMS**	No

Observation Objective

11GUGADARK02- observation. Observe Ganymede in total eclipse. Target with TMC.

UVS configuration: 1356-1356Å G/G 16-step mini-scan
Rj = 12.3

MBTG = 1 flush * 17712 bits/flush = 0.018

Design Detail

```
CDS RIM COMMAND PARAMETERS                                    PSID
--- --- ------- ----------                                    ----
0   000 COMMENT UVS RIM 0                                     (384CO)
0   003+UVFLUSH DISCRD,UVS <---Omitted to save bytes
38  003 CMDRS                                                 (157CV)
    004     1   34UVS,D1,F,N,N,N,S,0,OFF,OFF,  ON,  ON,OFF,NOOVR,1,B6,45,00,00
    044    41   34UVS,C1,F,N,N,N,S,0,OFF,OFF,  ON,OFF,OFF,NOOVR,1,2C,05,00,00
54  004 TARGET  with TMC on body                              (165CQ)
28  043+UVFLUSH PACKET,UVS                                    (349DS)
```

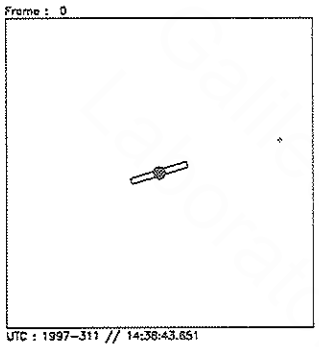

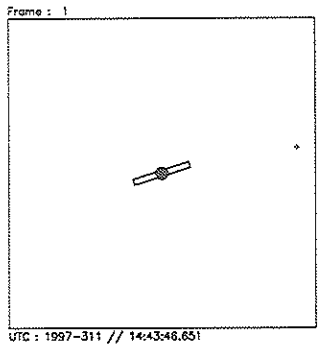

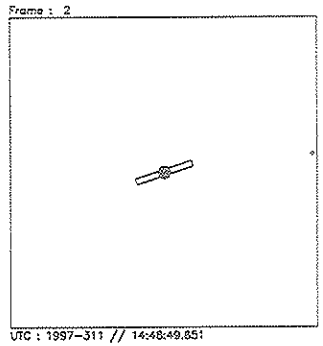

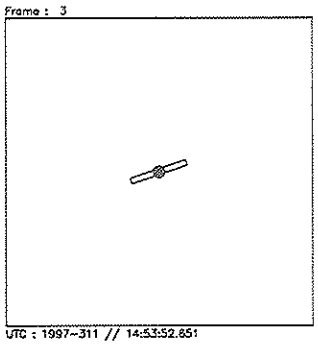

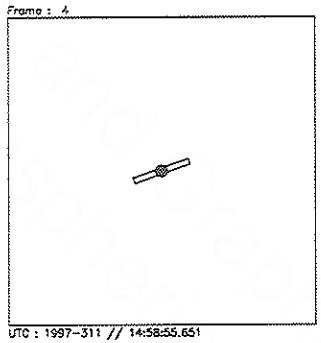

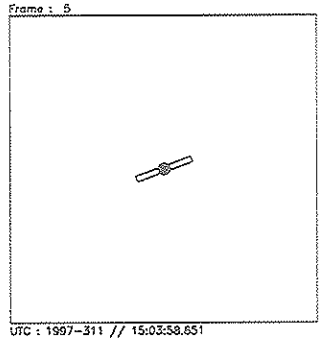

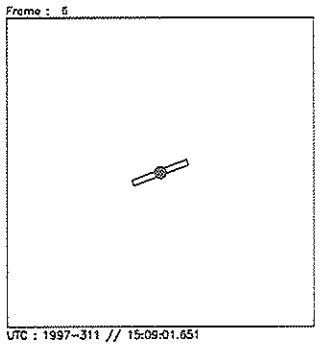

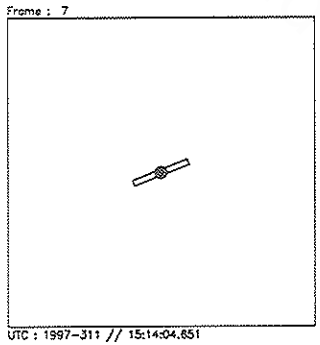

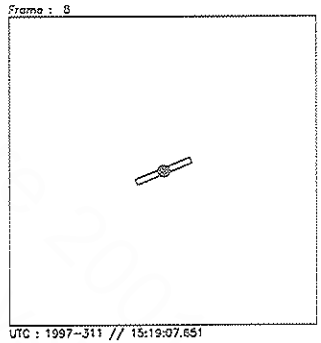

Start UTC_TIME : 1997-311 // 14:38:43.651
End UTC_TIME : 1997-311 // 15:19:10.316
Start SCLK : 1/04207334:00:0:0
Delta Time between FOV : 303.0000
FOVs : F Channel(0.1x0.4), N/G Channel(0.1x1.0)

Target Body : GANYMEDE
Target Ra/Dec : 358.79/ 0.25 Deg
S/C to Body Center : 1556809. Km (591.04361 Rg)
Z-axis Pointing (Ra / Dec) : 137.25 / 19.00 Deg

Activity ID:	Orbit 11	OAPEL	IUPHAS11	SeqNo	31-
Title	UVS Io Phase 113			Instrument	UVS
Requestor	UVS-SWG/W. SWEET X30523	Team	UVS	Working Group	SWG

Time System	CDS	Load ID	11A	Calendar Date	11/07/97	Week	45
Start	IEE-CDS 00000205:00:0		97-311/20:18:32.600		IEE-000/03:27:16.666		
End	IEE-CDS 00000154:00:0		97-311/21:10:06.600		IEE-000/02:35:42.666		
Duration	00000051:00:0		000/00:51:34.000		000/00:51:34.000		

Top Label	11IUPHAS1131-				
Bottom Label	(real-time)				
Plot Key	UVS	Type	SCI		
CDS Bytes	148	Report Options	BOTH	Scan Platform	Yes
CDS Source	OAP	Spin State	DUAL	DMS	No

Observation Objective

11IUPHAS1131- observation. Observe Io at ~112° longitude and ~113° phase angle.
Target with TMC on lit portion of Io.

UVS configuration: F/F full scans
Rj = 14.5

MBTG = 1 flush * 17712 bits/flush = 0.018

Design Detail

```
CDS RIM COMMAND PARAMETERS                          PSID
--- --- ------- ----------                          ----
0   000 COMMENT UVS RIM 0                           (384CP)
28  000+UVFLUSH DISCRD,UVS                          (349DT)
38  000 CMDRS                                       (157CW)
    001     1   34UVS,07,S,N,N,N,S,0,  ON,OFF,OFF,  ON,OFF,NOOVR,1,00,9C,00,00
    051    51   34UVS,C1,F,N,N,N,S,0,OFF,OFF,  ON,OFF,OFF,NOOVR,1,2C,05,00,00
54  001 TARGET  with TMC on body                    (165CR)
28  050+UVFLUSH PACKET,UVS                          (349DU)
```

Frame : 0

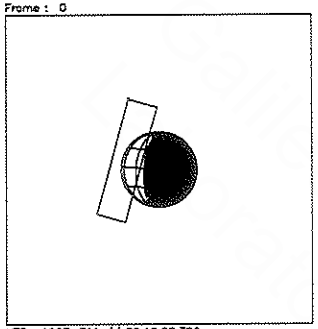

UTC : 1997-311 // 20:19:28.306
SCLK: 1/04207671:00:0:0

Frame : 1

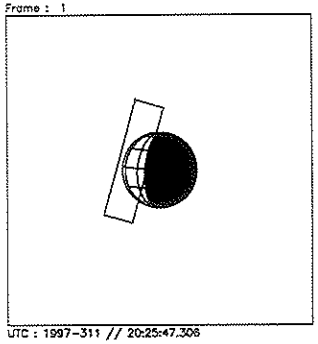

UTC : 1997-311 // 20:25:47.306
SCLK: 1/04207677:22:5:0

Frame : 2

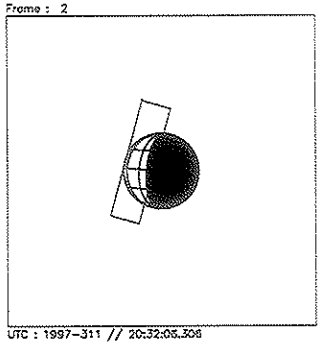

UTC : 1997-311 // 20:32:05.306
SCLK: 1/04207683:45:0:0

Frame : 3

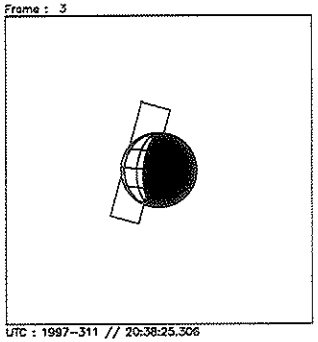

UTC : 1997-311 // 20:38:25.306
SCLK: 1/04207689:67:5:0

Frame : 4

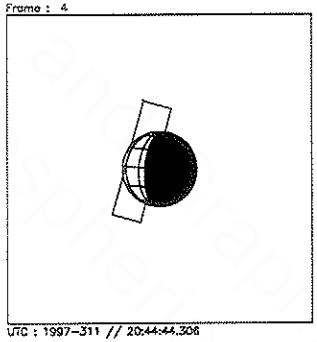

UTC : 1997-311 // 20:44:44.306
SCLK: 1/04207695:90:0:0

Frame : 5

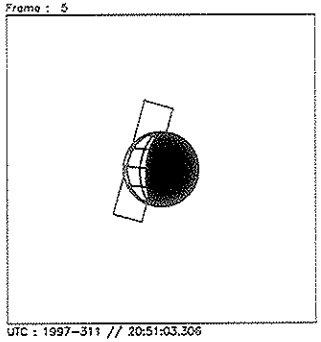

UTC : 1997-311 // 20:51:03.306
SCLK: 1/04207702:21:5:0

Frame : 6

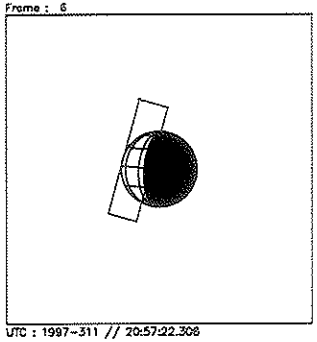

UTC : 1997-311 // 20:57:22.306
SCLK: 1/04207708:44:0:0

Frame : 7

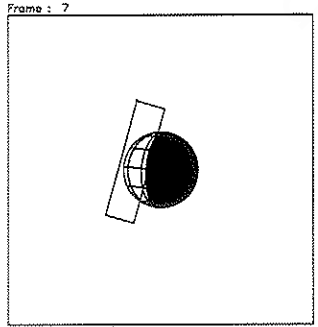

UTC : 1997-311 // 21:03:41.306
SCLK: 1/04207714:66:5:0

Frame : 8

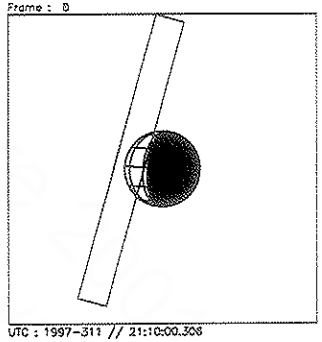

UTC : 1997-311 // 21:10:00.306
SCLK: 1/04207720:89:0:0

Start UTC_TIME : 1997-311 // 20:19:28.306
End UTC_TIME : 1997-311 // 21:10:01.637
Start SCLK : 1/04207671:00:0:0
Delta Time between FOV : 379.0000
FOVs : F Channel(0.1x0.4), N/G Channel(0.1x1.0)

Target Body : IO
Target Ra/Dec : 76.49/ 24.99 Deg
S/C to Body Center : 822592.6 Km (450.89627 Ri)
Z-axis Pointing (Ra / Dec) : 137.25 / 19.00 Deg

Activity ID: Orbit 11 **OAPEL** IUHRSPEC **SeqNo** 01+

Title UVS r/a w/ NIMS Io High Spectral Resolut **Instrument** UVS

Requestor UVS-SWG/W. SWEET X30523 **Team** UVS **Working Group** SWG

Time System CDS **Load ID** 11A **Calendar Date** 11/07/97 **Week** 45

Start	IEE-CDS 00000004:00:0	97-311/23:41:46.600	IEE-000/00:04:02.666
End	IEE+CDS 00000002:00:0	97-311/23:47:50.599	IEE+000/00:02:01.333
Duration	00000006:00:0	000/00:06:03.999	000/00:06:03.999

Top Label 11IUHRSPEC01+

Bottom Label (ride-along)

Plot Key	UVS	**Type**	SCI		
CDS Bytes	38	**Report Options**	BOTH	**Scan Platform**	No
CDS Source	OAP	**Spin State**	DUAL	**DMS**	No

Observation Objective

11IUHRSPEC01+: Ride-along with the NIMS 11IUHRSPEC01 observation to observe Io in the 1600Å to 3200Å wavelength regions at phase angles not obtainable from the Earth. Data will supplement and complement the NIMS surface property measurements.

Rj = 16.2
UVS configuration: F/F full scans

MBTG = (1008 bits/sec) * (180 sec) /1.5 (compression) = 0.121

Design Detail

```
CDS  RIM  COMMAND  PARAMETERS                                          PSID
---  ---  -------  ----------                                          ----
38   000  CMDRS                                                       (157CX)
     001      1    34UVS,07,S,N,N,N,S,0,  ON,OFF,OFF,  ON,OFF,NOOVR,1,00,9C,00,00
     006      6    34UVS,C1,F,N,N,N,S,0,OFF,OFF,  ON,OFF,OFF,NOOVR,1,2C,05,00,00
```

Frame : 0

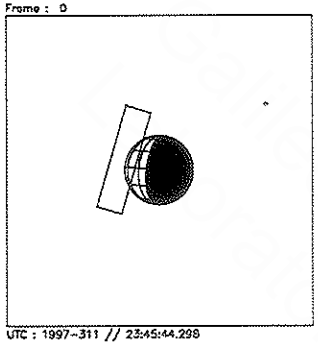

UTC : 1997-311 // 23:45:44.298
SCLK: 1/04207875:00:0:0

Frame : 1

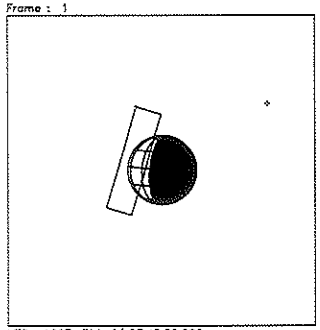

UTC : 1997-311 // 23:45:59.298
SCLK: 1/04207875:22:5:0

Frame : 2

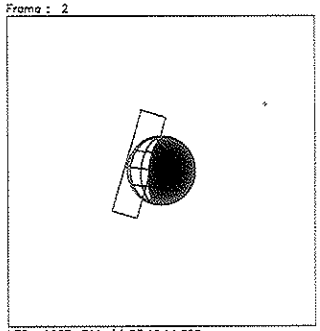

UTC : 1997-311 // 23:46:14.298
SCLK: 1/04207875:45:0:0

Frame : 3

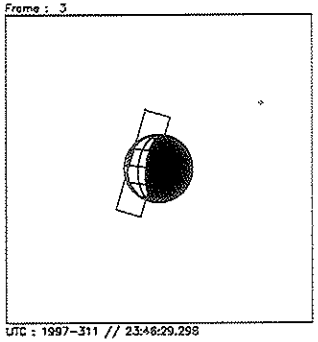

UTC : 1997-311 // 23:46:29.298
SCLK: 1/04207875:67:5:0

Frame : 4

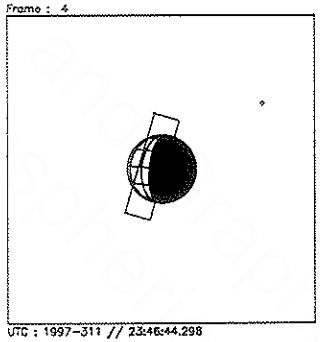

UTC : 1997-311 // 23:46:44.298
SCLK: 1/04207875:90:0:0

Frame : 5

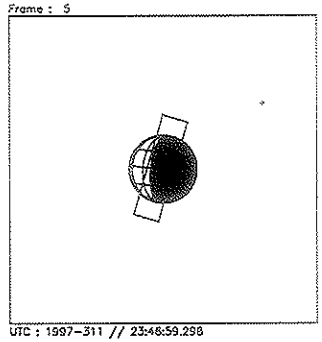

UTC : 1997-311 // 23:46:59.298
SCLK: 1/04207876:21:5:0

Frame : 6

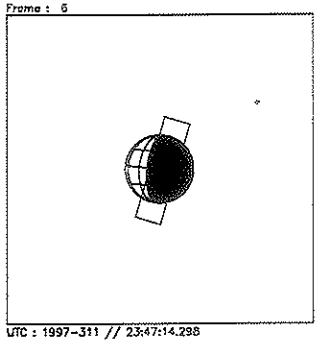

UTC : 1997-311 // 23:47:14.298
SCLK: 1/04207876:44:0:0

Frame : 7

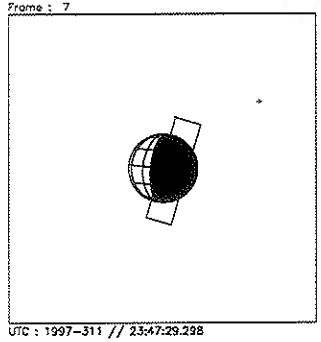

UTC : 1997-311 // 23:47:29.298
SCLK: 1/04207876:68:5:0

Frame : 8

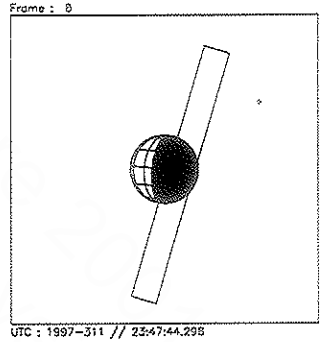

UTC : 1997-311 // 23:47:44.298
SCLK: 1/04207876:89:0:0

Start UTC_TIME : 1997-311 // 23:45:44.298
End UTC_TIME : 1997-311 // 23:47:45.632
Start SCLK : 1/04207875:00:0:0
Delta Time between FOV : 15.00000
FOVs : F Channel(0.1x0.4), N/G Channel(0.1x1.0)

Target Body : IO
Target Ra/Dec : 74.23/ 24.72 Deg
S/C to Body Center : 792739.8 Km (434.53274 Ri)
Z-axis Pointing (Ra / Dec) : 137.25 / 19.00 Deg

Activity ID: Orbit 11 **OAPEL** IUIODARK **SeqNo** 01-

Title UVS Io Eclipse **Instrument** UVS

Requestor UVS-SWG/W. SWEET X30523 **Team** UVS **Working Group** SWG

Time System CDS **Load ID** 11A **Calendar Date** 11/08/97 **Week** 45

Start	IEE+CDS 00000713:00:0	97-312/11:46:44.599	IEE+000/12:00:55.333
End	IEE+CDS 00000767:00:0	97-312/12:41:20.599	IEE+000/12:55:31.333
Duration	00000054:00:0	000/00:54:36.000	000/00:54:36.000

Top Label 11IUIODARK01-

Bottom Label (real-time)

Plot Key	UVS	**Type**	SCI		
CDS Bytes	148	**Report Options**	BOTH	**Scan Platform**	Yes
CDS Source	OAP	**Spin State**	DUAL	**DMS**	No

Observation Objective

11IUIODARK01- observation. Observe Io in eclipse at ~256° longitude and ~100° phase angle.
Target with TMC.

UVS configuration: 1356-1479 Å G/G 22-step mini-scans
Rj = 21.2

MBTG = 1 flush * 17712 bits/flush = 0.018

Design Detail

```
CDS  RIM  COMMAND  PARAMETERS                                    PSID
---  ---  -------  ----------                                    ----
0    000  COMMENT  UVS RIM 0                                     (384CQ)
28   002+UVFLUSH  DISCRD,UVS                                     (349DV)
38   002  CMDRS                                                  (157CY)
     003      1   34UVS,D3,F,N,N,N,S,0,OFF,OFF,  ON,  ON,OFF,NOOVR,1,B3,4D,00,51
     054     52   34UVS,C1,F,N,N,N,S,0,OFF,OFF,  ON,OFF,OFF,NOOVR,1,2C,05,00,00
54   003  TARGET   with TMC on body                             (165CS)
28   053+UVFLUSH  PACKET,UVS                                     (349DW)
```

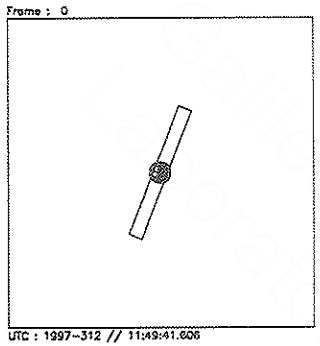

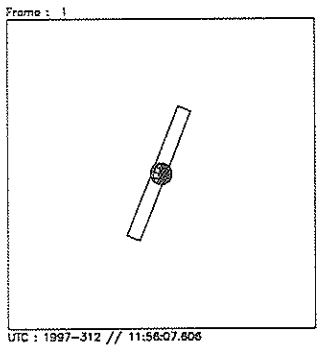

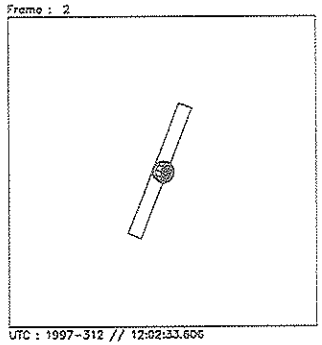

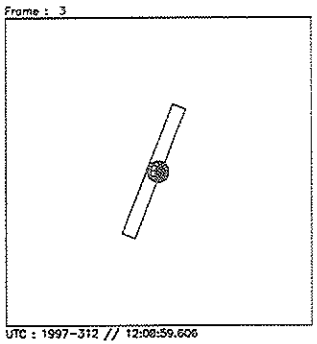

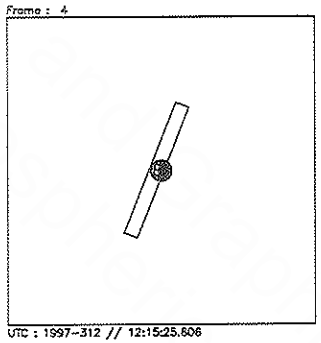

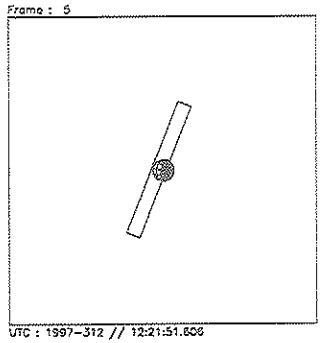

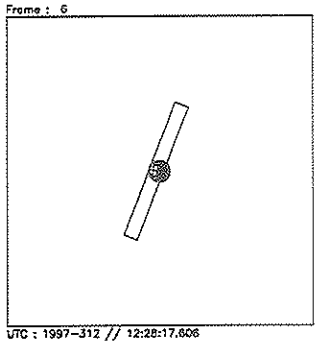

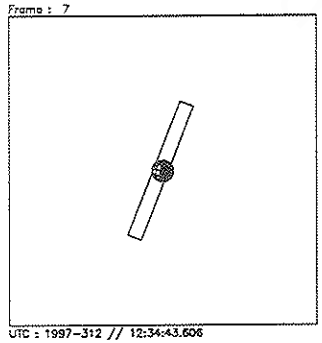

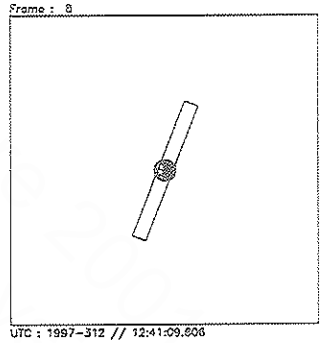

Start UTC_TIME : 1997-312 // 11:49:41.606
End UTC_TIME : 1997-312 // 12:41:15.604
Start SCLK : 1/04208591:00:0:0
Delta Time between FOV : 386.0000
FOVs : F Channel(0.1x0.4), N/G Channel(0.1x1.0)

Target Body : IO
Target Ra/Dec : 62.01/ 23.01 Deg
S/C to Body Center : 1363318. Km (747.28967 Ri)
Z-axis Pointing (Ra / Dec) : 137.25 / 19.00 Deg