Time-Ordered ing

Week	Date	Start Time	End Time	Duration	Activity	Team	Group	Actid	Plotkey	CDS
22	05/30/98	98-150/21:59:37.134	98-150/23:34:39.800	1:35:02.666	Europa Atmosphere Observation	UVS	SWG	15EUATMOS_01-	UVS	148
22	05/31/98	98-151/01:05:39.800	98-151/02:40:42.467	1:35:02.667	Europa Atmosphere Observation	UVS	SWG	15EUATMOS_02-	UVS	312
22	05/31/98	98-151/06:39:19.800	98-151/08:44:42.467	2:05:22.667	Io Atmosphere	UVS	SWG	15IUATMOS_01-	UVS	394
22	05/31/98	98-151/08:44:42.467	98-151/09:45:22.467	1:00:40.000	Europa Surface Observation	UVS	SWG	15EUSURFAC01-	UVS	148
22	05/31/98	98-151/12:14:00.467	98-151/13:14:40.467	1:00:40.000	Io Surface Observation	UVS	SWG	15IUSURFAC01-	UVS	148
22	05/31/98	98-151/14:14:19.800	98-151/15:14:59.800	1:00:40.000	Europa Surface Observation	UVS	SWG	15EUSURFAC02-	UVS	148
22	05/31/98	98-151/18:50:21.800	98-151/19:15:38.467	25:16.667	Io hi-res Surface Observation	UVS	SWG	15IUHRSPEC01+	UVS #	38
22	05/31/98	98-151/21:46:17.800	98-151/22:11:34.466	25:16.666	r/a Europa Surface Composition	UVS	SWG	15EUSUCOMP02+	UVS #	38
22	05/31/98	98-151/22:22:41.800	98-151/22:32:48.466	10:06.666	r/a Europa Surface Composition	UVS	SWG	15EUSUCOMP03+	UVS	38
22	05/31/98	98-151/23:09:12.467	98-151/23:32:27.800	23:15.333	Io hi-res Surface Observation	UVS	SWG	15IUHRSPEC02+	UVS	38
22	06/01/98	98-152/02:16:15.800	98-152/02:50:38.466	34:22.666	r/a Europa Global	UVS	SWG	15EUGLOBAL01+	UVS #	38
22	06/01/98	98-152/13:16:31.133	98-152/13:31:41.133	15:10.000	Europa Surface Observation	UVS	SWG	15EUEUR16H01+	UVS	38
22	06/01/98	98-152/17:46:29.133	98-152/18:02:39.800	16:10.667	Europa Surface Observation	UVS	SWG	15EUEUR20H01+	UVS	38
22	06/01/98	98-152/19:01:18.466	98-152/19:17:29.133	16:10.667	Europa Surface Observation	UVS	SWG	15EUEUR22H01+	UVS	38
22	06/01/98	98-152/19:49:50.466	98-152/20:54:33.133	1:04:42.667	Darkside Lyman-alpha	UVS	AWG	15JUDARKSIDE-	UVS	230
22	06/02/98	98-153/04:13:22.466	98-154/02:53:19.133	22:39:56.667	UVS/EUV IO TORUS MDNT ANSA, E15	~~UVS~~ EUV	MWG	15TV15MANS01-	UVS	2012
22	06/02/98	98-153/18:34:50.466	98-153/21:42:54.466	3:08:04.000	UVS/EUV IO TORUS MDNT ANSA, E15	UVS	MWG	15TU15MANS01-	UVS	95

*** TOTAL CDS BYTES *** 3939

at 0450037.90

Activity ID:	Orbit 15	OAPEL EUATMOS_		SeqNo 01-	
Title	Europa Atmosphere Observation			**Instrument**	UVS
Requestor	UVS-SWG/W. SWEET X30523	**Team**	UVS	**Working Group**	SWG

Time System	CDS	**Load ID**	15A	**Calendar Date**	05/30/98 Week 22
Start	JEE-CDS 00001696:00:0	98-150/21:59:37.134		JEE-001/04:34:50.666	
End	JEE-CDS 00001602:00:0	98-150/23:34:39.800		JEE-001/02:59:48.000	
Duration	00000094:00:0	000/01:35:02.666		000/01:35:02.666	

Top Label	15EUATMOS_01-				
Bottom Label	real-time				
Plot Key	UVS	**Type**	SCI		
CDS Bytes	148	**Report Options**	BOTH	**Scan Platform**	Yes
CDS Source	OAP	**Spin State**	DUAL	**DMS**	No

Observation Objective

15EUATMOS_01: Europa atmosphere observation. We will look for Europa atmospheric emissions (oxygen, hydrogen, sulfur, as well as other possible species). We will also monitor the tenous atmosphere for possible outgassing episodes. Observe Europa's surface for ~1 1/2 hours. Sunlight, longitude 94-101, phase 73.

Rj = 18.9

UVS configuration: full G/G scans

17712 bits/flush * 1 flushes = 0.018 mbtg

Design Detail

CDS	RIM	COMMAND	PARAMETERS	PSID
0	000	COMMENT	UVS RIM 0	(384CA)
28	003+UVFLUSH		DISCRD,UVS	(349CA)
38	003	CMDRS		(157CA)
	004	1	34UVS,D1,F,N,N,N,S,0,OFF,OFF, ON, ON,OFF,NOOVR,1,94,45,00,00	
	094	91	34UVS,C1,F,N,N,N,S,0,OFF,OFF, ON,OFF,OFF,NOOVR,1,2C,05,00,00	
54	004	TARGET	TMC on body (RA/Dec=268.81/-25.10) (165CA)	
28	093+UVFLUSH		PACKET,UVS	(349CB)

Mon May 4 22:31:38 1998

15EUATMOS_01

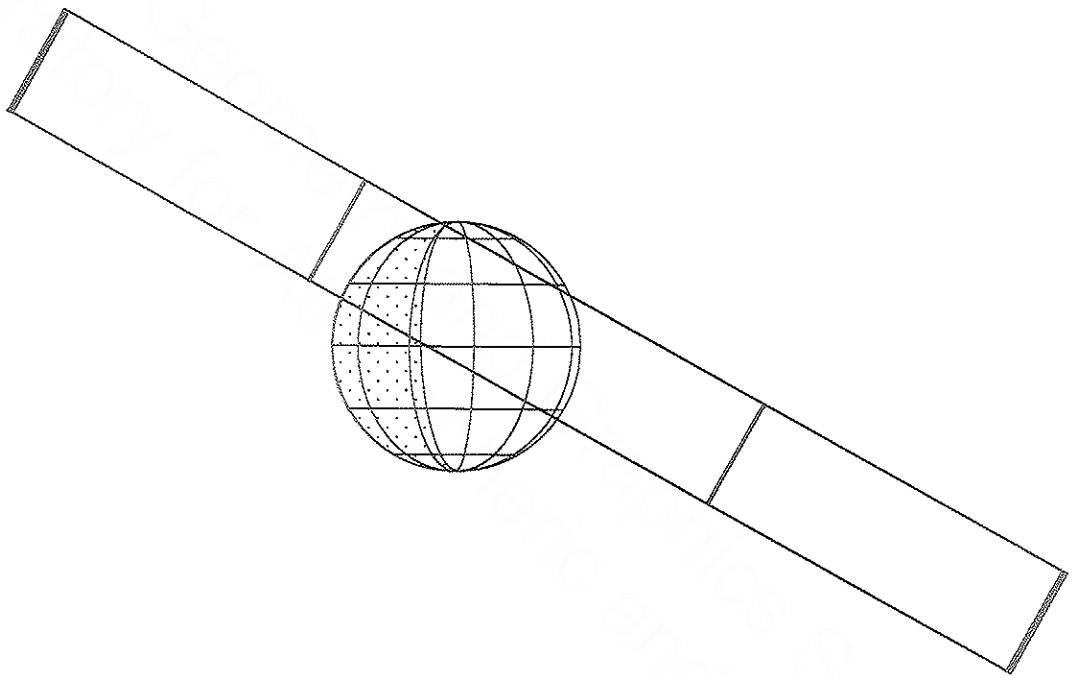

Start UTC_TIME : 1998-150 // 22:03:34.448
No End Time :
Start SCLK : 1/04498306:00:0:0

Target Body : EUROPA
Target Ra/Dec : 268.89/-25.10 Deg
S/C to Body Center : 825185.2 Km (527.27487 Re)
Z-axis Pointing (Ra / Dec) : 175.44 / 4.46 Deg

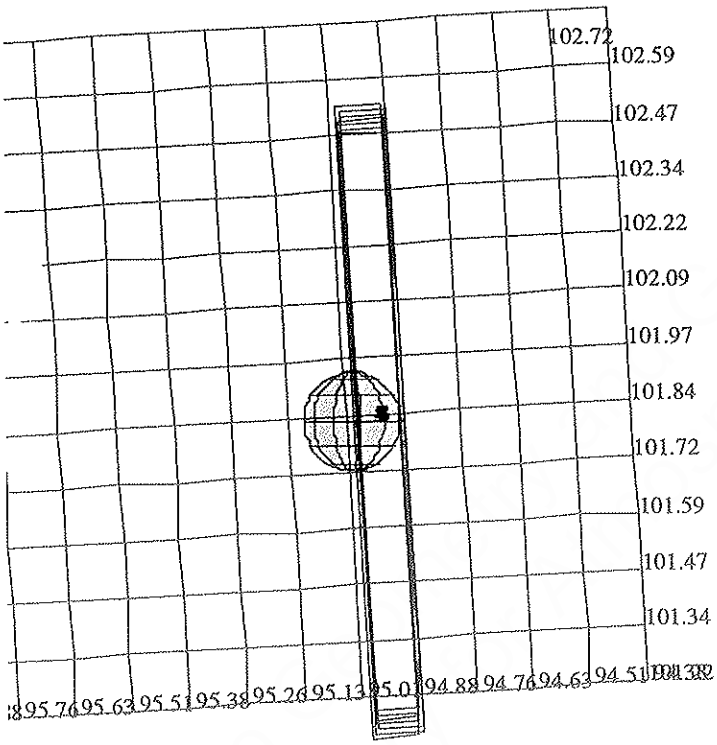

165CA:TT= 0 TMC= 2 C= -0.90 XC= 0.00 BS= 0/0647 TC= 3
A= 728 pD= 16370 SR=17.450 RA50=268.81 DEC50=-25.10 cone= 94.94 clock=101.83

ESIGN G3.2 kent : 4/22/1998 10:34: 5

ILE:P.15EUATMOS_01

ARGET BODY : EUROPA

:m.15EUATMOS_01

/C EPH:/DATA/NAVIO/T-980330-tour.NS

ERIAPSIS: THINNING: :UVS 60

TART:JEE 98-152/02:34:27.800 -CDS 1692:00:0 BODY PLOT TIME:TARGET-TIME D=16370 S= 0.130

Activity ID:	Orbit 15	OAPEL EUATMOS_		SeqNo 02-	
Title	Europa Atmosphere Observation			**Instrument**	UVS
Requestor	UVS-SWG/W. SWEET X30523	**Team**	UVS	**Working Group**	SWG

Time System	CDS	**Load ID**	15A	**Calendar Date**	05/31/98 Week 22
Start	JEE-CDS 00001512:00:0	98-151/01:05:39.800		JEE-001/01:28:48.000	
End	JEE-CDS 00001418:00:0	98-151/02:40:42.467		JEE-000/23:53:45.333	
Duration	00000094:00:0	000/01:35:02.667		000/01:35:02.667	

Top Label	15EUATMOS_02-				
Bottom Label	real-time				
Plot Key	UVS	**Type**	SCI		
CDS Bytes	312	**Report Options**	BOTH	**Scan Platform**	Yes
CDS Source	OAP	**Spin State**	DUAL	**DMS**	No

Observation Objective

15EUATMOS_02: Europa atmosphere observation. We will look for Europa atmospheric emissions (oxygen, hydrogen, sulfur, as well as other possible species). We will also monitor the tenous atmosphere for possible outgassing episodes. Observe Europa's surface for ~1 1/2 hours. Sunlight, longitude 140, phase 70.

Rj = 17.5

+1 Europa radii (left-hand side), for 30 rims
on Europa for 30 rims
-1 Europa radii for 30 rims

UVS configuration: G-G 88-step Ly-a mini-scan

17712 bits/flush * 3 flushes = 0.053 mbtg

Design Detail

CDS	RIM	COMMAND	PARAMETERS	PSID
0	000	COMMENT	UVS RIM 0	(384CB)
28	003+UVFLUSH		DISCRD,UVS	(349CC)
38	003	CMDRS		(157CB)
	004	1	DF,FIXED,NORM,NORM,NORM,SAME,0,OFF,OFF,ON,ON,OFF,NOOVR,1,2C,7D,00,2C	
	093	90	C1,FIXED,NORM,NORM,NORM,SAME,0,OFF,OFF,ON,OFF,OFF,NOOVR,1,2C,05,00,00	
54	004	TARGET	TMC +1 radii (RA/Dec=271.18/-25.07)	(165CB)
28	032+UVFLUSH		PACKET,UVS	(349CD)
54	034	TARGET	TMC on body (RA/Dec=271.89/-25.07)	(165CG)
28	062+UVFLUSH		PACKET,UVS	(349CE)
54	064	TARGET	TMC -1 radii (RA/Dec=272.58/-25.07)	(165CH)
28	092+UVFLUSH		PACKET,UVS	(349CF)

Mon May 4 22:33:24 1998

15EUATMOS_02

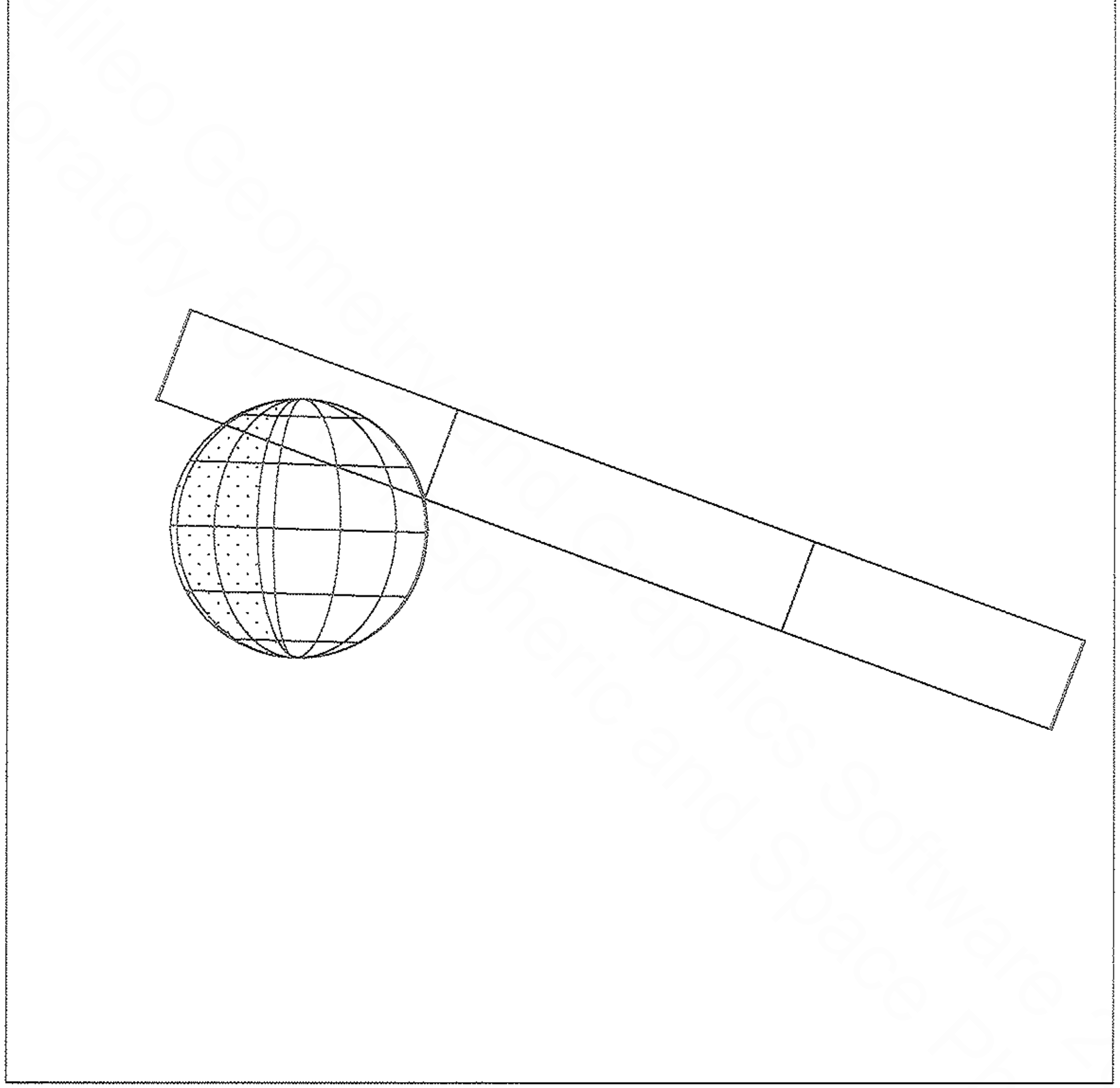

obs 1

Start UTC_TIME : 1998-151 // 01:09:37.108
No End Time :
Start SCLK : 1/04498490:00:0:0

Target Body : EUROPA
Target Ra/Dec : 271.55/-25.07 Deg
S/C to Body Center : 661105.1 Km (422.43137 Re)
Z-axis Pointing (Ra / Dec) : 175.44 /   4.46 Deg

Galileo Geometry and Graphics Software 2001
Laboratory for Atmospheric and Space Physics

Mon May 4 22:34:39 1998

Obs 2

15EUATMOS_02

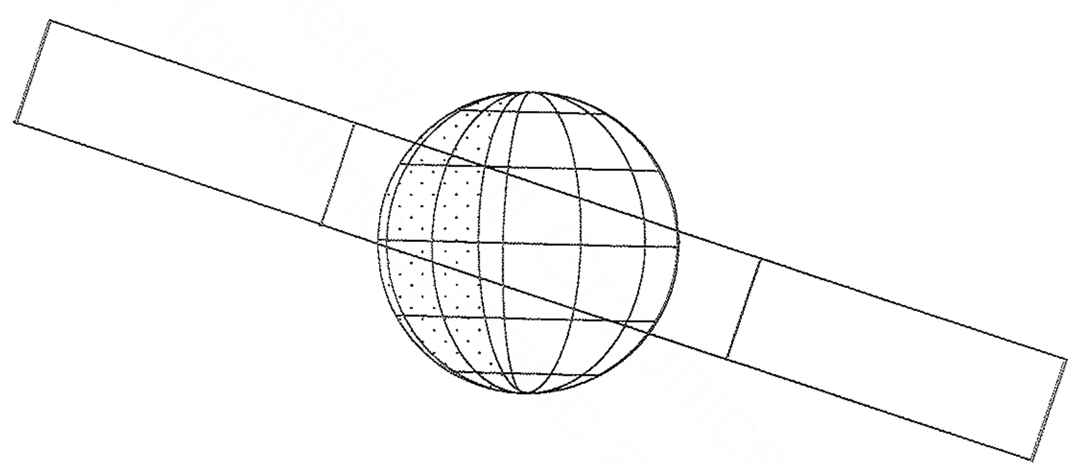

Galileo Geometry and Graphics Software 2001
Laboratory for Atmospheric and Space Physics

Start UTC_TIME : 1998-151 // 01:38:56.440
No End Time :
Start SCLK : 1/04498519:00:0:0

Target Body : EUROPA
Target Ra/Dec : 271.90/-25.07 Deg
S/C to Body Center : 636791.5 Km (406.89550 Re)
Z-axis Pointing (Ra / Dec) : 175.44 /   4.46 Deg

Mon May 4 22:36:11 1998

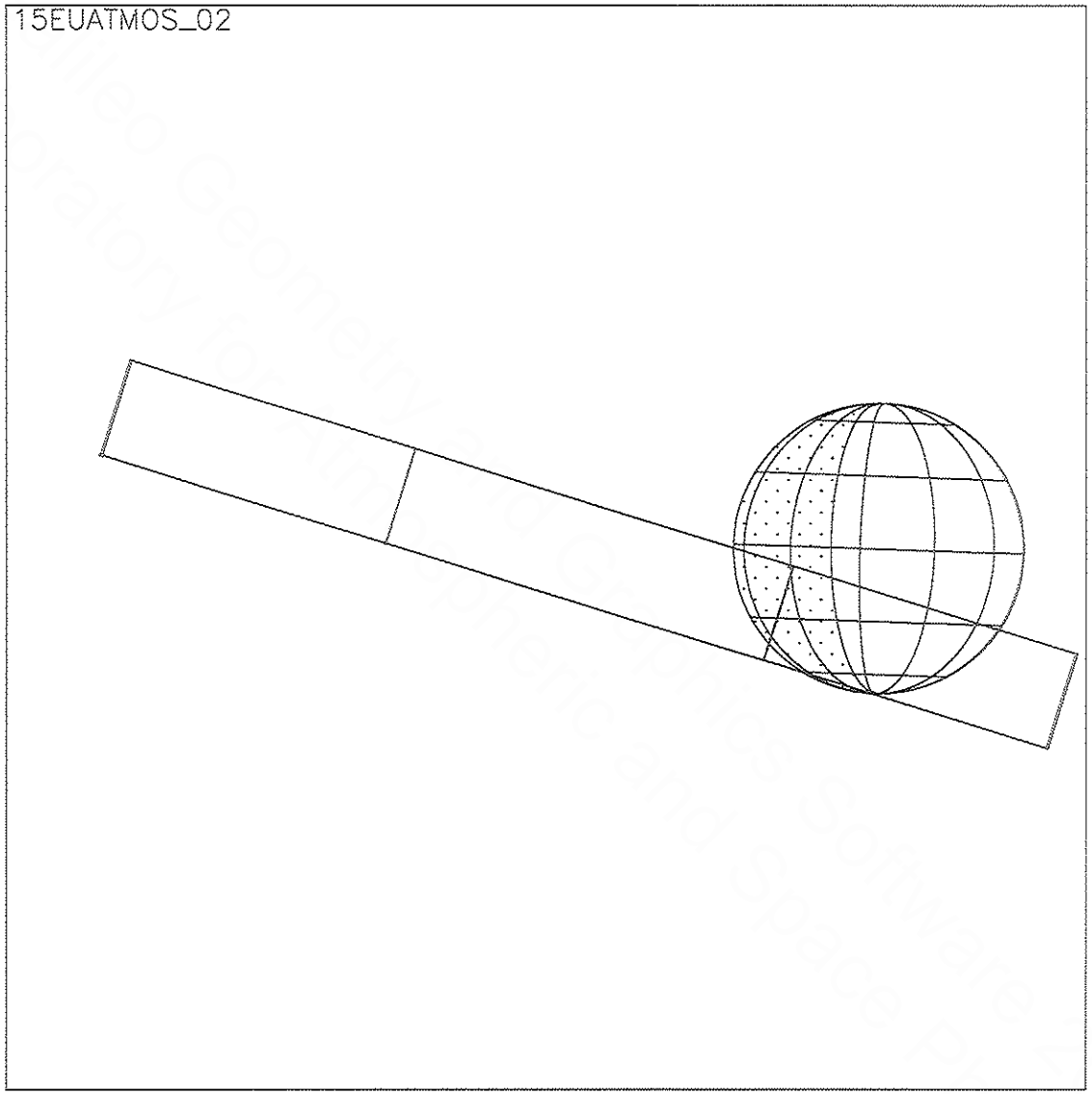

Start UTC_TIME : 1998-151 // 02:10:17.106
No End Time :
Start SCLK : 1/04498550:00:0:0

Target Body : EUROPA
Target Ra/Dec : 272.26/-25.06 Deg
S/C to Body Center : 611289.8 Km (390.60051 Re)
Z-axis Pointing (Ra / Dec) : 175.44 / 4.46 Deg

6bs 3

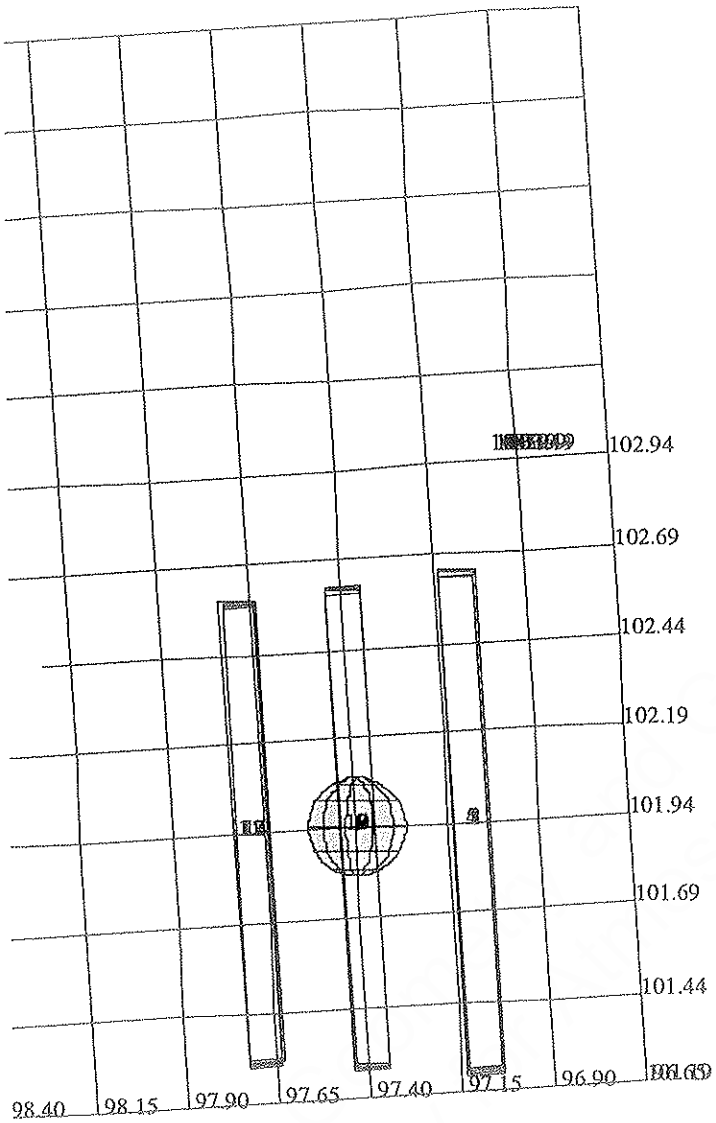

165CB:TT= 0 TMC= 1 C= -5.50 XC= 0.00 BS= 0/4135 TC= 3
A= 728 pD= 5268 SR=17.450 RA50=271.18 DEC50=-25.06 cone= 97.08 clock=101.94
165CG:TT= 0 TMC= 1 C= 0.00 XC= 0.00 BS= 0/9595 TC= 3
A= 182 pD= 5268 SR=17.450 RA50=271.89 DEC50=-25.07 cone= 97.72 clock=101.96
165CH:TT= 0 TMC= 1 C= 5.50 XC= 0.00 BS= 0/5055 TC= 3
A= 182 pD= 5268 SR=17.450 RA50=272.58 DEC50=-25.07 cone= 98.35 clock=101.97

ESIGN G3.2 kent : 4/22/1998 10:34:28

ILE:P.15EUATMOS_02

ARGET BODY : EUROPA

:m.15EUATMOS_02

/C EPH:/DATA/NAVIO/T-980330-tour.NS

ERIAPSIS: THINNING: :UVS 30

TART:JEE 98-152/02:34:27.800 -CDS 1508:00:0 BODY PLOT TIME:TARGET-TIME D= 5268 S= 0.130

Activity ID:	Orbit 15	OAPEL IUATMOS_		SeqNo 01-	
Title	Io Atmosphere			**Instrument**	UVS
Requestor	UVS-SWG/W. SWEET X30523	**Team**	UVS	**Working Group**	SWG

Time System	CDS	**Load ID**	15A	**Calendar Date**	05/31/98 Week 22
Start	JEE-CDS 00001182:00:0	98-151/06:39:19.800		JEE-000/19:55:08.000	
End	JEE-CDS 00001058:00:0	98-151/08:44:42.467		JEE-000/17:49:45.333	
Duration	00000124:00:0	000/02:05:22.667		000/02:05:22.667	

Top Label	15IUATMOS_01-				
Bottom Label	real-time				
Plot Key	UVS	**Type**	SCI		
CDS Bytes	394	**Report Options**	BOTH	**Scan Platform**	Yes
CDS Source	OAP	**Spin State**	DUAL	**DMS**	No

Observation Objective

15IUATMOS_01: Observations of Io atmosphere.
We investigate Io atmospheric emissions (oxygen, hydrogen, sulfur, as well as other possible species). We will also monitor the tenous atmosphere for variations due to volcanic activity and SO2 frost sublimation. Observe Io for 2 hours. Sunlight, longitude 107, phase 56.

Rj = 15

UVS configuration: G-G 88-step Ly-a mini-scan

17712 bits/flush * 4 flushes = 0.071 mbtg

Design Detail

CDS	RIM	COMMAND	PARAMETERS	PSID
0	000	COMMENT	UVS RIM 0	(384CC)
28	003+UVFLUSH	DISCRD,UVS		(349CG)
38	003	CMDRS		(157CC)
	004	1	34UVS,D1,F,N,N,N,S,0,OFF,OFF, ON, ON,OFF,NOOVR,1,94,45,00,00	
	124	121	34UVS,C1,F,N,N,N,S,0,OFF,OFF, ON,OFF,OFF,NOOVR,1,2C,05,00,00	
54	004	TARGET	TMC above body (RA/Dec=284.54/-23.13) (165CC)	
28	032+UVFLUSH	PACKET,UVS		(349CH)
54	034	TARGET	TMC +1 radii (RA/Dec=285.46/-23.97) (165CI)	
28	062+UVFLUSH	PACKET,UVS		(349CI)
54	064	TARGET	TMC on body (RA/Dec=286.88/-23.79) (165CJ)	
28	092+UVFLUSH	PACKET,UVS		(349CJ)
54	094	TARGET	TMC -1 radii (RA/Dec=288.29/-23.61) (165CK)	
28	122+UVFLUSH	PACKET,UVS		(349CK)

Mon May 4 22:39:11 1998

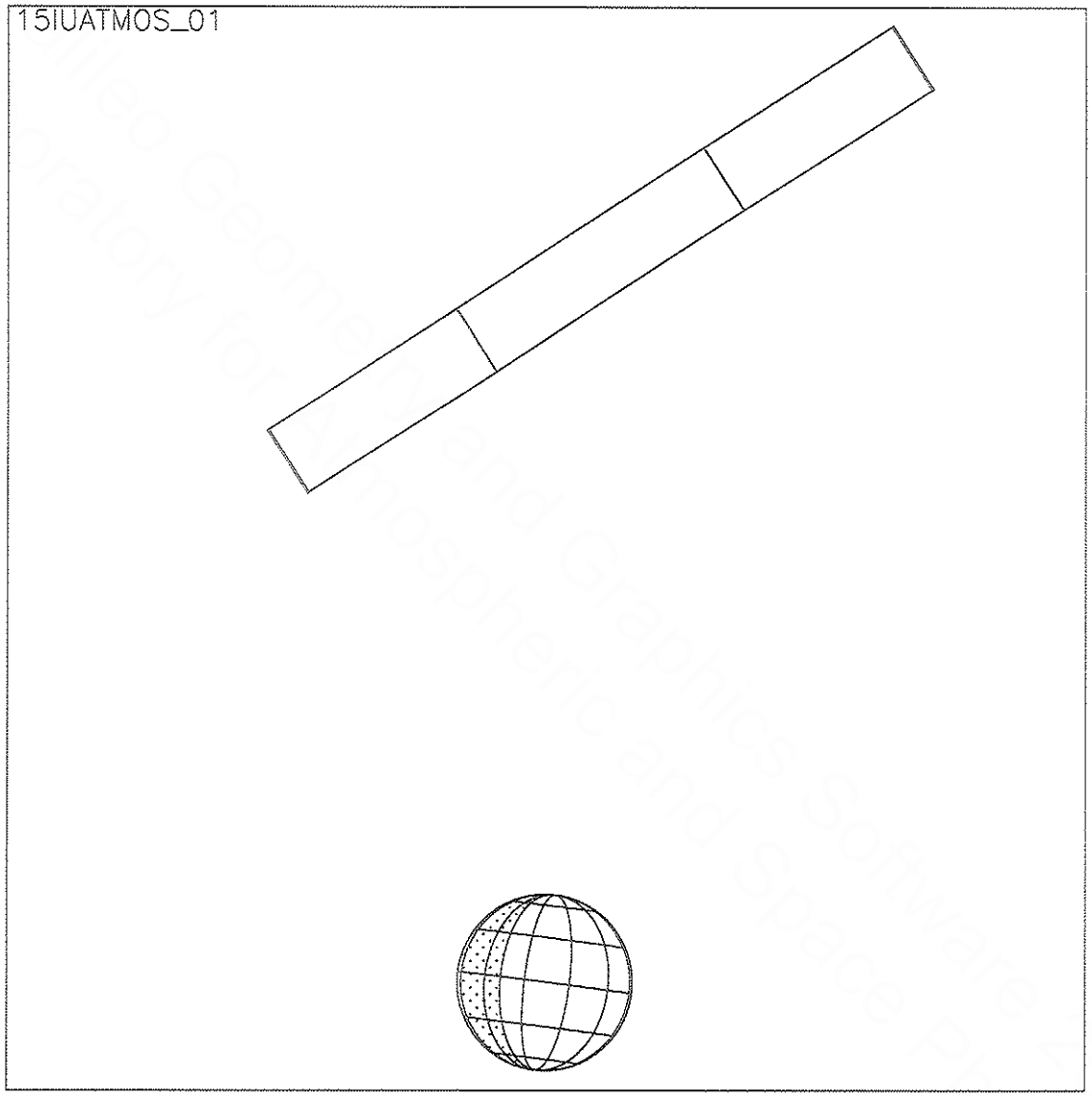

Obs 1

Start UTC_TIME : 1998-151 // 06:43:17.096
No End Time :
Start SCLK : 1/04498820:00:0:0

Target Body : IO
Target Ra/Dec : 284.62/-24.10 Deg
S/C to Body Center : 877855.2 Km (481.18794 Ri)
Z-axis Pointing (Ra / Dec) : 175.44 / 4.46 Deg

Mon May 4 22:40:30 1998

15IUATMOS_01

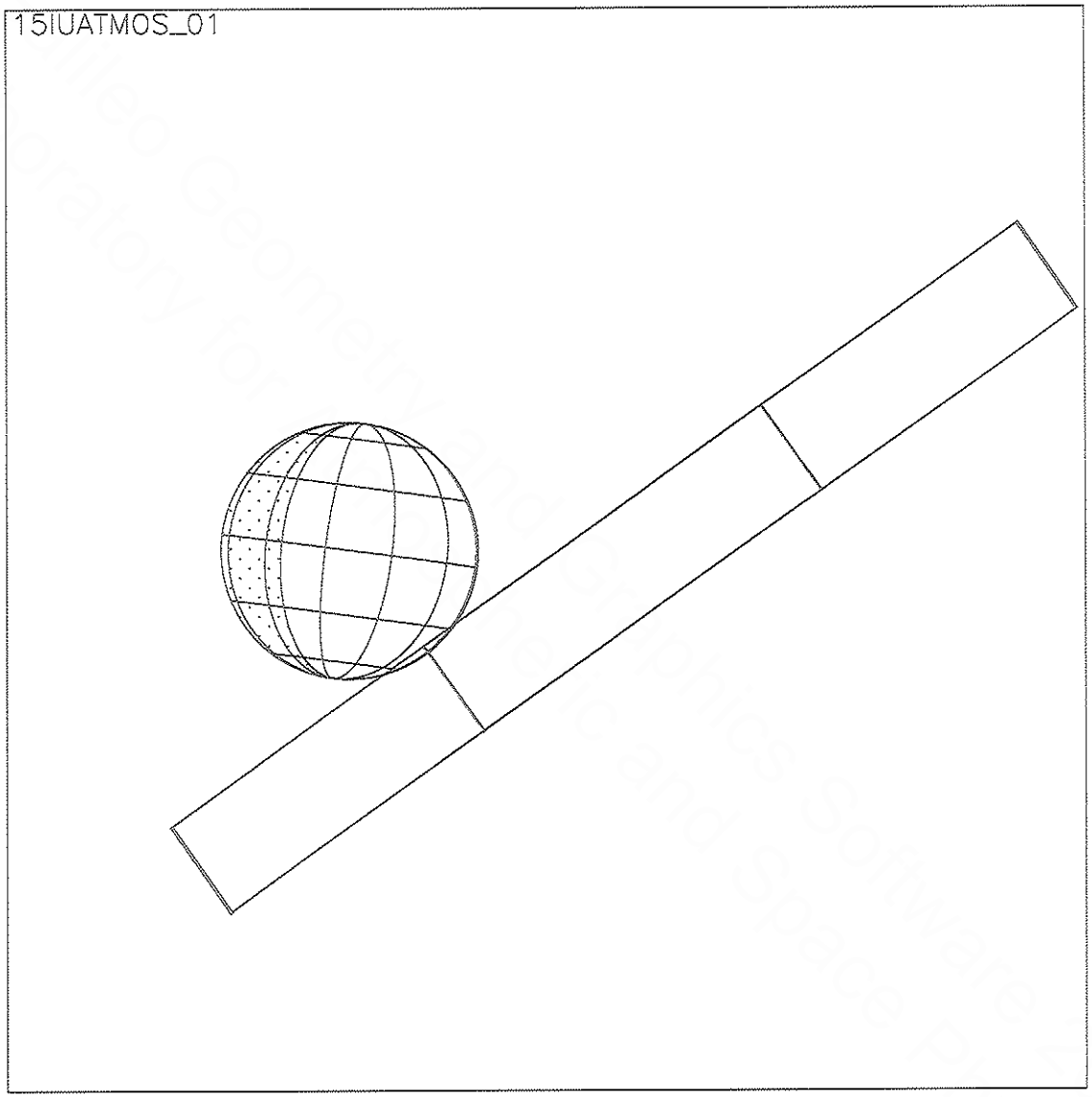

obs 2

Start UTC_TIME : 1998-151 // 07:12:36.428
No End Time :
Start SCLK : 1/04498849:00:0:0

Target Body : IO
Target Ra/Dec : 285.75/-23.95 Deg
S/C to Body Center : 842054.5 Km (461.56413 Ri)
Z-axis Pointing (Ra / Dec) : 175.44 / 4.46 Deg

Mon May 4 22:42:00 1998

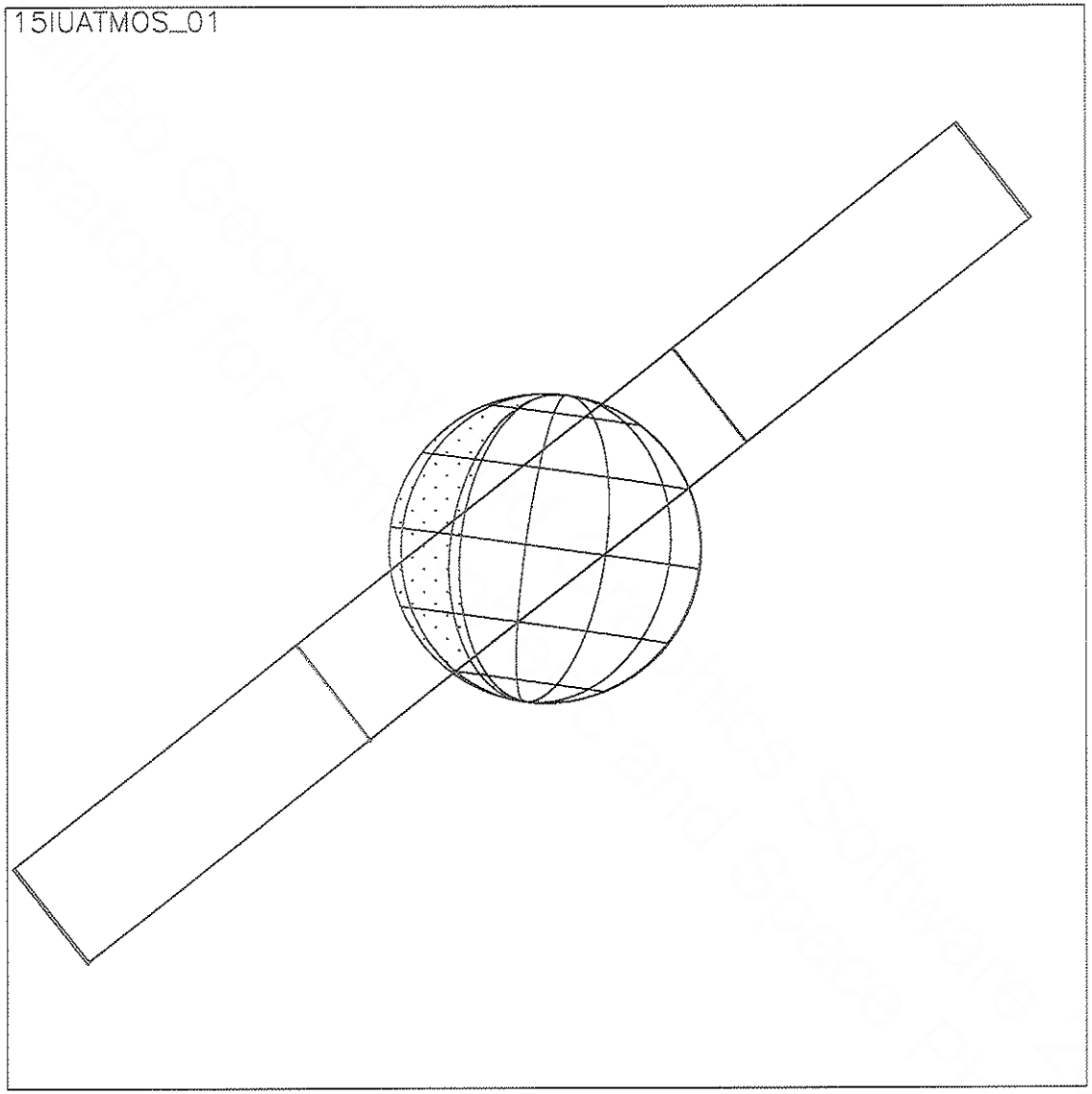

Obs 3

Start UTC_TIME : 1998-151 // 07:42:56.427
No End Time :
Start SCLK : 1/04498879:00:0:0

Target Body : IO
Target Ra/Dec : 286.85/-23.80 Deg
S/C to Body Center : 805697.0 Km (441.63512 Ri)
Z-axis Pointing (Ra / Dec) : 175.44 / 4.46 Deg

Mon May 4 22:43:28 1998

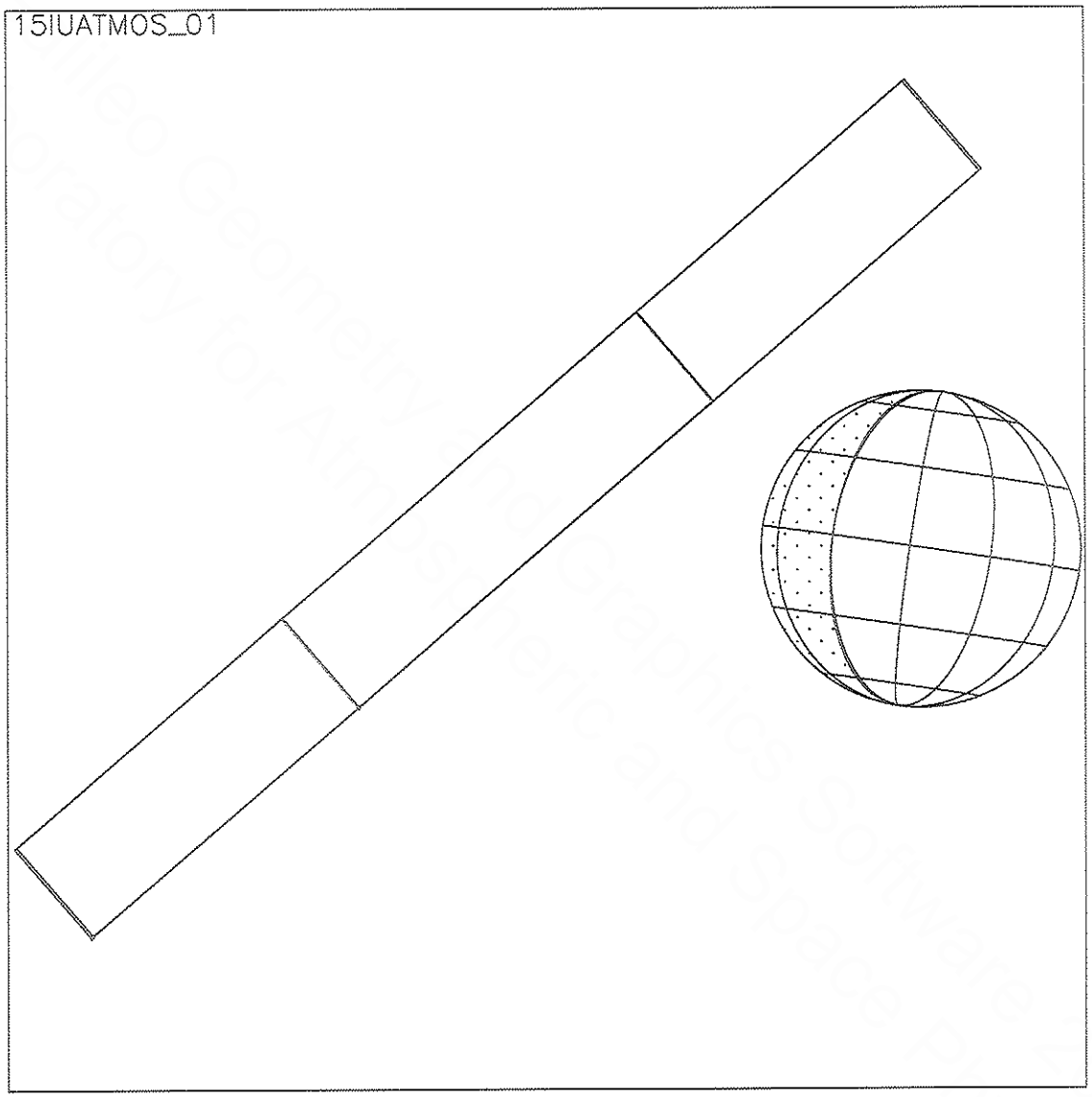

Start UTC_TIME : 1998-151 // 08:13:16.426
No End Time :
Start SCLK : 1/04498909:00:0:0

Target Body : IO
Target Ra/Dec : 287.90/-23.64 Deg
S/C to Body Center : 770104.4 Km (422.12537 Ri)
Z-axis Pointing (Ra / Dec) : 175.44 / 4.46 Deg

obs 4

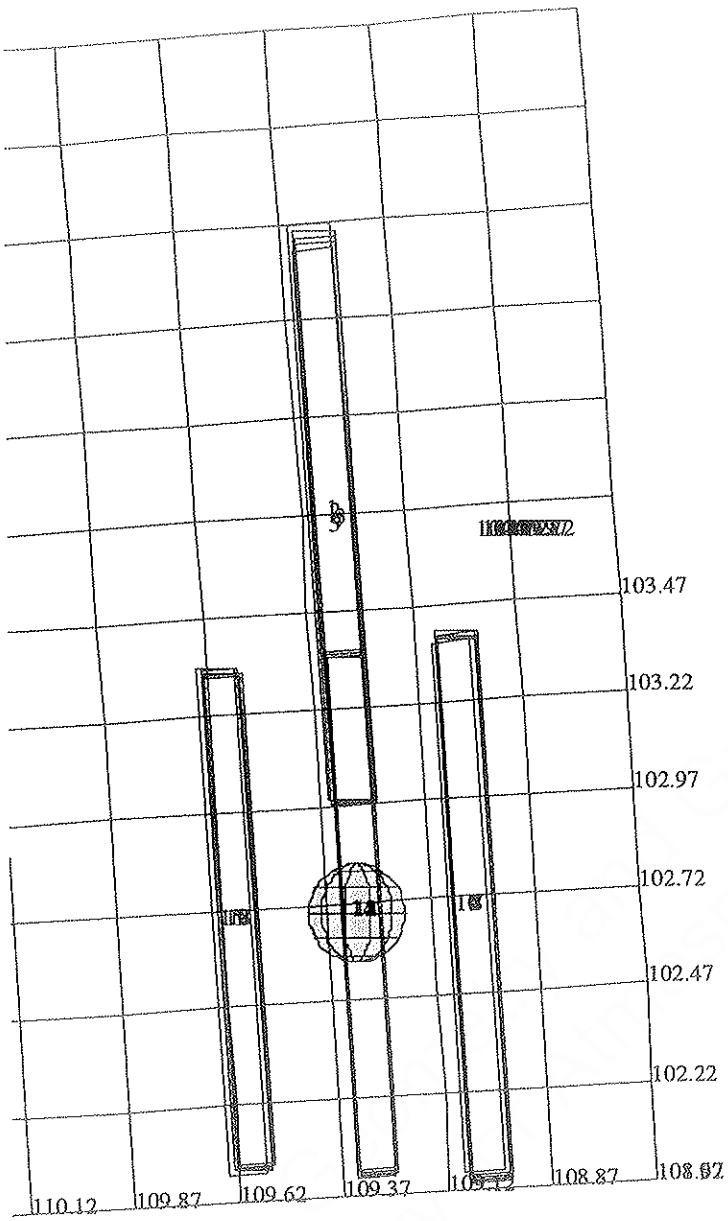

[redacted]

165CC:TT= 0 TMC= 1 C= 0.00 XC= 17.00 BS= 0/4195 TC= 3
A= 728 pD= 5268 SR=17.450 RA50=284.54 DEC50=-23.13 cone=109.30 clock=103.72
165CI:TT= 0 TMC= 1 C= -5.00 XC= 0.00 BS= 0/9655 TC= 3
A= 182 pD= 5268 SR=17.450 RA50=285.46 DEC50=-23.97 cone=110.09 clock=102.77
165CJ:TT= 0 TMC= 1 C= 0.00 XC= 0.00 BS= 0/5115 TC= 3
A= 182 pD= 5268 SR=17.450 RA50=286.88 DEC50=-23.79 cone=111.39 clock=102.85
165CK:TT= 0 TMC= 1 C= 6.00 XC= 0.00 BS= 0/0575 TC= 3
A= 182 pD= 5268 SR=17.450 RA50=288.29 DEC50=-23.61 cone=112.70 clock=102.93

ESIGN G3.2 kent : 4/22/1998 10:34:51

ILE:P.15IUATMOS_01

ARGET BODY : IO

:m.15IUATMOS_01

/C EPH:/DATA/NAVIO/T-980330-tour.NS

ERIAPSIS:

THINNING: :UVS 30

TART:JEE 98-152/02:34:27.800 -CDS 1178:00:0

BODY PLOT TIME:TARGET-TIME D= 5268 S= 0.130

Activity ID: Orbit 15 **OAPEL** EUSURFAC **SeqNo** 01-

Title Europa Surface Observation **Instrument** UVS

Requestor UVS-SWG/W. SWEET X30523 **Team** UVS **Working Group** SWG

Time System CDS **Load ID** 15A **Calendar Date** 05/31/98 **Week** 22

Start	JEE-CDS 00001058:00:0	98-151/08:44:42.467	JEE-000/17:49:45.333
End	JEE-CDS 00000998:00:0	98-151/09:45:22.467	JEE-000/16:49:05.333
Duration	00000060:00:0	000/01:00:40.000	000/01:00:40.000

Top Label 15EUSURFAC01-

Bottom Label real-time

Plot Key	UVS	**Type**	SCI		
CDS Bytes	148	**Report Options**	BOTH	**Scan Platform**	Yes
CDS Source	OAP	**Spin State**	DUAL	**DMS**	No

Observation Objective

15EUSURFAC01: We will observe Europa's surface at various longitudes and phase angles with TMC on to get good signal using F/F full scans. These observations will complement the nominal mission observations to derive phase curves for several locations on Europa, to understand how exogenic processes affect the surface scattering. We are interested in obtaining a high signal-to-noise at the shorter wavelengths (<2200 A) to see if Europa's surface has any distinctive features in the region. Observe Europa's surface for 1 hour. Sunlight, 160 longitude, 68 phase.

Rj = 14

1 flush
UVS configuration: F/F full scans

17712 bits/flush * 1 flush = 0.018 mbtg

Design Detail

CDS	RIM	COMMAND	PARAMETERS	PSID
0	000	COMMENT	UVS RIM 0	(384CD)
28	003+UVFLUSH		DISCRD,UVS	(349CL)
38	003	CMDRS		(157CD)
	004	1	34UVS,07,S,N,N,N,S,0, ON,OFF,OFF, ON,OFF,NOOVR,1,00,9C,00,00	
	062	59	34UVS,C1,F,N,N,N,S,0,OFF,OFF, ON,OFF,OFF,NOOVR,1,2C,05,00,00	
54	004	TARGET	TMC on body (RA/Dec=274.40/-25.07) (165CD)	
28	059+UVFLUSH		PACKET,UVS	(349CM)

Mon May 4 22:45:19 1998

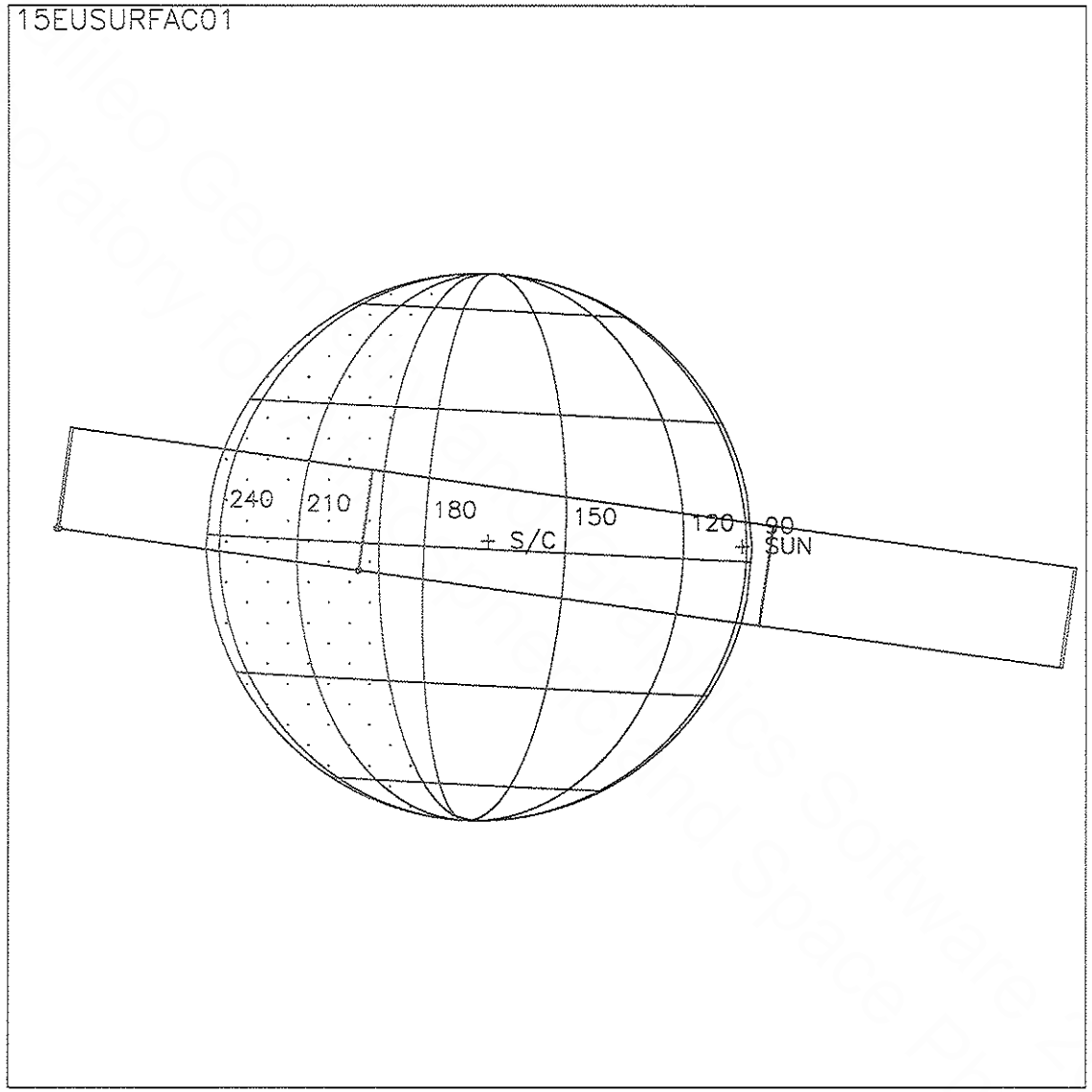

Start UTC_TIME : 1998-151 // 08:48:39.758
No End Time :
Start SCLK : 1/04498944:00:0:0

Target Body : EUROPA
Target Ra/Dec : 274.50/-25.07 Deg
S/C to Body Center : 333256.0 Km (212.94315 Re)
Z-axis Pointing (Ra / Dec) : 175.44 / 4.46 Deg

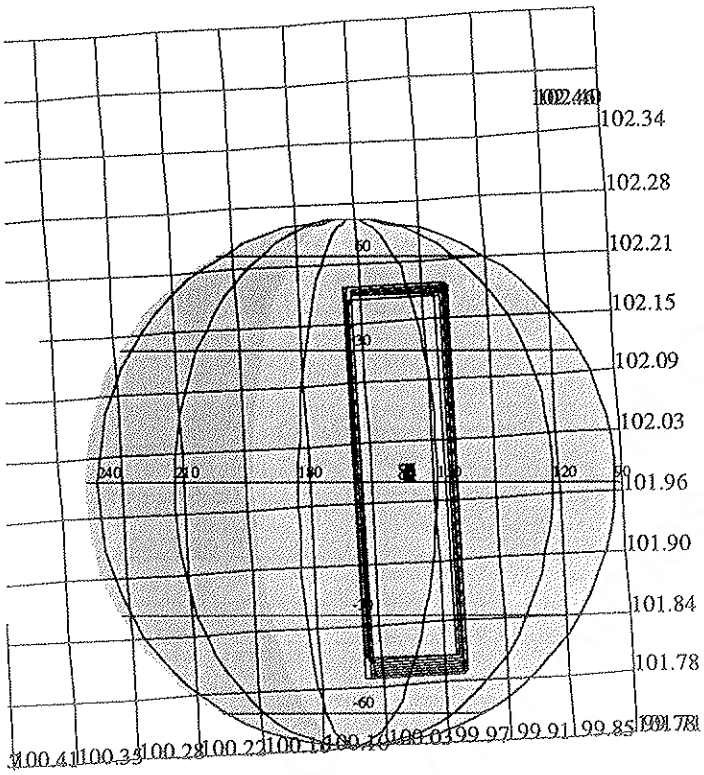

165CD:TT= 0 TMC= 1 C= -0.90 XC= 0.00 BS= 0/6763 TC= 3
A= 728 pD= 10182 SR=17.450 RA50=274.40 DEC50=-25.07 cone=100.00 clock=101.99

ESIGN G3.2 kent : 4/22/1998 10:35:10

ILE:P.15EUSURFAC01

ARGET BODY : EUROPA

':m.15EUSURFAC01

/C EPH:/DATA/NAVIO/T-980330-tour.NS

ERIAPSIS: THINNING: :UVS 60

TART:JEE 98-152/02:34:27.800 -CDS 1054:00:0 BODY PLOT TIME:TARGET-TIME D=10182 S= 0.700

Activity ID: Orbit 15 **OAPEL** IUSURFAC **SeqNo** 01-

Title Io Surface Observation **Instrument** UVS

Requestor UVS-SWG/W. SWEET X30523 **Team** UVS **Working Group** SWG

Time System CDS **Load ID** 15A **Calendar Date** 05/31/98 **Week** 22

Start	JEE-CDS 00000851:00:0	98-151/12:14:00.467	JEE-000/14:20:27.333
End	JEE-CDS 00000791:00:0	98-151/13:14:40.467	JEE-000/13:19:47.333
Duration	00000060:00:0	000/01:00:40.000	000/01:00:40.000

Top Label 15IUSURFAC01-

Bottom Label real-time

Plot Key	UVS	**Type**	SCI		
CDS Bytes	148	**Report Options**	BOTH	**Scan Platform**	Yes
CDS Source	OAP	**Spin State**	DUAL	**DMS**	No

Observation Objective

15IUSURFAC01: We will observe Io's surface at 130 deg. longitude and 51 phase angle with TMC on to get good signal using F/F full scans. We use this observation to complement our nominal mission observations of Io at various longitudes and phase angles to understand Io's ultraviolet phase curve and also to investigate the density of Io's atmosphere as it varies with location and time, dependent on location and activity of volcanoes, as well as on the amount of SO2 frost on the surface being sublimated. We are particularly interested in obtaining a high signal at the shorter wavelengths to identify the gaseous SO2 band near 2000 A. Sunlight, 130 longitude, 51 phase.

Rj = 12.5
UVS configuration: F/F full scans

17712 bits/flush * 1 flush = 0.018 mbtg

Design Detail

```
CDS   RIM    COMMAND  PARAMETERS                                          PSID
---   ---    -------  ----------                                          ----
0     000    COMMENT  UVS RIM 0                                           (384CE)
28    003+UVFLUSH     DISCRD,UVS                                          (349CN)
38    003    CMDRS                                                        (157CE)
      004        1    34UVS,07,S,N,N,N,S,0,  ON,OFF,OFF,    ON,OFF,NOOVR,1,00,9C,00,00
      060       57    34UVS,C1,F,N,N,N,S,0,OFF,OFF,    ON,OFF,OFF,NOOVR,1,2C,05,00,00
54    004    TARGET   TMC on body (RA/Dec=293.11/-22.66) (165CE)
28    059+UVFLUSH     PACKET,UVS                                          (349CO)
```

Mon May 4 22:46:47 1998

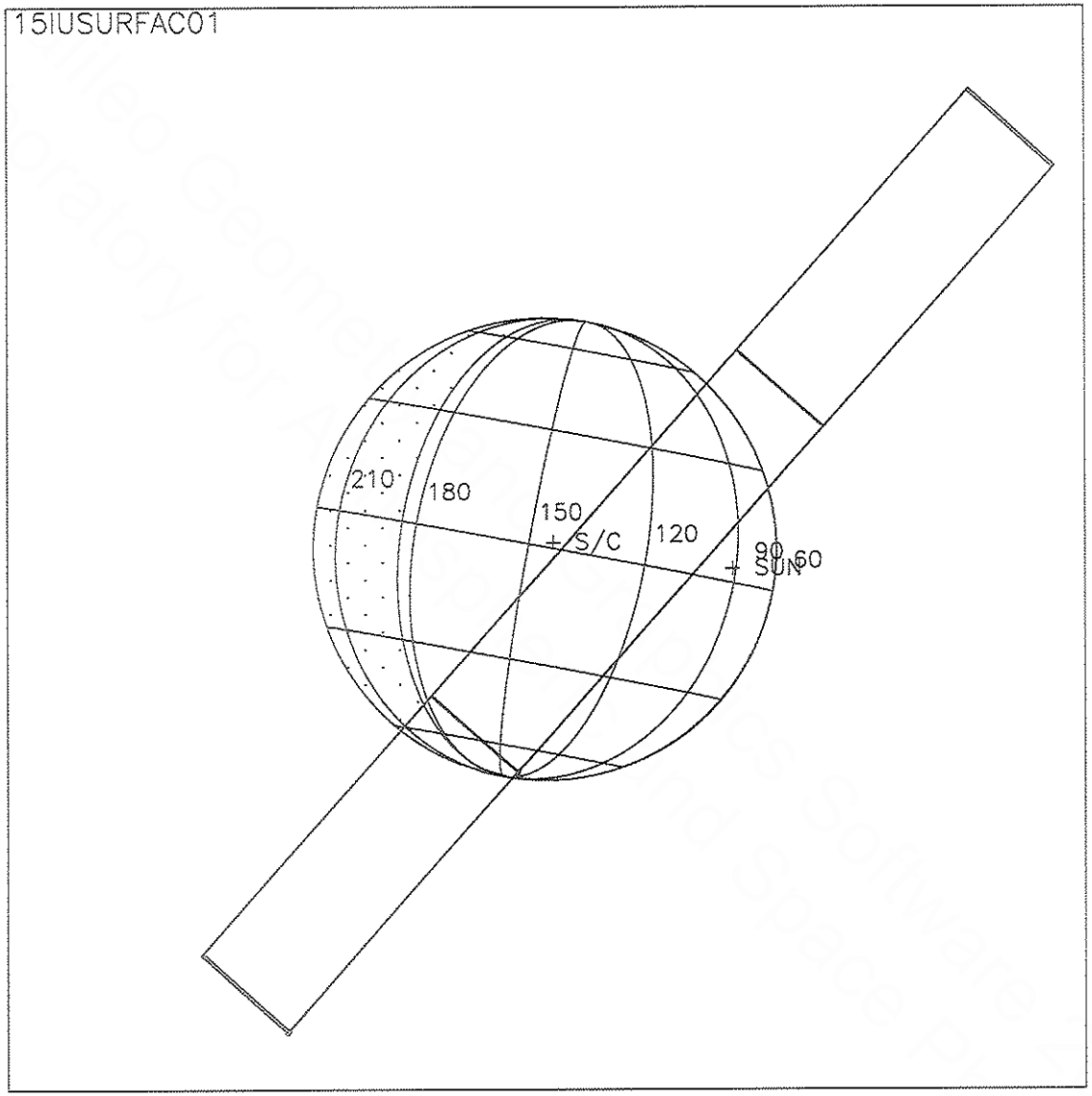

Start UTC_TIME : 1998-151 // 12:17:57.750
No End Time :
Start SCLK : 1/04499151:00:0:0

Target Body : IO
Target Ra/Dec : 293.19/-22.65 Deg
S/C to Body Center : 520381.0 Km (285.24187 Ri)
Z-axis Pointing (Ra / Dec) : 175.44 / 4.46 Deg

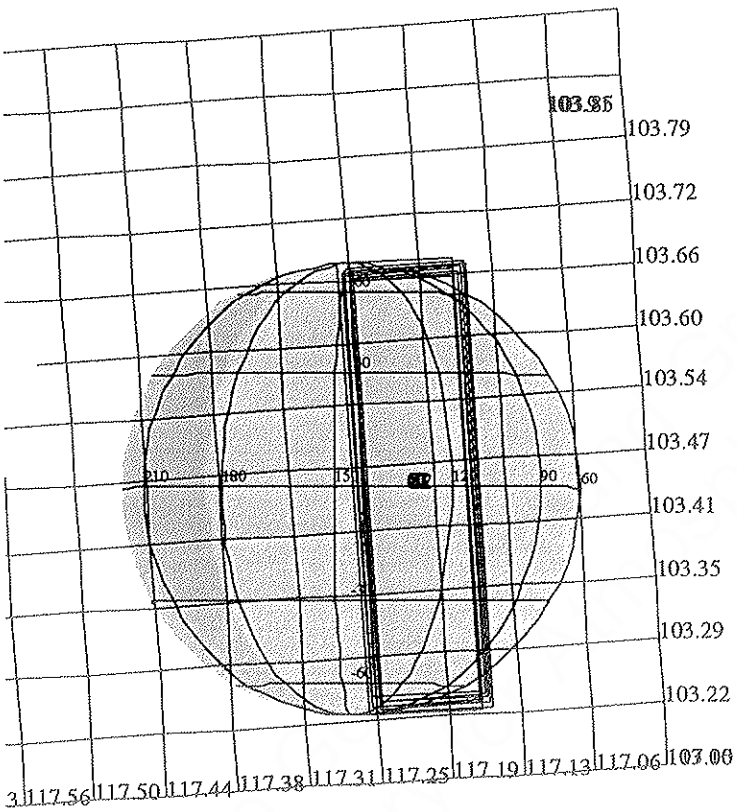

165CE:TT= 0 TMC= 2 C= -0.90 XC= 0.00 BS= 0/4437 TC= 3
A= 728 pD= 10182 SR=17.450 RA50=293.11 DEC50=-22.66 cone=117.21 clock=103.45

ESIGN G3.2 kent : 4/22/1998 10:35:26

ILE:P.15IUSURFAC01

ARGET BODY : IO

:m.15IUSURFAC01

/C EPH:/DATA/NAVIO/T-980330-tour.NS

ERIAPSIS: THINNING: :UVS 60

TART:JEE 98-152/02:34:27.800 -CDS 847:00:0 BODY PLOT TIME:TARGET-TIME D=10182 S= 0.600

Activity ID:	Orbit 15	OAPEL EUSURFAC		SeqNo	02-
Title	Europa Surface Observation			**Instrument**	UVS
Requestor	UVS-SWG/W. SWEET X30523	**Team**	UVS	**Working Group**	SWG

Time System	CDS	**Load ID**	15A	**Calendar Date**	05/31/98 Week 22
Start	JEE-CDS 00000732:00:0	98-151/14:14:19.800		JEE-000/12:20:08.000	
End	JEE-CDS 00000672:00:0	98-151/15:14:59.800		JEE-000/11:19:28.000	
Duration	00000060:00:0	000/01:00:40.000		000/01:00:40.000	

Top Label	15EUSURFAC02-				
Bottom Label	real-time				
Plot Key	UVS	**Type**	SCI		
CDS Bytes	148	**Report Options**	BOTH	**Scan Platform**	Yes
CDS Source	OAP	**Spin State**	DUAL	**DMS**	No

Observation Objective

15EUSURFAC02: We will observe Europa's surface at various longitudes and phase angles with TMC on to get good signal using F/F full scans. These observations will complement the nominal mission observations to derive phase curves for several locations on Europa, to understand how exogenic processes affect the surface scattering. We are interested in obtaining a high signal-to-noise at the shorter wavelengths (<2200 A) to see if Europa's surface has any distinctive features in the region. Observe Europa's surface for 1 hour. Sunlight, 177 longitude, 69 phase.

Rj = 11.7

UVS configuration: F/F full scans

17712 bits/flush * 1 flush = 0.018 mbtg

[waiver G-15 for inside 13 Rj]

Design Detail

CDS	RIM	COMMAND	PARAMETERS	PSID
0	000	COMMENT	UVS RIM 0	(384CG)
28	003+UVFLUSH		DISCRD,UVS	(349CP)
38	003	CMDRS		(157CD)
	004	1	34UVS,07,S,N,N,N,S,0, ON,OFF,OFF, ON,OFF,NOOVR,1,00,9C,00,00	
	060	57	34UVS,C1,F,N,N,N,S,0,OFF,OFF, ON,OFF,OFF,NOOVR,1,2C,05,00,00	
54	004	TARGET	TMC on body (RA/Dec=273.13/-25.32) (165CF)	
28	059+UVFLUSH		PACKET,UVS	(349CQ)

Mon May 4 22:50:33 1998

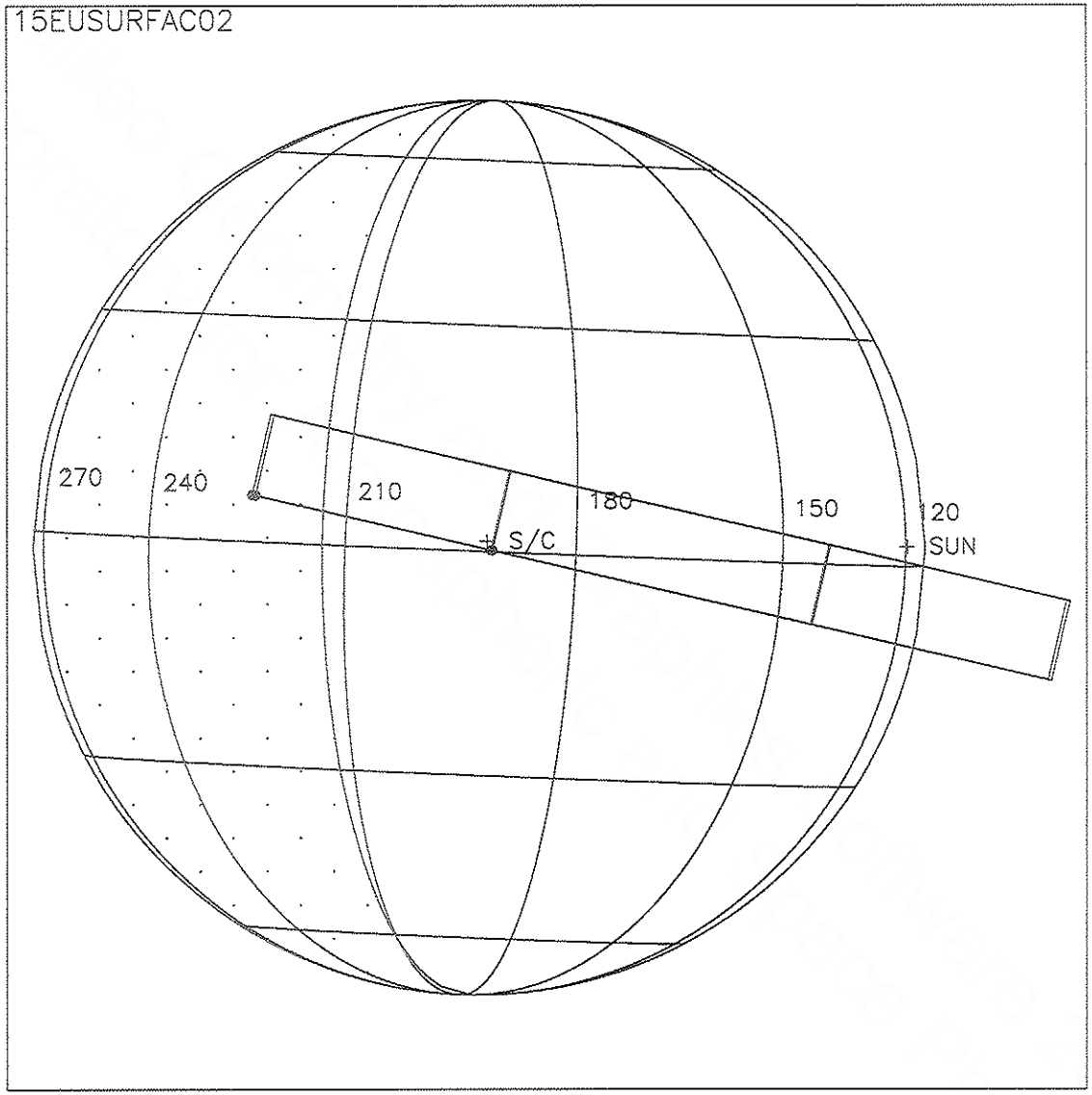

Start UTC_TIME : 1998-151 // 14:18:17.080
No End Time :
Start SCLK : 1/04499270:00:0:0

Target Body : EUROPA
Target Ra/Dec : 273.38/-25.32 Deg
S/C to Body Center : 164965.9 Km (105.40952 Re)
Z-axis Pointing (Ra / Dec) : 175.44 / 4.46 Deg

Mon Jun 1 17:53:19 1998

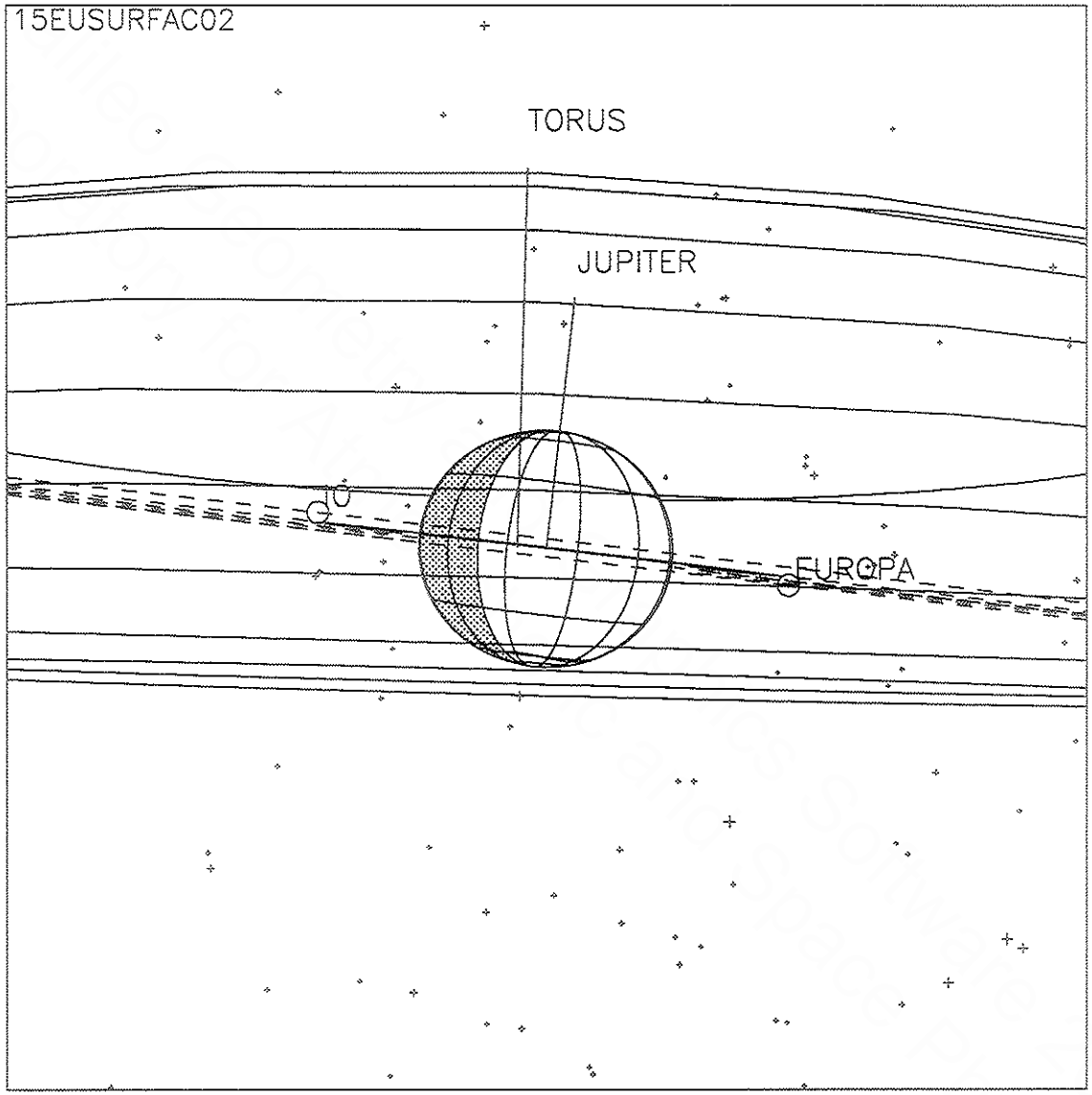

Start UTC_TIME : 1998-151 // 14:18:17.000
End UTC_TIME : 1998-151 // 15:18:17.000
Start SCLK : 1/04499269:90:8:6

Target Body : JUPITER
Target Cone/Clock : 108.45/102.56 Deg
S/C to Body Center : 839533.4 Km (11.743039 Rj)
Z-axis Pointing (Ra / Dec) : 175.44 / 4.46 Deg

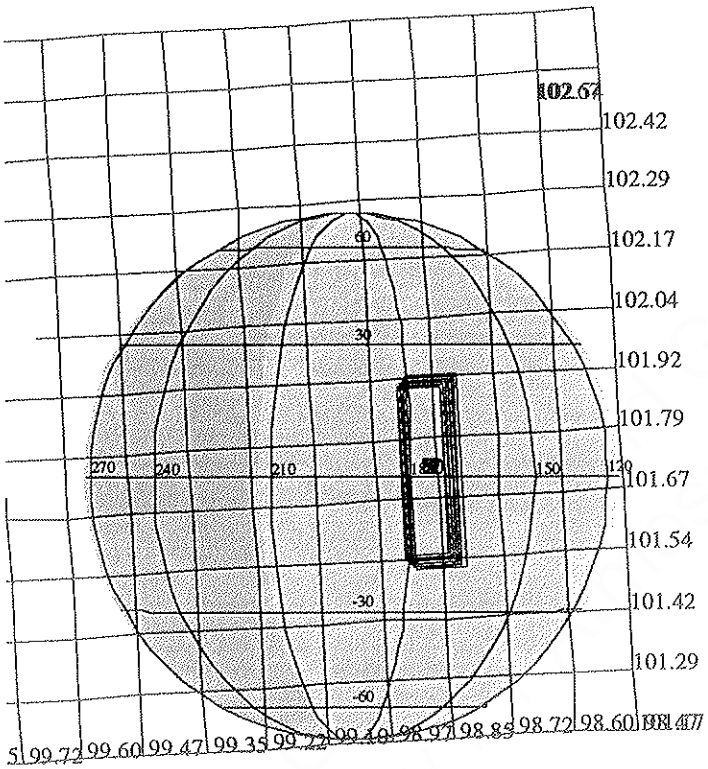

165CF:IT= 0 TMC= 2 C= -3.00 XC= 0.00 BS= 0/6095 TC= 3
A= 728 pD= 10182 SR=17.450 RA50=273.13 DEC50=-25.32 cone= 98.85 clock=101.72

ESIGN G3.2 kent : 4/22/1998 10:36:25

ILE:P.15EUSURFAC02

ARGET BODY : EUROPA

I:m.15EUSURFAC02

/C EPH:/DATA/NAVIO/T-980330-tour.NS

ERIAPSIS: THINNING: :UVS 60

TART:JEE 98-152/02:34:27.800 -CDS 728:00:0 BODY PLOT TIME:TARGET-TIME D=10182 S= 0.700

Activity ID: Orbit 15 **OAPEL** IUHRSPEC **SeqNo** 01+

Title Io hi-res Surface Observation **Instrument** UVS

Requestor UVS-SWG/W. SWEET X30523 **Team** UVS **Working Group** SWG

Time System CDS **Load ID** 15A **Calendar Date** 05/31/98 **Week** 22

Start	JEE-CDS 00000459:00:0	98-151/18:50:21.800	JEE-000/07:44:06.000
End	JEE-CDS 00000434:00:0	98-151/19:15:38.467	JEE-000/07:18:49.333
Duration	00000025:00:0	000/00:25:16.667	000/00:25:16.667

Top Label 15IUHRSPEC01+

Bottom Label NIMS ride-along

Plot Key	UVS	**Type**	SCI		
CDS Bytes	38	**Report Options**	BOTH	**Scan Platform**	Yes
CDS Source	OAP	**Spin State**	DUAL	**DMS**	Yes

Observation Objective

15IUHRSPEC01: Ride-along with the NIMS 15INHRSPEC01 observation to observe Io at high spectral resolution in the 1600 A to 3200A wavelength regions at phase angles not obtainable from the Earth. Data will supplement and complement the NIMS surface property measurements.

Rj = 12.1

UVS configuration: full scan F/F

((1008 bps) * (21 RIMs)) * 0.333 (compression) = 0.428 mbtg

[waiver G-15 for inside 13 Rj]

Design Detail

```
CDS   RIM   COMMAND PARAMETERS                          PSID
---   ---   ------- ----------                          ----
0     000   COMMENT UVS RIM 0                           (384CF)
38    003   CMDRS                                       (157CF)
      004       1   34UVS,07,S,N,N,N,S,0,  ON,OFF,OFF,  ON,OFF,NOOVR,1,00,9C,00,00
      025      22   34UVS,C1,F,N,N,N,S,0,OFF,OFF,  ON,OFF,OFF,NOOVR,1,2C,05,00,00
```

Mon May 4 22:48:42 1998

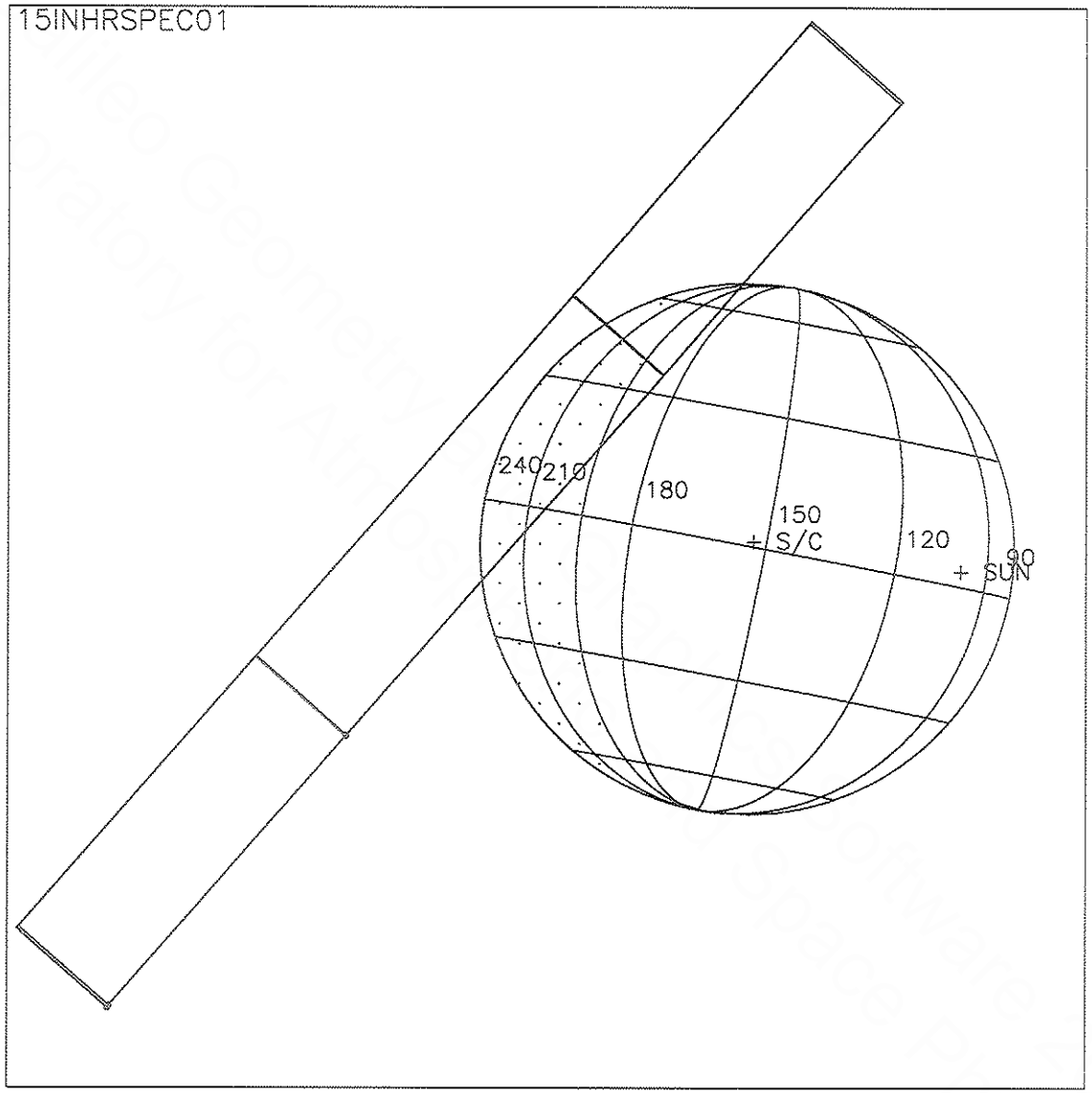

Start UTC_TIME : 1998-151 // 13:18:37.748
No End Time :
Start SCLK : 1/04499211:00:0:0

Target Body : IO
Target Ra/Dec : 293.41/-22.57 Deg
S/C to Body Center : 471560.9 Km (258.48157 Ri)
Z-axis Pointing (Ra / Dec) : 175.44 / 4.46 Deg

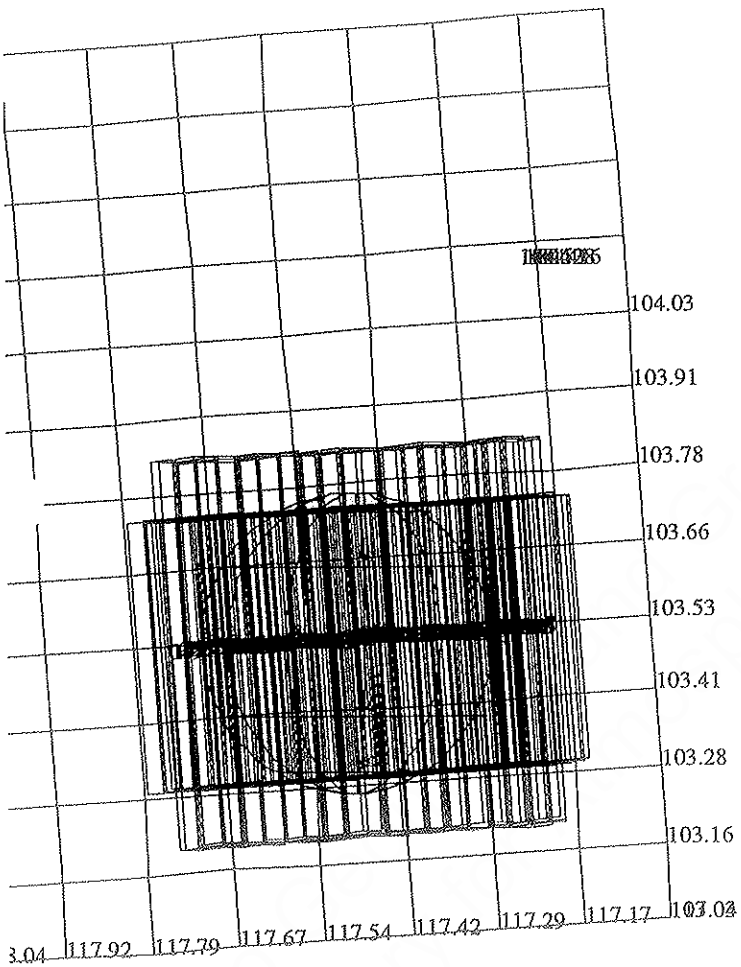

165 :TT= 0 TMC= 1 C= 4.60 XC= 0.00 BS= 0/5357 TC= 3
A= 728 pD= 3812 SR=17.450 RA50=293.67 DEC50=-22.54 cone=117.74 clock=103.52
117 :#SB= 1 OR= 0.030 RR=12.000 BM=F RC= 1 BS= 0/5357
1:#s= 4 Cs= -9.20 XCs= 0.00 Cr= 9.06 XCr= 0.00 sD= 930 rD= 24

ESIGN G3.2 kent : 4/22/1998 10:35:47

ILE:P.fake

ARGET BODY : IO

:m.15IUHRSPEC01

/C EPH:/DATA/NAVIO/T-980330-tour.NS

ERIAPSIS: THINNING:NIM 2 :UVS 1

TART:IEE 98-151/20:58:46.466 -CDS 455:00:0 BODY PLOT TIME:TARGET-TIME D= 3812 S= 0.400

Activity ID: Orbit 15 OAPEL EUSUCOMP SeqNo 02+

Title r/a Europa Surface Composition **Instrument** UVS

Requestor UVS-SWG/W. SWEET X30523 **Team** UVS **Working Group** SWG

Time System CDS **Load ID** 15A **Calendar Date** 05/31/98 **Week** 22

Start	EEE+CDS 00000033:00:0	98-151/21:46:17.800	EEE+000/00:33:22.000
End	EEE+CDS 00000058:00:0	98-151/22:11:34.466	EEE+000/00:58:38.666
Duration	00000025:00:0	000/00:25:16.666	000/00:25:16.666

Top Label 15EUSUCOMP02+

Bottom Label NIMS ride-along

Plot Key	UVS	**Type**	SCI		
CDS Bytes	38	**Report Options**	BOTH	**Scan Platform**	Yes
CDS Source	OAP	**Spin State**	DUAL	**DMS**	Yes

Observation Objective

15EUSUCOMP02: Ride-along with NIMS 15ENSUCOMP02 observation to observe Europa in the 1600A - 3200 A wavelength regions at phase angles not obtainable from Earth. Data will supplement and complement the NIMS surface property measurements.

Rj = 9.4
UVS configuration: full F/F scans.

((1008 bps) * (19 RIMs)) * 0.333 (compression) = 0.391 mbtg

[waiver G-15 for inside 13 Rj]

Design Detail

CDS	RIM	COMMAND	PARAMETERS	PSID
0	000	COMMENT	UVS RIM 0	(384CI)
38	003	CMDRS		(157CI)
	004	1	34UVS,07,S,N,N,N,S,0, ON,OFF,OFF, ON,OFF,NOOVR,1,00,9C,00,00	
	023	20	34UVS,C1,F,N,N,N,S,0,OFF,OFF, ON,OFF,OFF,NOOVR,1,2C,05,00,00	

Mon May 4 22:54:48 1998

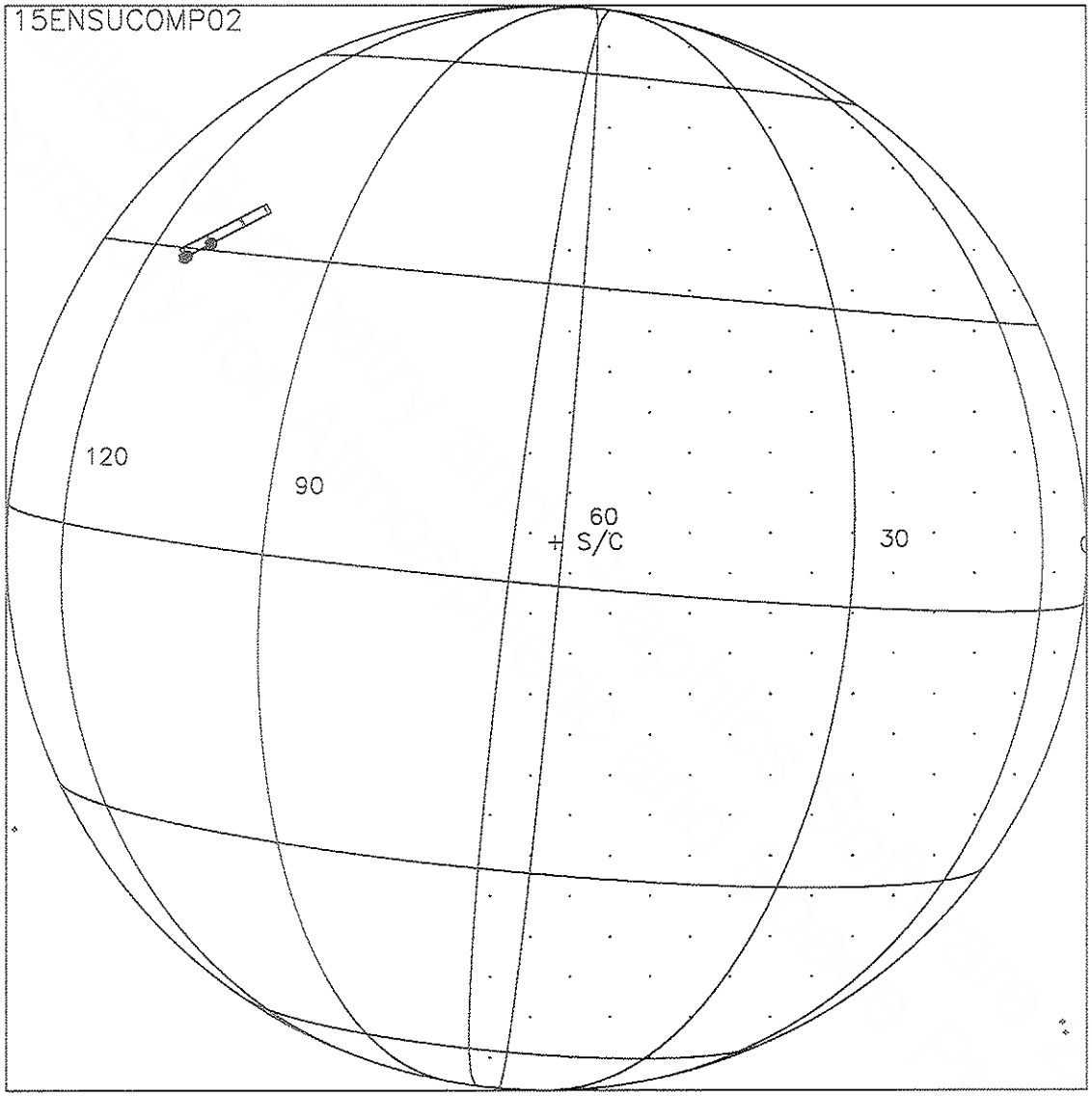

Start UTC_TIME : 1998-151 // 21:50:15.063
No End Time :
Start SCLK : 1/04499717:00:0:0

Target Body : EUROPA
Target Ra/Dec : 74.95/ 21.08 Deg
S/C to Body Center : 15196.65 Km (9.7103169 Re)
Z-axis Pointing (Ra / Dec) : 175.44 / 4.46 Deg

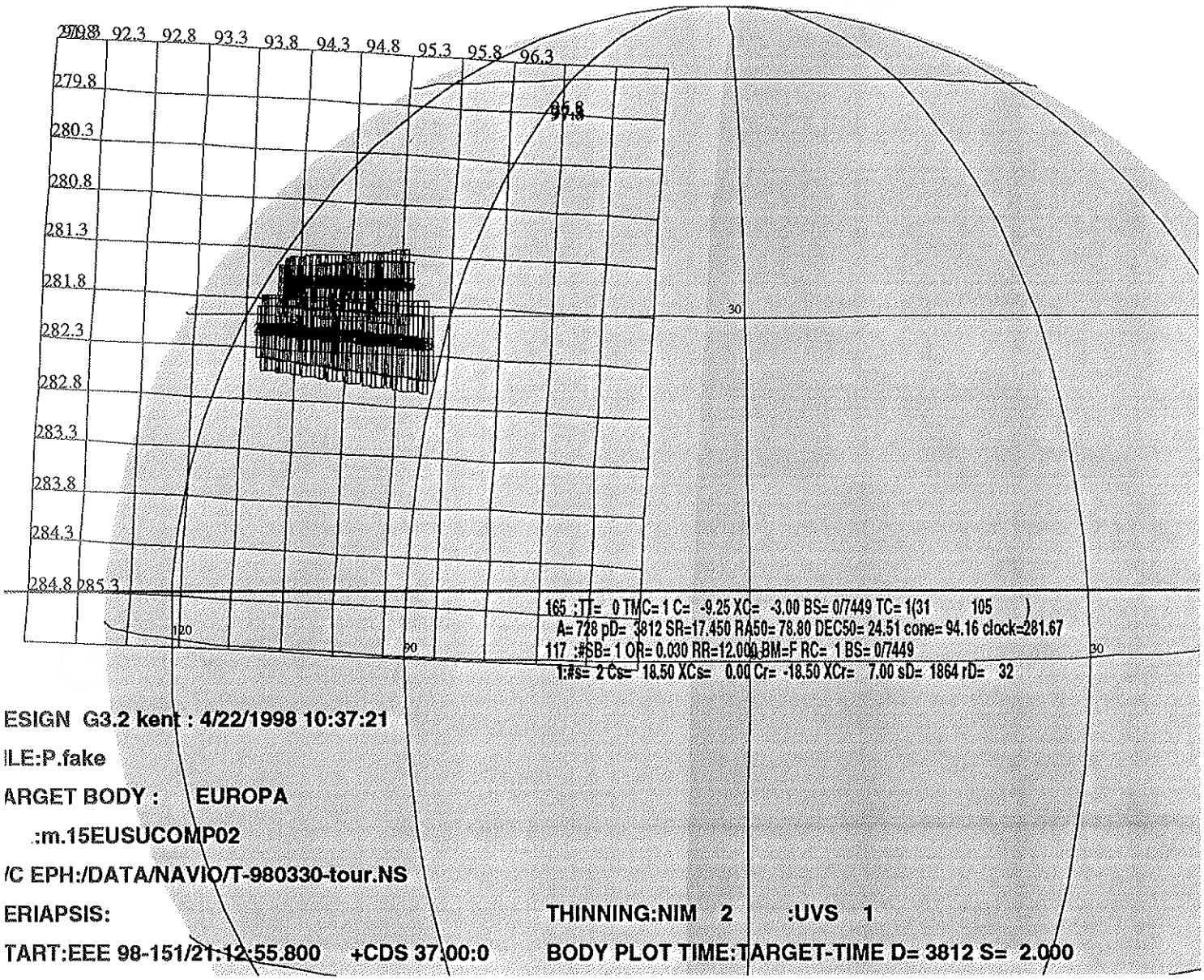

ESIGN G3.2 kent : 4/22/1998 10:37:21

ILE:P.fake

ARGET BODY : EUROPA

:m.15EUSUCOMP02

/C EPH:/DATA/NAVIO/T-980330-tour.NS

ERIAPSIS: THINNING:NIM 2 :UVS 1

TART:EEE 98-151/21:12:55.800 +CDS 37 00:0 BODY PLOT TIME:TARGET-TIME D= 3812 S= 2.000

Activity ID:	**Orbit** 15	**OAPEL** EUSUCOMP		**SeqNo** 03+	
Title	r/a Europa Surface Composition			**Instrument**	UVS
Requestor	UVS-SWG/W. SWEET X30523	**Team**	UVS	**Working Group**	SWG

Time System	CDS	**Load ID**	15A	**Calendar Date**	05/31/98 Week 22

Start	EEE+CDS 00000069:00:0	98-151/22:22:41.800	EEE+000/01:09:46.000
End	EEE+CDS 00000079:00:0	98-151/22:32:48.466	EEE+000/01:19:52.666
Duration	00000010:00:0	000/00:10:06.666	000/00:10:06.666

Top Label	15EUSUCOMP03+				
Bottom Label	NIMS ride-along				
Plot Key	UVS	**Type**	SCI		
CDS Bytes	38	**Report Options**	BOTH	**Scan Platform**	Yes
CDS Source	OAP	**Spin State**	DUAL	**DMS**	Yes

Observation Objective

15EUSUCOMP03: Ride-along with NIMS 15ENSUCOMP02 observation to observe Europa in the 1600A - 3200 A wavelength regions at phase angles not obtainable from Earth. Data will supplement and complement the NIMS surface property measurements.

Rj = 9.2
UVS configuration: full F/F scans.

((1008 bps) * (10 RIMs)) * 0.333 (compression) = 0.208 mbtg

[waiver G-15 for inside 13 Rj]

Design Detail

CDS	RIM	COMMAND	PARAMETERS	PSID
0	000	COMMENT	UVS RIM 0	(384CJ)
38	-01	CMDRS		(157CJ)
	000	1	34UVS,07,S,N,N,N,S,0, ON,OFF,OFF, ON,OFF,NOOVR,1,00,9C,00,00	
	010	11	34UVS,C1,F,N,N,N,S,0,OFF,OFF, ON,OFF,OFF,NOOVR,1,2C,05,00,00	

Mon May 4 22:56:22 1998

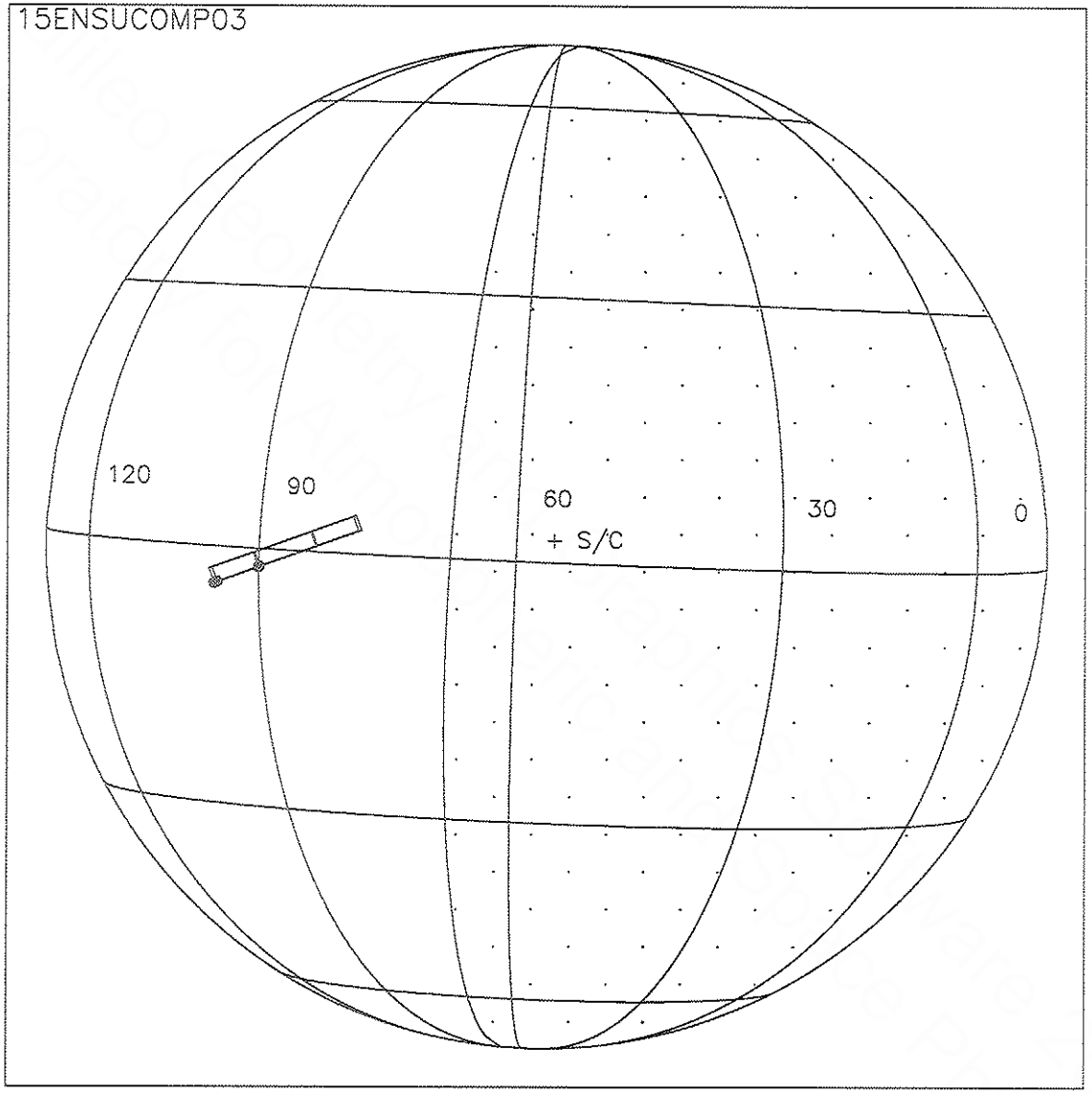

Start UTC_TIME : 1998-151 // 22:22:36.396
No End Time :
Start SCLK : 1/04499749:00:0:0

Target Body : EUROPA
Target Ra/Dec : 82.27/ 23.33 Deg
S/C to Body Center : 27210.52 Km (17.386916 Re)
Z-axis Pointing (Ra / Dec) : 175.44 / 4.46 Deg

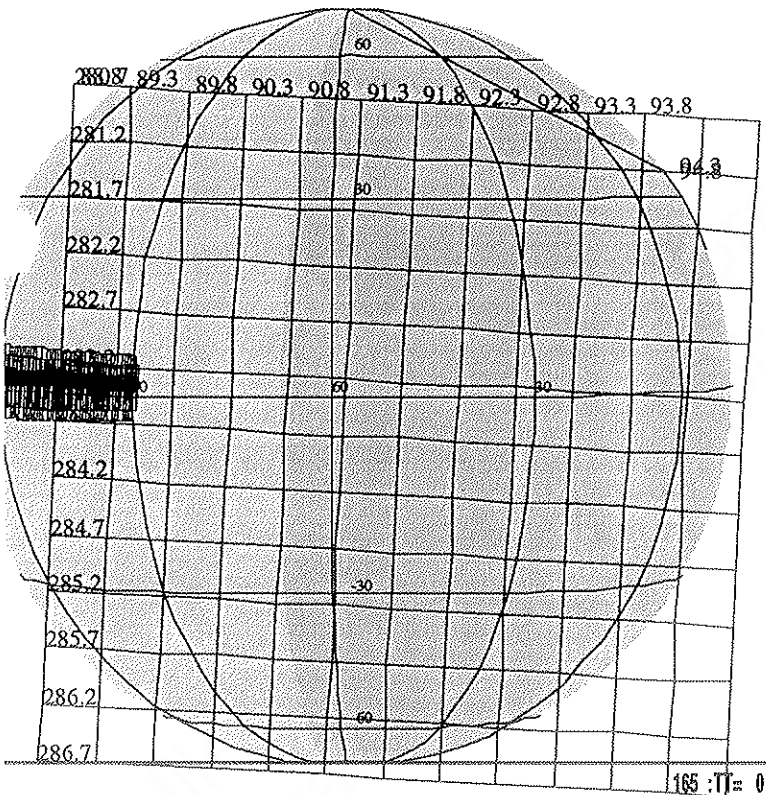

165 :TT= 0 TMC= 1 C= 0.00 XC= 0.00 BS= 0/3273 TC= 1(1 90)
A= 728 pD= 1810 SR=17.450 RA50= 84.14 DEC50= 23.30 cone= 89.42 clock=283.35
117 :#SB= 1 OR= 0.030 RR=12.000 BM=F RC= 1 BS= 0/3273
1:#s= 1 Cs= -18.10 XCs= 0.00 Cr= 0.00 XCr= 0.00 sD= 1820 rD= 2

ESIGN G3.2 kent : 4/22/1998 10:37:57

ILE:P.fake

ARGET BODY : EUROPA

:m.15EUSUCOMP03

/C EPH:/DATA/NAVIO/T-980330-tour.NS

ERIAPSIS: THINNING:NIM 2 :UVS 1

TART:EEE 98-151/21:12:55.800 +CDS 69:00:0 BODY PLOT TIME:TARGET-TIME D= 1810 S= 1.000

Activity ID:	**Orbit** 15	**OAPEL** IUHRSPEC		**SeqNo**	02+
Title	Io hi-res Surface Observation			**Instrument**	UVS
Requestor	UVS-SWG/W. SWEET X30523	**Team**	UVS	**Working Group**	SWG

Time System	CDS	**Load ID**	15A	**Calendar Date**	05/31/98 Week 22
Start	JEE-CDS 00000203:00:0	98-151/23:09:12.467		JEE-000/03:25:15.333	
End	JEE-CDS 00000180:00:0	98-151/23:32:27.800		JEE-000/03:02:00.000	
Duration	00000023:00:0	000/00:23:15.333		000/00:23:15.333	

Top Label	15IUHRSPEC02+				
Bottom Label	NIMS ride-along				
Plot Key	UVS	**Type**	SCI		
CDS Bytes	38	**Report Options**	BOTH	**Scan Platform**	Yes
CDS Source	OAP	**Spin State**	DUAL	**DMS**	Yes

Observation Objective

15IUHRSPEC02: Ride-along with the NIMS 15INHRSPEC02 observation to observe Io at high spectral resolution in the 1600 A to 3200A wavelength regions at phase angles not obtainable from the Earth. Data will supplement and complement the NIMS surface property measurements.

Rj = 10.6

UVS configuration: full scan F/F

((1008 bps) * (19 RIMs)) * 0.333 (compression) = 0.387 mbtg

[waiver G-15 for inside 13 Rj]

Design Detail

CDS	RIM	COMMAND	PARAMETERS	PSID
0	000	COMMENT	UVS RIM 0	(384CH)
38	003	CMDRS		(157CH)
	004	1	34UVS,07,S,N,N,N,S,0, ON,OFF,OFF, ON,OFF,NOOVR,1,00,9C,00,00	
	023	20	34UVS,C1,F,N,N,N,S,0,OFF,OFF, ON,OFF,OFF,NOOVR,1,2C,05,00,00	

Mon May 4 22:52:15 1998

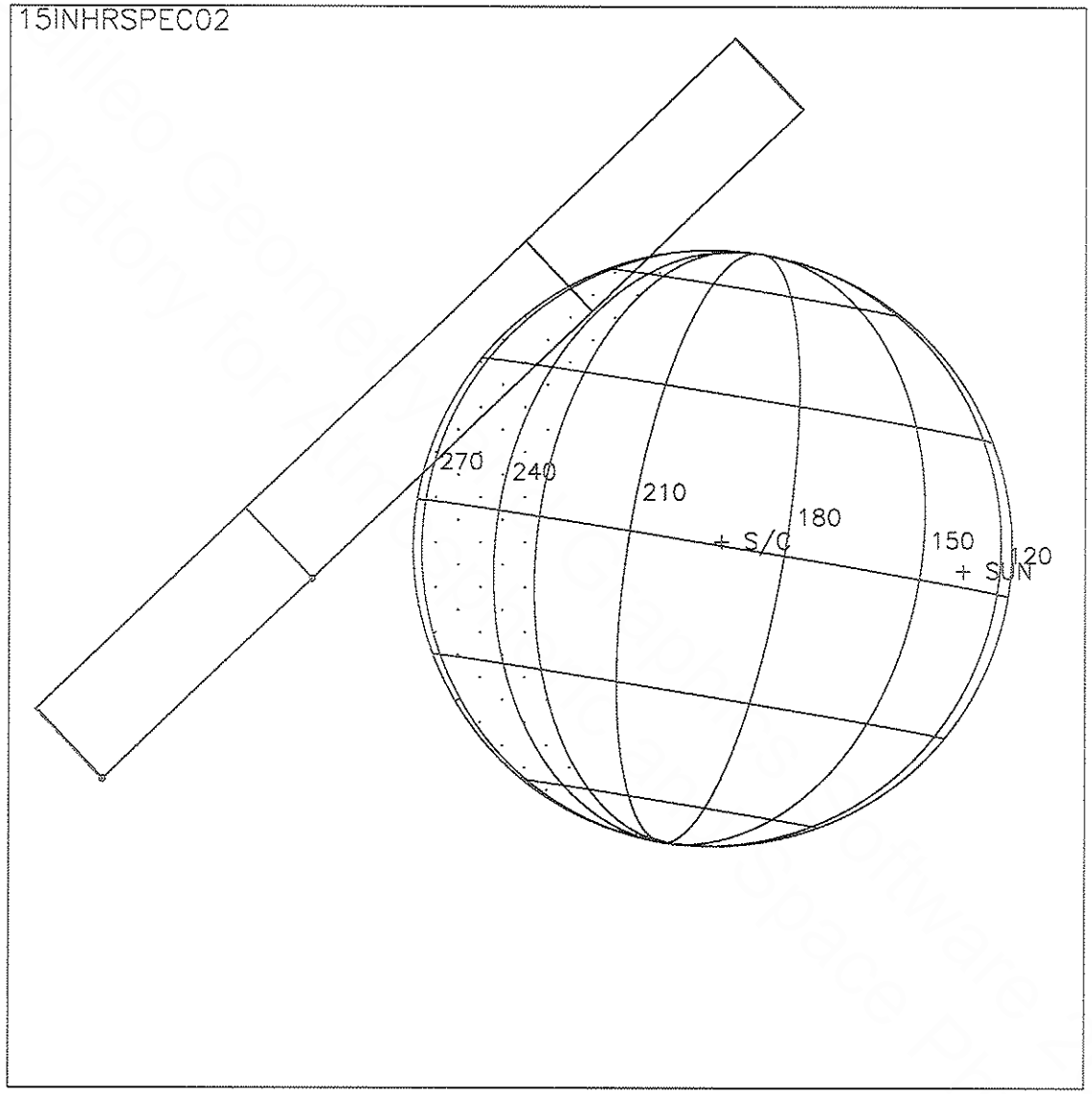

Start UTC_TIME : 1998-151 // 17:37:28.406
No End Time :
Start SCLK : 1/04499467:00:0:0

Target Body : IO
Target Ra/Dec : 289.95/-23.02 Deg
S/C to Body Center : 337690.3 Km (185.10173 Ri)
Z-axis Pointing (Ra / Dec) : 175.44 / 4.46 Deg

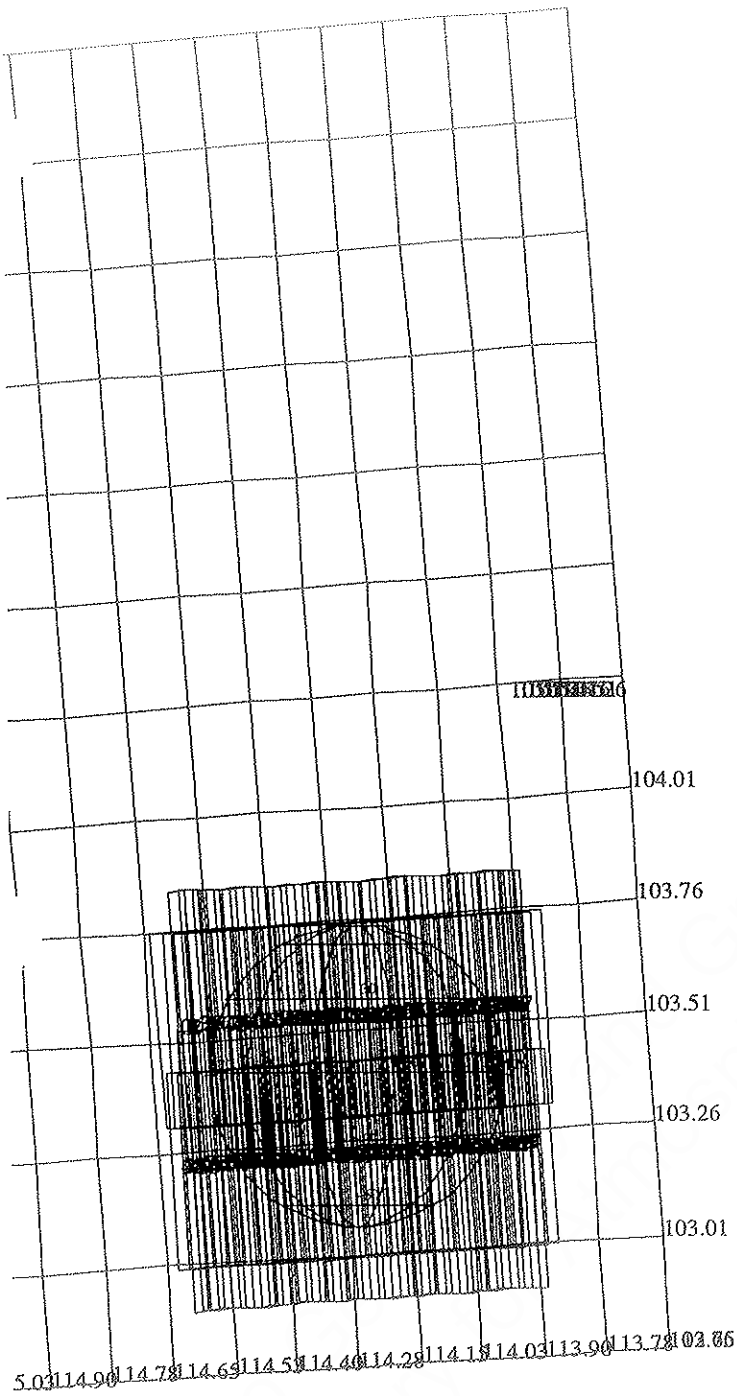

165 :TT= 0 TMC= 1 C= 6.00 XC= 2.00 BS= 0/1949 TC= 3
A= 728 pD= 2548 SR=17.450 RA50=290.28 DEC50=-22.88 cone=114.58 clock=103.53
117 :#SB= 1 OR= 0.030 RR=12.000 BM=F RC= 1 BS= 0/1949
1:#s= 2 Cs= -12.00 XCs= 0.00 Cr= 12.00 XCr= -5.00 sD= 1212 rD= 22

ESIGN G3.2 kent : 4/22/1998 10:36:44

ILE:P.fake

ARGET BODY : IO

:m.15IUHRSPEC02

/C EPH:/DATA/NAVIO/T-980330-tour.NS

ERIAPSIS: THINNING:NIM 1 :UVS 1

TART:IEE 98-151/20:58:46.466 -CDS 199:00:0 BODY PLOT TIME:TARGET-TIME D= 2548 S= 0.400

Activity ID:	**Orbit** 15	**OAPEL** EUGLOBAL		**SeqNo**	01+
Title	r/a Europa Global			**Instrument**	UVS
Requestor	UVS-SWG/W. SWEET X30523	**Team**	UVS	**Working Group**	SWG

Time System	CDS	**Load ID**	15A	**Calendar Date**	06/01/98
Week	22				

Start	EEE+CDS 00000300:00:0	98-152/02:16:15.800	EEE+000/05:03:20.000
End	EEE+CDS 00000334:00:0	98-152/02:50:38.466	EEE+000/05:37:42.666
Duration	00000034:00:0	000/00:34:22.666	000/00:34:22.666

Top Label	15EUGLOBAL01+				
Bottom Label	NIMS ride-along				
Plot Key	UVS	**Type**	SCI		
CDS Bytes	38	**Report Options**	BOTH	**Scan Platform**	Yes
CDS Source	OAP	**Spin State**	DUAL	**DMS**	Yes

Observation Objective

15EUGLOBAL01: Ride-along with NIMS 15ENGLOBAL01 observation to observe Europa in the 1600 A to 3200 A wavelength regions at phase angles not obtainable from Earth. Data will supplement and complement the NIMS surface property measurements.

Rj = 8.8
UVS configuration: full F/F scans.

((1008 bps) * (30 RIMs)) * 0.333 (compression) = 0.612 mbtg

[waiver G-14 for cone 82]
[waiver G-15 for inside 13 Rj]

Design Detail

CDS	RIM	COMMAND	PARAMETERS	PSID
0	000	COMMENT	UVS RIM 0	(384CK)
38	003	CMDRS		(157CK)
	004	1	34UVS,07,S,N,N,N,S,0, ON,OFF,OFF, ON,OFF,NOOVR,1,00,9C,00,00	
	034	31	34UVS,C1,F,N,N,N,S,0,OFF,OFF, ON,OFF,OFF,NOOVR,1,2C,05,00,00	

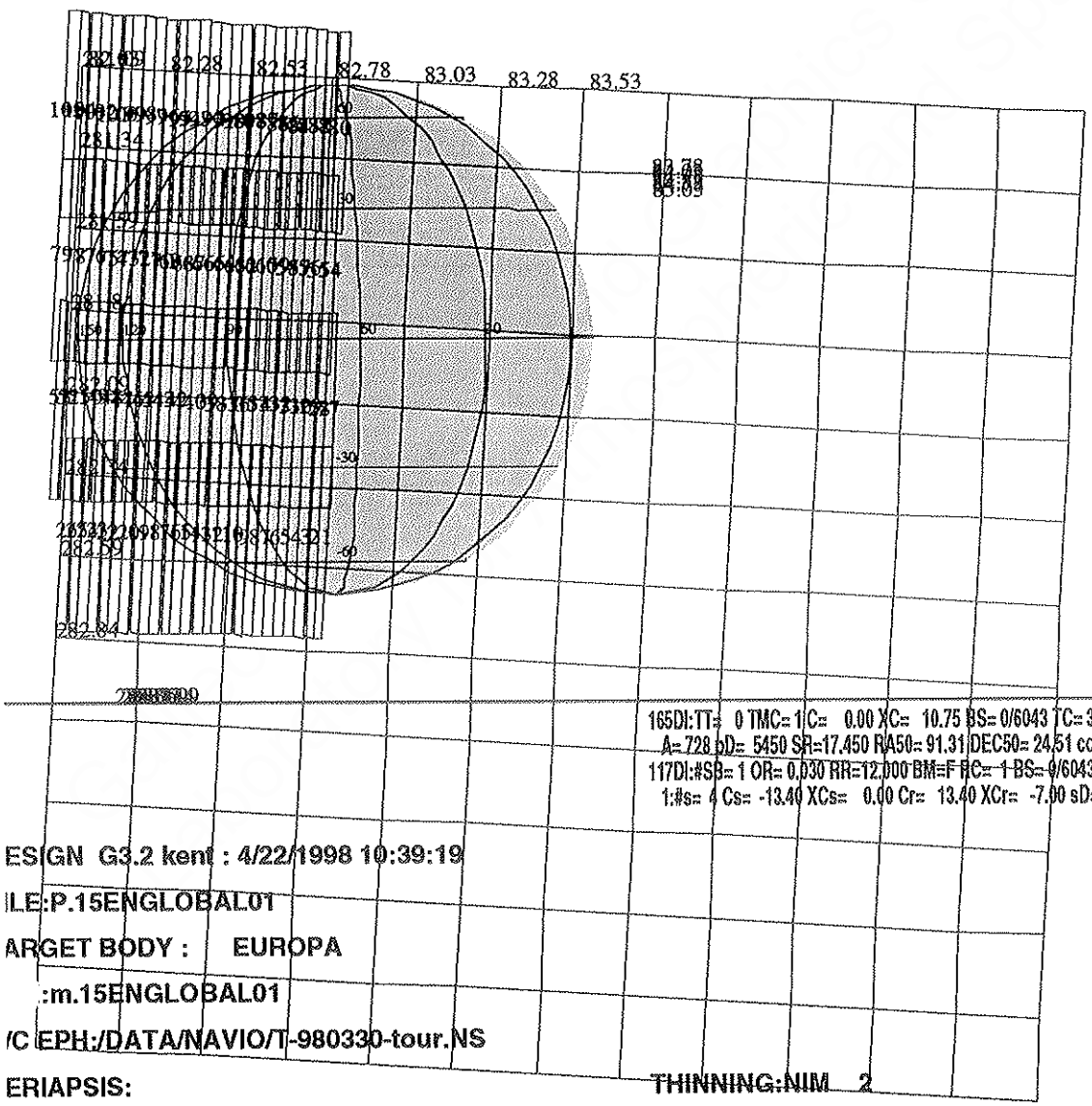

165DI:TT= 0 TMC= 1 C= 0.00 XC= 10.75 BS= 0/6043 TC= 3
A= 728 pD= 5450 SR=17.450 RA50= 91.31 DEC50= 24.51 cone= 82.82 clock=282.51
117DI:#SB= 1 OR= 0.030 RR=12.000 BM=F RC= 1 BS= 0/6043
1:#s= 4 Cs= -13.40 XCs= 0.00 Cr= 13.40 XCr= -7.00 sD= 1348 rD= 20

ESIGN G3.2 kent : 4/22/1998 10:39:19

ILE:P.15ENGLOBAL01

ARGET BODY : EUROPA

:m.15ENGLOBAL01

/C EPH:/DATA/NAVIO/T-980330-tour.NS

ERIAPSIS: THINNING:NIM 2

TART:EEE 98-151/21:12:55.800 +CDS 304:00:0 BODY PLOT TIME:TARGET-TIME D= 5450 S= 0.700

Activity ID: Orbit 15 **OAPEL** EUEUR16H **SeqNo** 01+

Title Europa Surface Observation **Instrument** UVS

Requestor UVS-SWG/W. SWEET X30523 **Team** UVS **Working Group** SWG

Time System CDS **Load ID** 15A **Calendar Date** 06/01/98 **Week** 22

Start	EEE+CDS 00000953:00:0	98-152/13:16:31.133	EEE+000/16:03:35.333
End	EEE+CDS 00000968:00:0	98-152/13:31:41.133	EEE+000/16:18:45.333
Duration	00000015:00:0	000/00:15:10.000	000/00:15:10.000

Top Label 15EUEUR16H01+

Bottom Label NIMS ride-along

Plot Key	UVS	**Type**	SCI		
CDS Bytes	38	**Report Options**	BOTH	**Scan Platform**	Yes
CDS Source	OAP	**Spin State**	DUAL	**DMS**	Yes

Observation Objective

15EUEUR16H01: Ride-along with the NIMS 15ENEUR16H01 observation to observe Europa at high spectral resolution in the 1600 A to 3200A wavelength regions at phase angles not obtainable from the Earth. Data will supplement and complement the NIMS surface property measurements.

Rj = 8.5

UVS configuration: full scan F/F

((1008 bps) * (10 RIMs)) * 0.333 (compression) = 0.204 mbtg

[waiver G-14 for cone 76]
[waiver G-15 for inside 13 Rj]

Design Detail

CDS	RIM	COMMAND	PARAMETERS	PSID
0	000	COMMENT	UVS RIM 0	(384CX)
38	003	CMDRS		(157CL)
	004	1	34UVS,07,S,N,N,N,S,0, ON,OFF,OFF, ON,OFF,NOOVR,1,00,9C,00,00	
	016	13	34UVS,C1,F,N,N,N,S,0,OFF,OFF, ON,OFF,OFF,NOOVR,1,2C,05,00,00	

Mon May 4 22:57:47 1998

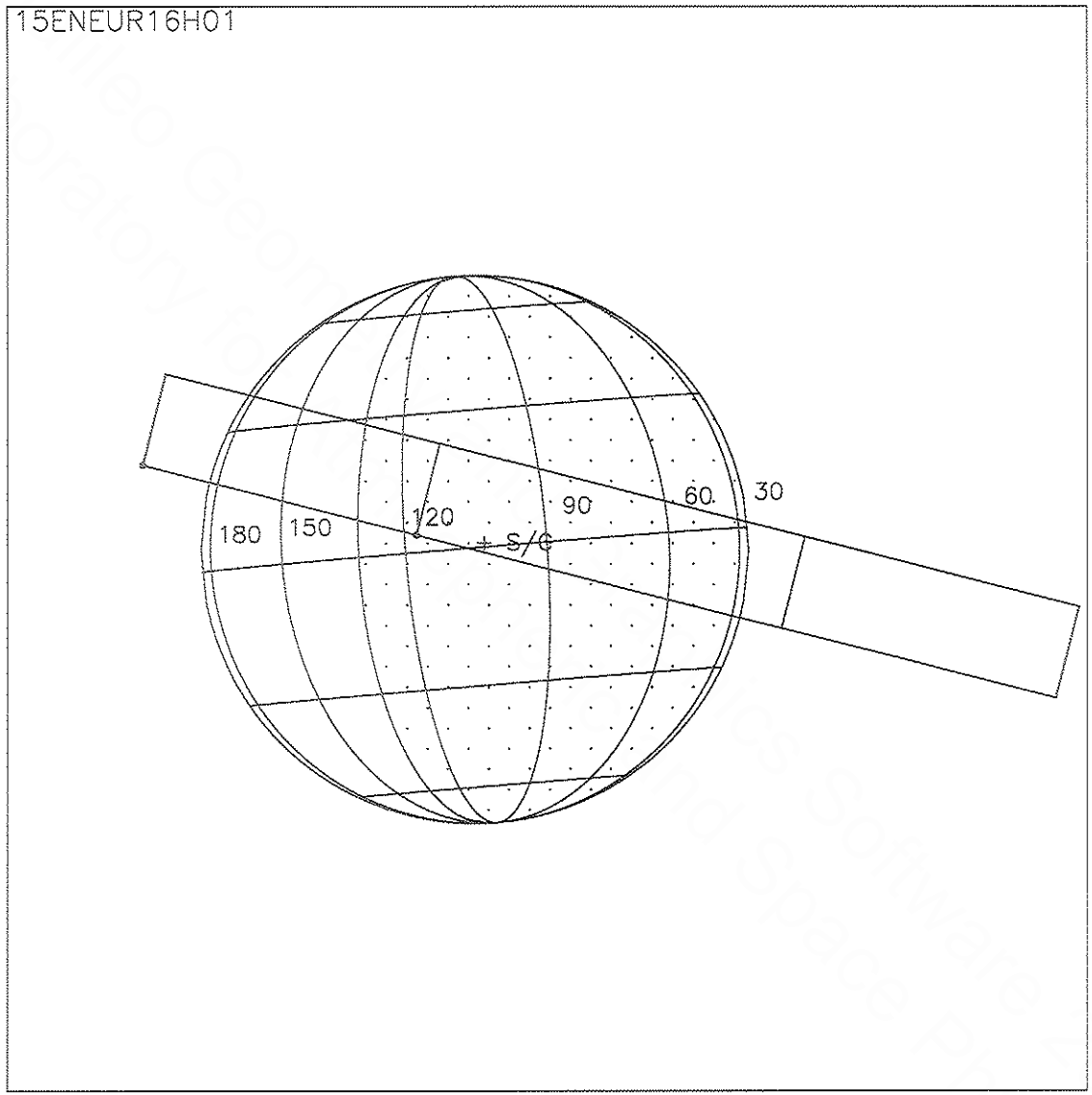

Start UTC_TIME : 1998-152 // 13:20:28.363
No End Time :
Start SCLK : 1/04500637:00:0:0

Target Body : EUROPA
Target Ra/Dec : 98.60/ 25.16 Deg
S/C to Body Center : 308150.1 Km (196.90105 Re)
Z-axis Pointing (Ra / Dec) : 175.44 / 4.46 Deg

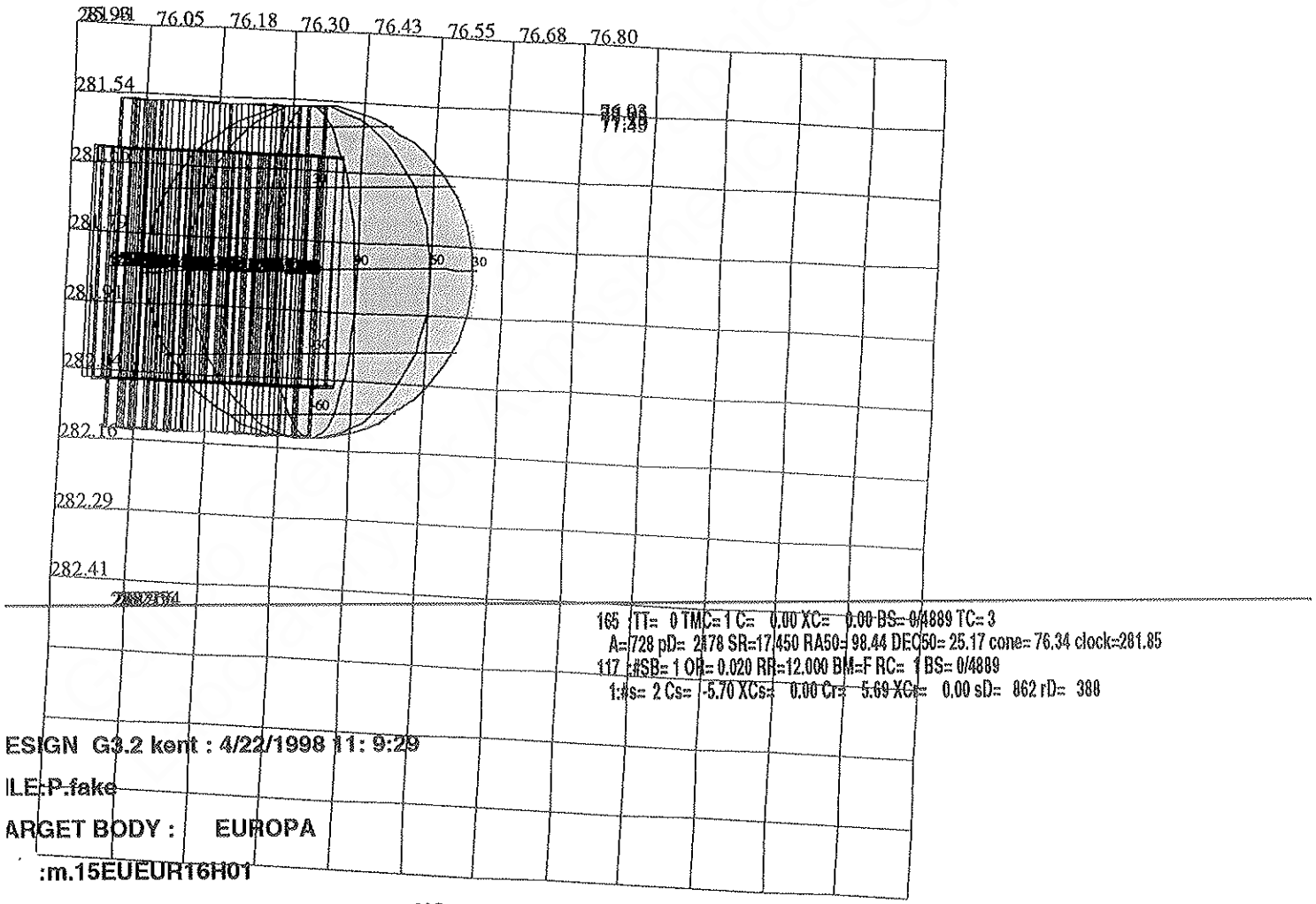

165 :TT= 0 TMC=1 C= 0.00 XC= 0.00 BS= 0/4889 TC= 3
A=728 pD= 2178 SR=17.450 RA50= 98.44 DEC50= 25.17 cone= 76.34 clock=281.85
117 :#SB= 1 OR= 0.020 RR=12.000 BM=F RC= 1 BS= 0/4889
1:#s= 2 Cs= -5.70 XCs= 0.00 Cr= 5.69 XCr= 0.00 sD= 862 rD= 388

ESIGN G3.2 kent : 4/22/1998 11: 9:29

ILE:P.fake

ARGET BODY : EUROPA

:m.15EUEUR16H01

/C EPH:/DATA/NAVIO/T-980330-tour.NS

ERIAPSIS: THINNING:NIM 2 :UVS 1

TART:EEE 98-151/21:12:55.800 +CDS 957:00:0 BODY PLOT TIME:TARGET-TIME D= 2178 S= 0.500

Activity ID: Orbit 15 OAPEL EUEUR20H SeqNo 01+

Title Europa Surface Observation **Instrument** UVS

Requestor UVS-SWG/W. SWEET X30523 **Team** UVS **Working Group** SWG

Time System CDS **Load ID** 15A **Calendar Date** 06/01/98 **Week** 22

Start	EEE+CDS 00001220:00:0	98-152/17:46:29.133	EEE+000/20:33:33.333
End	EEE+CDS 00001236:00:0	98-152/18:02:39.800	EEE+000/20:49:44.000
Duration	00000016:00:0	000/00:16:10.667	000/00:16:10.667

Top Label 15EUEUR20H01+

Bottom Label NIMS ride-along

Plot Key	UVS	**Type**	SCI		
CDS Bytes	38	**Report Options**	BOTH	**Scan Platform**	Yes
CDS Source	OAP	**Spin State**	DUAL	**DMS**	Yes

Observation Objective

15EUEUR20H01: Ride-along with the NIMS 15ENEUR20H01 observation to observe Europa at high spectral resolution in the 1600 A to 3200A wavelength regions at phase angles not obtainable from the Earth. Data will supplement and complement the NIMS surface property measurements.

Rj = 8.5

UVS configuration: full scan F/F

((1008 bps) * (9 RIMs)) * 0.333 (compression) = 0.183 mbtg

[waiver G-14 for cone 80]
[waiver G-15 for inside 13 Rj]

Design Detail

CDS	RIM	COMMAND	PARAMETERS	PSID
0	000	COMMENT	UVS RIM 0	(384CY)
38	003	CMDRS		(157CM)
	004	1	34UVS,07,S,N,N,N,S,0, ON,OFF,OFF, ON,OFF,NOOVR,1,00,9C,00,00	
	015	12	34UVS,C1,F,N,N,N,S,0,OFF,OFF, ON,OFF,OFF,NOOVR,1,2C,05,00,00	

Mon May 4 22:59:15 1998

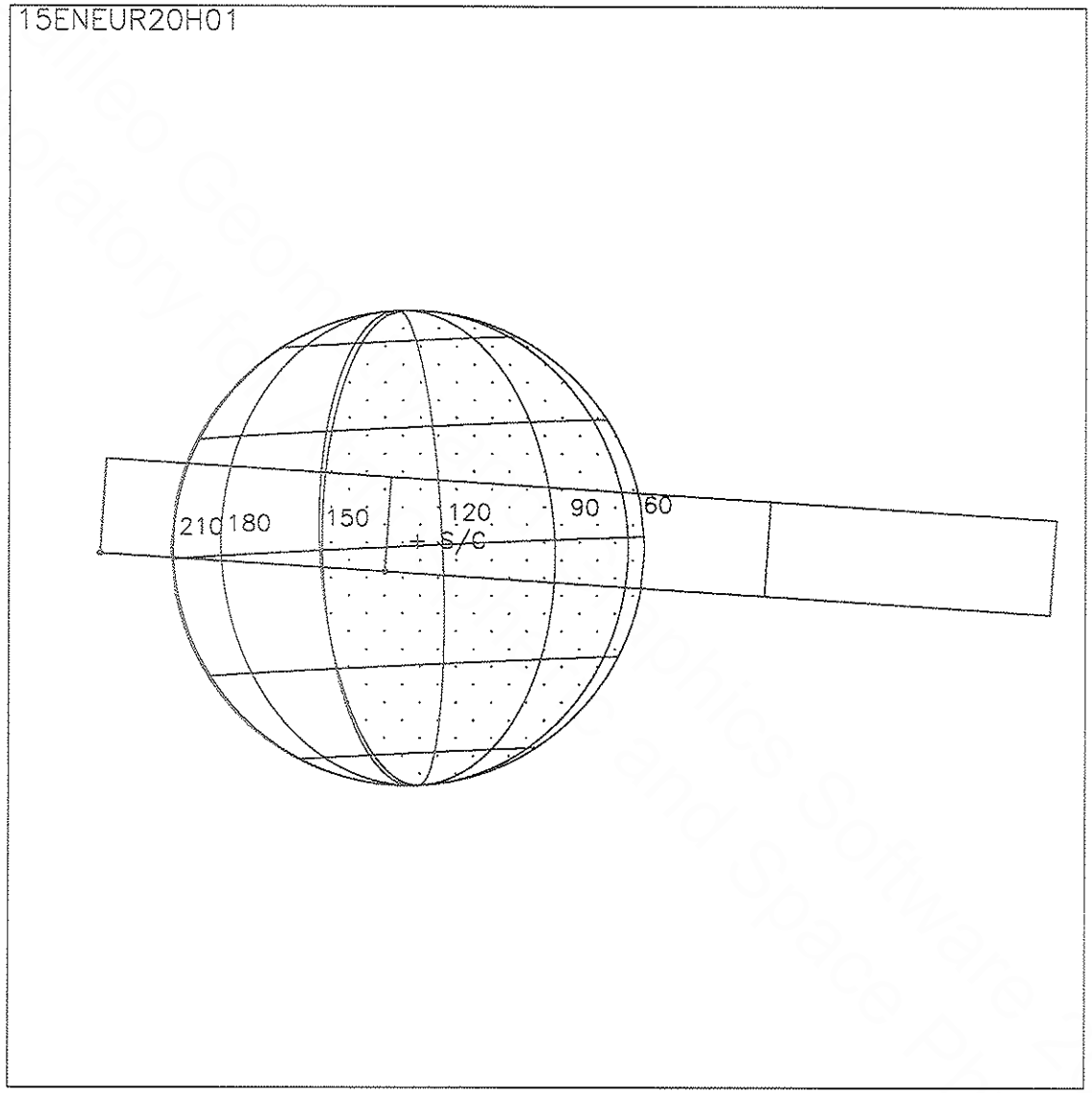

Start UTC_TIME : 1998-152 // 17:50:26.354
No End Time :
Start SCLK : 1/04500904:00:0:0

Target Body : EUROPA
Target Ra/Dec : 94.19/ 25.46 Deg
S/C to Body Center : 359436.5 Km (229.67186 Re)
Z-axis Pointing (Ra / Dec) : 175.44 / 4.46 Deg

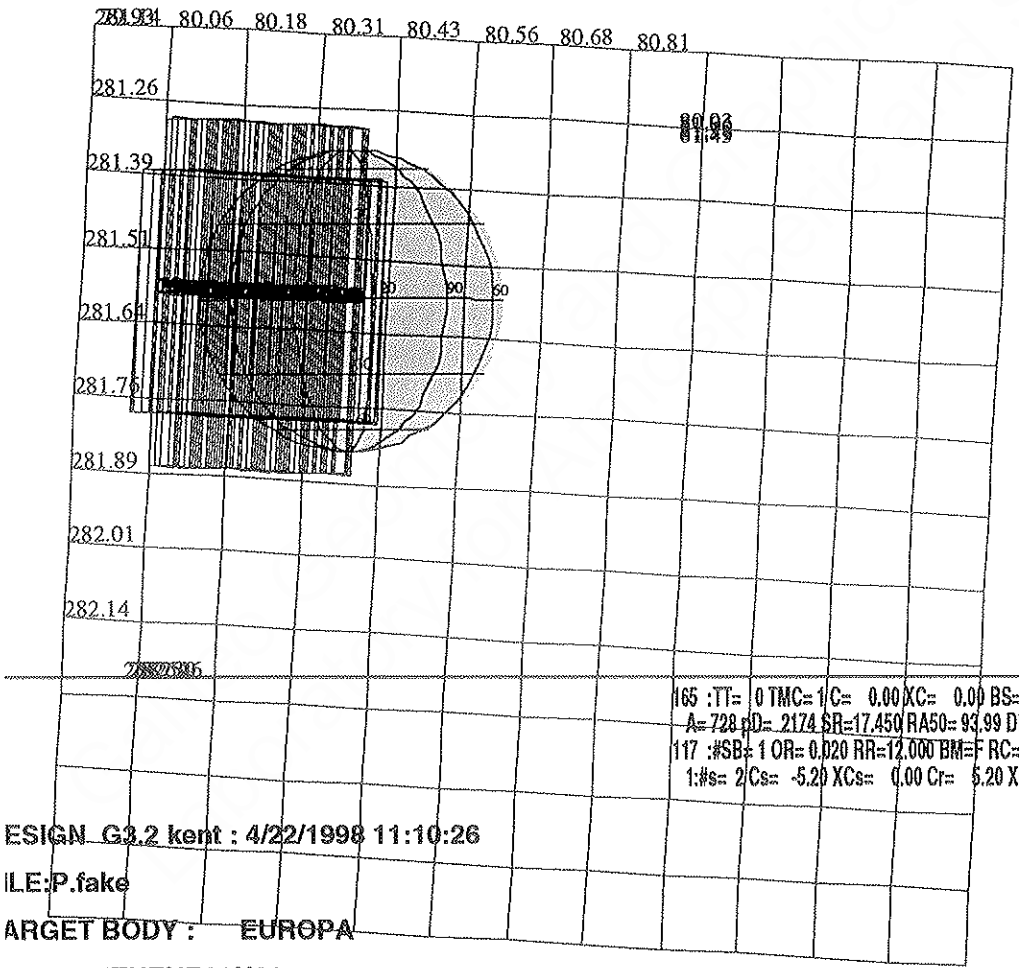

165 :TT= 0 TMC= 1 C= 0.00 XC= 0.00 BS= 0/3483 TC= 3
A= 728 pD= 2174 SR=17.450 RA50= 93.99 DEC50= 25.47 cone= 80.37 clock=281.58
117 :#SB= 1 OR= 0.020 RR=12.000 BM=F RC= 1 BS= 0/3483
1:#s= 2 Cs= -5.20 XCs= 0.00 Cr= 5.20 XCr= 0.00 sD= 792 rD= 388

ESIGN G3.2 kent : 4/22/1998 11:10:26

ILE:P.fake

ARGET BODY : EUROPA

:m.15EUEUR20H01

/C EPH:/DATA/NAVIO/T-980330-tour.NS

ERIAPSIS: THINNING:NIM 2 :UVS 1

TART:EEE 98-151/21:12:55.800 +CDS 1224:00:0 BODY PLOT TIME:TARGET-TIME D= 2174 S= 0.400

Activity ID:	Orbit 15	OAPEL EUEUR22H		SeqNo 01+	
Title	Europa Surface Observation			**Instrument**	UVS
Requestor	UVS-SWG/W. SWEET X30523	**Team**	UVS	**Working Group**	SWG

Time System	CDS	**Load ID**	15A	**Calendar Date**	06/01/98 Week 22

Start	EEE+CDS 00001294:00:0	98-152/19:01:18.466	EEE+000/21:48:22.666
End	EEE+CDS 00001310:00:0	98-152/19:17:29.133	EEE+000/22:04:33.333
Duration	00000016:00:0	000/00:16:10.667	000/00:16:10.667

Top Label	15EUEUR22H01+				
Bottom Label	NIMS ride-along				
Plot Key	UVS	**Type**	SCI		
CDS Bytes	38	**Report Options**	BOTH	**Scan Platform**	Yes
CDS Source	OAP	**Spin State**	DUAL	**DMS**	Yes

Observation Objective

15EUEUR22H01: Ride-along with the NIMS 15ENEUR22H01 observation to observe Europa at high spectral resolution in the 1600 A to 3200A wavelength regions at phase angles not obtainable from the Earth. Data will supplement and complement the NIMS surface property measurements.

Rj = 8.5

UVS configuration: full scan F/F

((1008 bps) * (8 RIMs)) * 0.333 (compression) = 0.163 mbtg

[waiver G-14 for cone 82]
[waiver G-15 for inside 13 Rj]

Design Detail

CDS	RIM	COMMAND	PARAMETERS	PSID
0	000	COMMENT	UVS RIM 0	(384CZ)
38	003	CMDRS		(157CN)
	004	1	34UVS,07,S,N,N,N,S,0, ON,OFF,OFF, ON,OFF,NOOVR,1,00,9C,00,00	
	015	12	34UVS,C1,F,N,N,N,S,0,OFF,OFF, ON,OFF,OFF,NOOVR,1,2C,05,00,00	

Mon May 4 23:00:47 1998

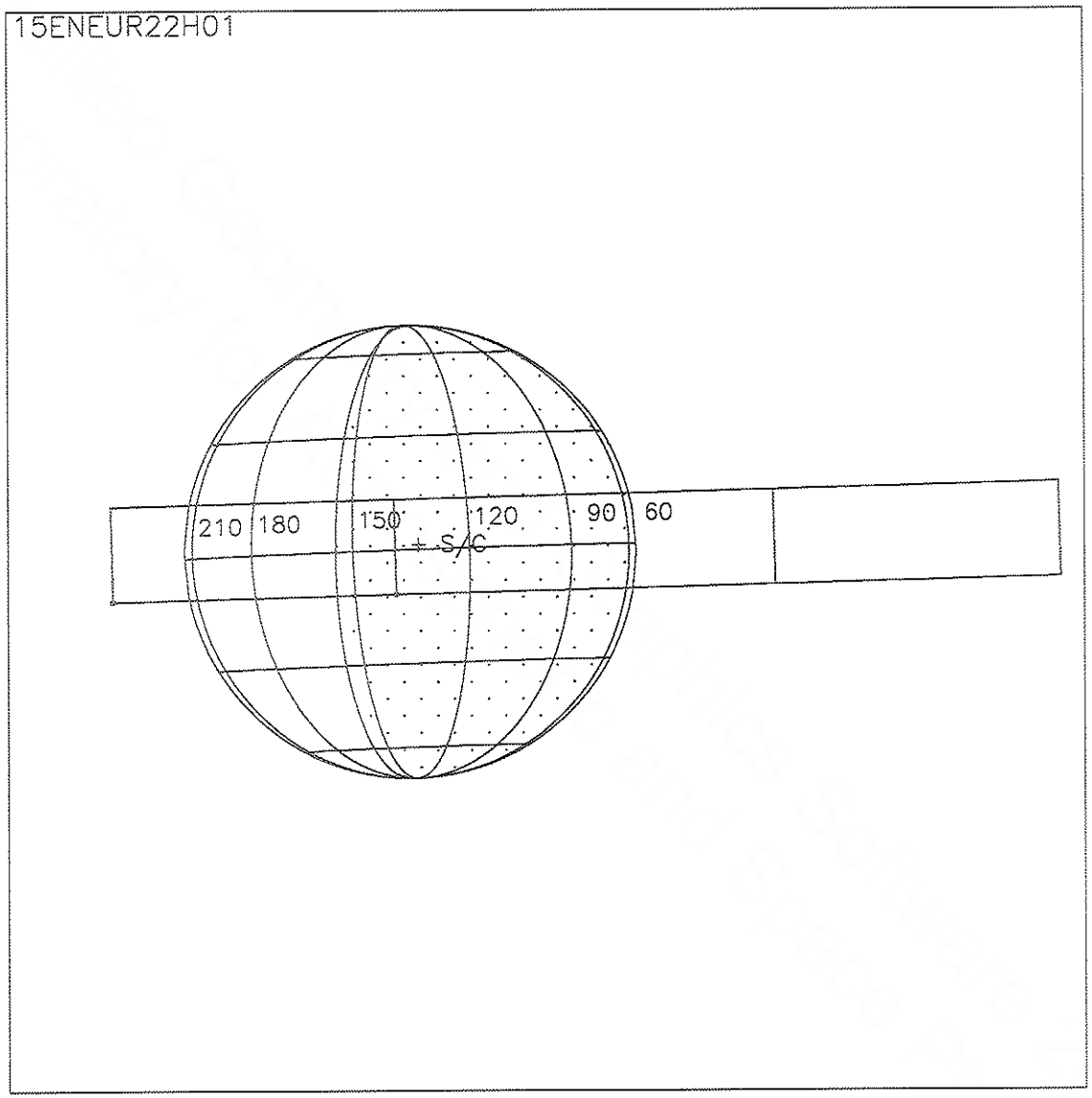

Start UTC_TIME : 1998-152 // 19:05:15.684
No End Time :
Start SCLK : 1/04500978:00:0:0

Target Body : EUROPA
Target Ra/Dec : 92.09/ 25.54 Deg
S/C to Body Center : 375203.5 Km (239.74667 Re)
Z-axis Pointing (Ra / Dec) : 175.44 / 4.46 Deg

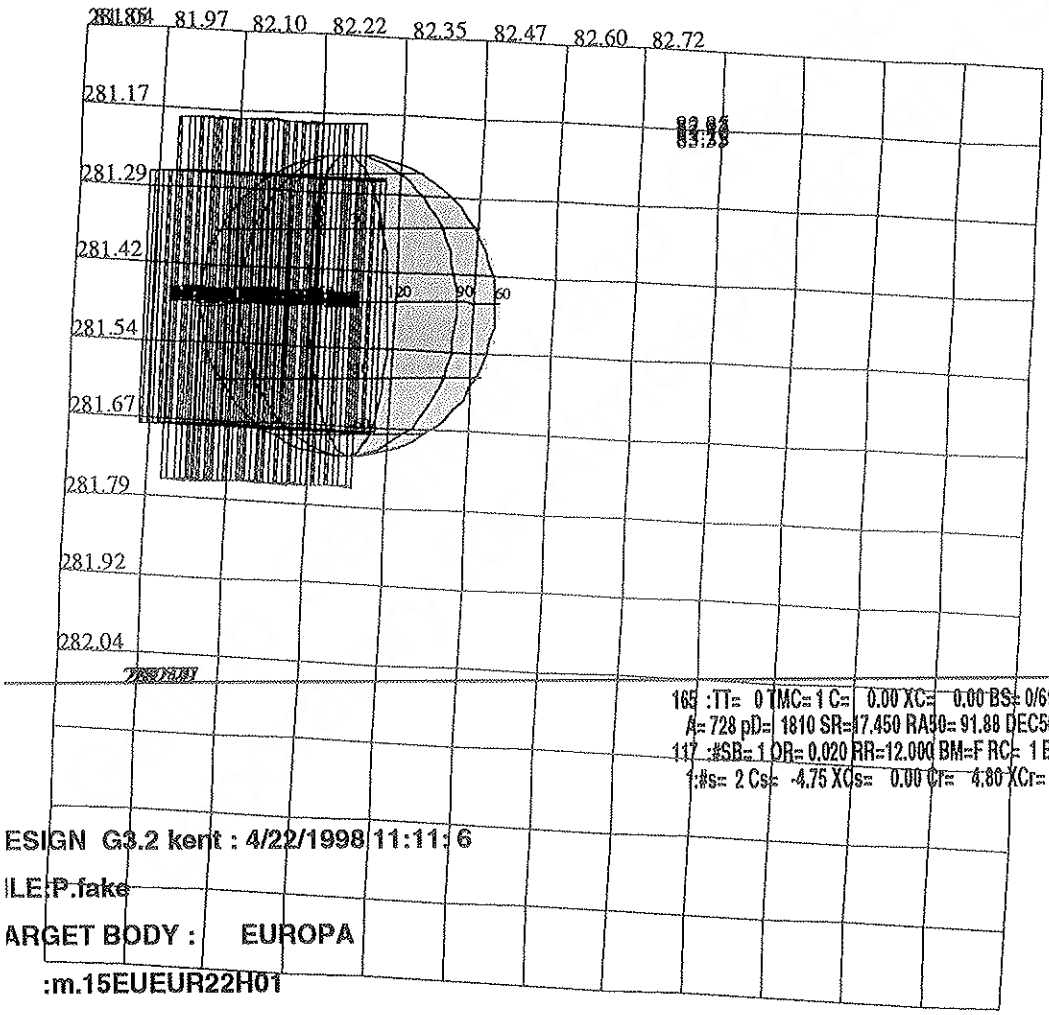

168 :TT= 0 TMC= 1 C= 0.00 XC= 0.00 BS= 0/6951 TC= 3
A= 728 pD= 1810 SR=17.450 RA50= 91.88 DEC50= 25.55 cone= 82.27 clock=281.47
117 :#SB= 1 OR= 0.020 RR=12.000 BM=F RC= 1 BS= 0/6951
1:#s= 2 Cs= -4.75 XCs= 0.00 Cr= 4.80 XCr= 0.00 sD= 716 rD= 388

ESIGN G3.2 kent : 4/22/1998 11:11: 6

ILE:P.fake

ARGET BODY : EUROPA

:m.15EUEUR22H01

/C EPH:/DATA/NAVIO/T-980330-tour.NS

ERIAPSIS: THINNING:NIM 2 :UVS 1

TART:EEE 98-151/21:12:55.800 +CDS 1298:00:0 BODY PLOT TIME:TARGET-TIME D= 1810 S= 0.400