Activity ID:	Orbit G1	OAPEL IUIECLPS		SeqNo 03-	
Title	UVS IO ECLIPSE (PRE-EGRESS)			**Instrument**	UVS
Requestor	UVS-SWG/K.NAVIAUX 37740	**Team**	UVS	**Working Group**	SWG

Time System	CDS	**Load ID**	G1A	**Calendar Date**	06/23/96 Week 25
Start	JEE-CDS 00005911:00:0	96-175/20:54:39.600		JEE-004/03:36:40.666	
End	JEE-CDS 00005858:00:0	96-175/21:48:14.933		JEE-004/02:43:05.333	
Duration	00000053:00:0	000/00:53:35.333		000/00:53:35.333	

Top Label	G1IUIECLPS03-				
Bottom Label	(real-time)				
Plot Key	UVS	**Type**	SCI		
CDS Bytes	130	**Report Options**	BOTH	**Scan Platform**	Yes
CDS Source	OAP	**Spin State**	DUAL	**DMS**	No

Observation Objective

UVS real-time Io Eclipse observation. Characterize the change in the lower atmospheric UV airglow emissions as Io enters and exits eclipse. Determine if the source of the change is due to: 1) a change in the lower atmospheric composition as it cools (ie. SO2 condensation); or 2) a potential change in the excitation mechanism if solar photoexcitation is dominant over particle impact.

G1IUIECLPS03- = Io eclipse pre-egress measurement. 1 scan-platform drift across Io in real-time (48 RIM 3-sigma drift rate) using the UVS 10bps RTS rate. Only 1 drift will be done prior to eclipse egress due to PWS time sharing.

UVS Configuration = F/G Full Scans

Design Detail

CDS	RIM	Command	Parameters	PSID
28	003	+UVFLUSH	DISCRD,UVS	(CE)
36	004	TARGET	(4 RIM Posn_Slew)	(CC)
38	003	CMDRS		(CC)
	004	1	34UVS,07,S,N,N,N,S,0, ON,OFF,	ON, ON,OFF,NOOVR,1,00,9C,01,2C
	052	49	34UVS,C1,F,N,N,N,S,0,OFF,OFF,	ON,OFF,OFF,NOOVR,1,2C,05,00,00
28	051	+UVFLUSH	PACKET,UVS	(CF)

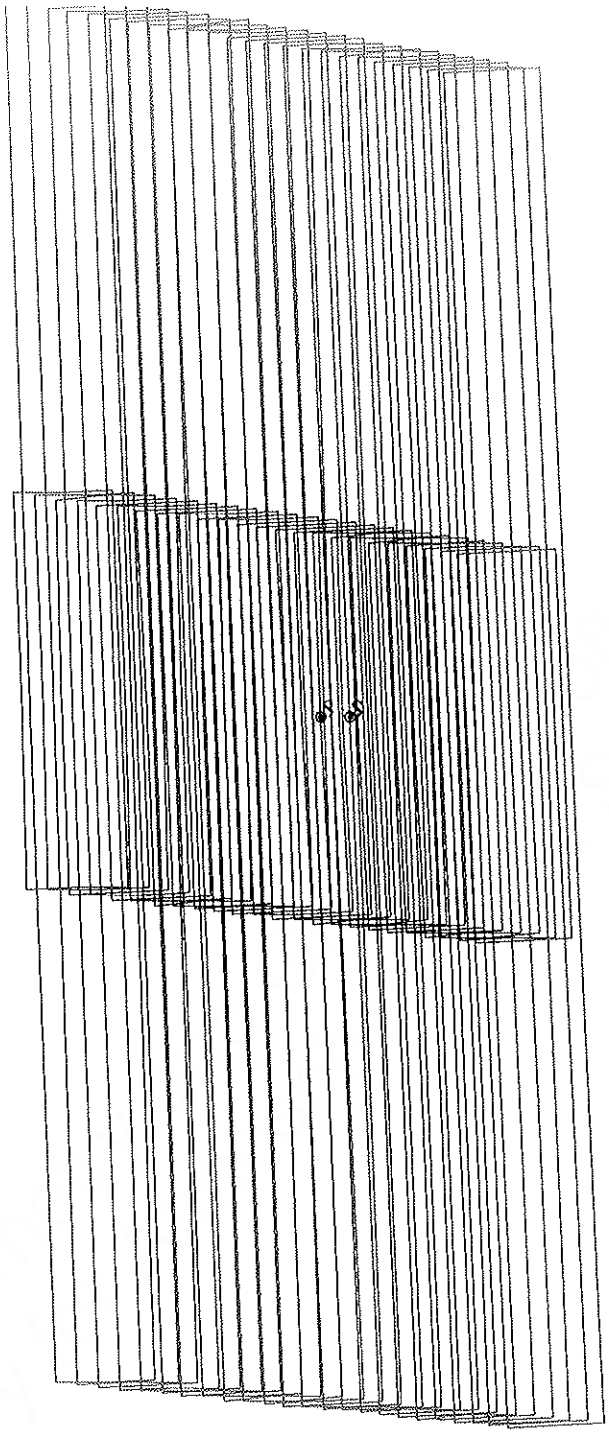

165CC:TT= 0 TMC= 1 C= 4.36 XC= 0.66 BS= 0/3758 TC= 9
A= 728 pD= 0 SR=17.430 RA50=210.56 DEC50= -8.89 cone=109.78 clock= 93.62

ARGET G1.0 brad : 2/28/1996 12:55: 7

ILE:P.G1IUIECLPS03

ARGET BODY : IO

INI:m.target.enc

: EPH:/DATA/NAVIO/T-960110-ALL.NS

ERIAPSIS: THINNING:NONE :UVS 1

TART:JEE 96-180/00:31:20.266 -CDS 5907:00:0 BODY PLOT TIME:TARGET-TIME D= 0 S= 0.040

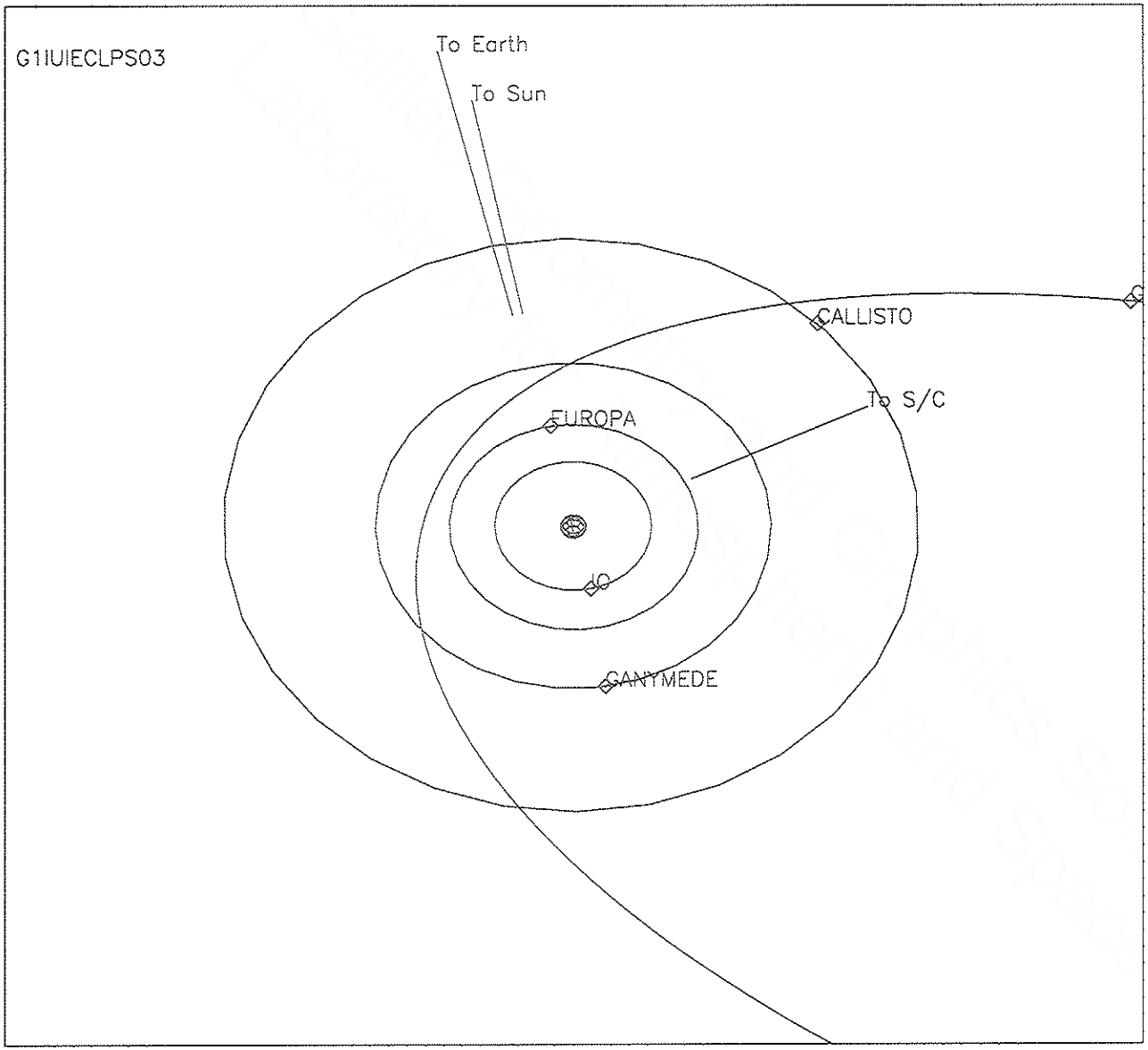

1996–175 // 20:54:39.000

28 days, 0.0 hours trajectory

Frame : 0

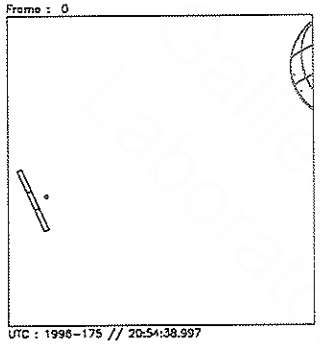

UTC : 1996-175 // 20:54:38.997
SCLK: 1/03492769:04:8:6

Frame : 1

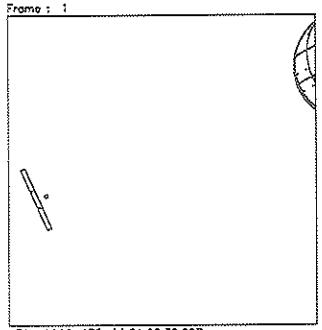

UTC : 1996-175 // 21:00:38.997
SCLK: 1/03492774:89:8:6

Frame : 2

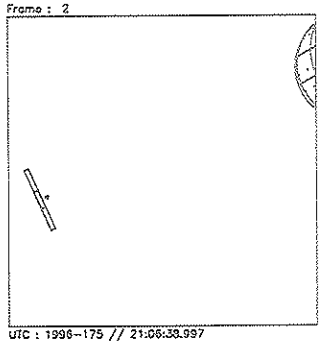

UTC : 1996-175 // 21:06:38.997
SCLK: 1/03492780:83:8:6

Frame : 3

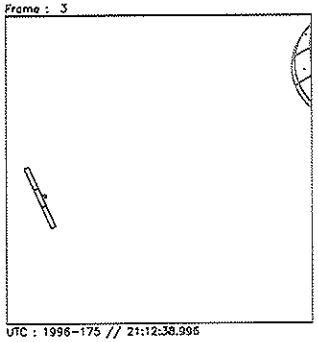

UTC : 1996-175 // 21:12:38.996
SCLK: 1/03492786:77:8:6

Frame : 4

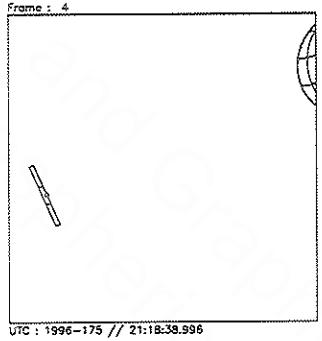

UTC : 1996-175 // 21:18:38.996
SCLK: 1/03492792:71:8:6

Frame : 5

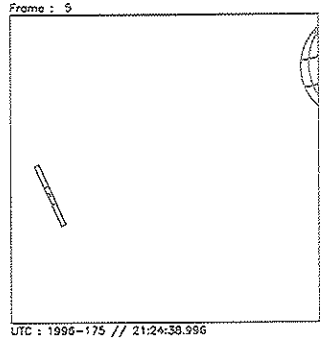

UTC : 1996-175 // 21:24:38.996
SCLK: 1/03492798:65:8:6

Frame : 6

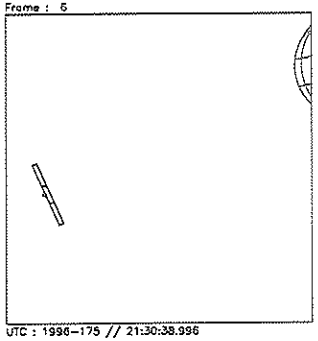

UTC : 1996-175 // 21:30:38.996
SCLK: 1/03492804:59:8:6

Frame : 7

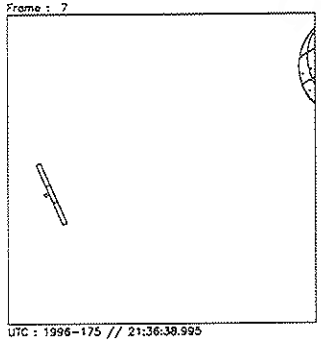

UTC : 1996-175 // 21:36:38.995
SCLK: 1/03492810:53:8:6

Frame : 8

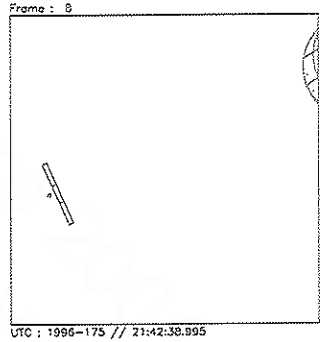

UTC : 1996-175 // 21:42:38.995
SCLK: 1/03492816:47:8:6

Start UTC_TIME : 1996-175 // 20:54:39.000
No End Time :
Start SCLK : 1/03492769:04:8:6

Target Body : IO
Target Cone/Clock : 109.49/ 93.58 Deg
S/C to Body Center : 3407975. Km (1868.0487 RI)
Z-axis Pointing (Ra / Dec) : 102.80 / 25.00 Deg

Frame : 0

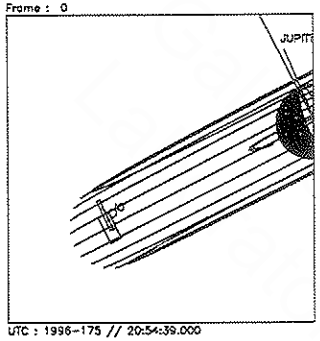

UTC : 1996-175 // 20:54:39.000
SCLK: 1/03492769:04:8:6

Frame : 1

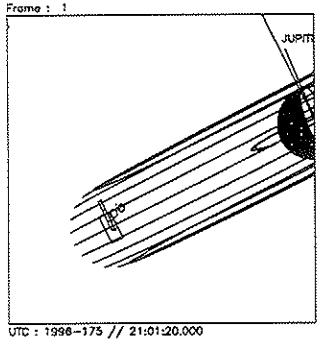

UTC : 1996-175 // 21:01:20.000
SCLK: 1/03492775:60:3:6

Frame : 2

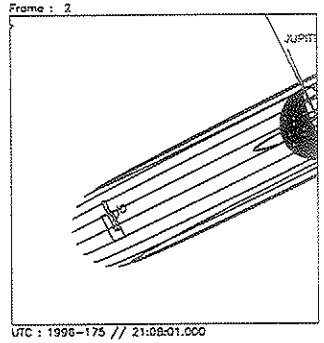

UTC : 1996-175 // 21:08:01.000
SCLK: 1/03492782:24:8:6

Frame : 3

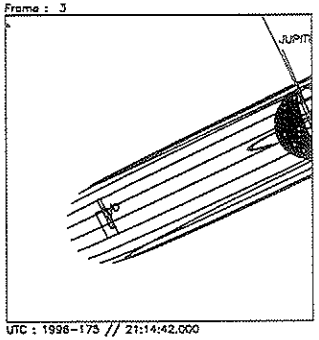

UTC : 1996-175 // 21:14:42.000
SCLK: 1/03492788:80:3:6

Frame : 4

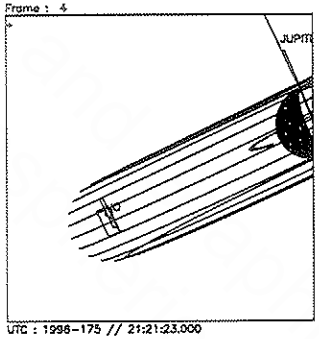

UTC : 1996-175 // 21:21:23.000
SCLK: 1/03492795:44:8:6

Frame : 5

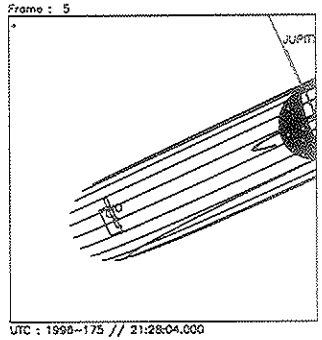

UTC : 1996-175 // 21:28:04.000
SCLK: 1/03492802:09:3:7

Frame : 6

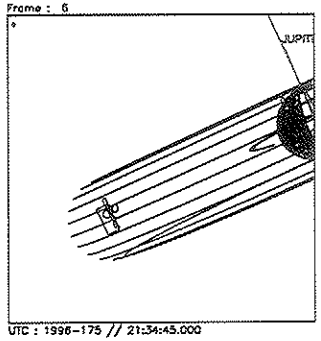

UTC : 1996-175 // 21:34:45.000
SCLK: 1/03492808:84:8:7

Frame : 7

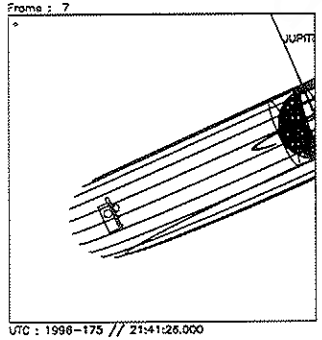

UTC : 1996-175 // 21:41:26.000
SCLK: 1/03492815:29:3:7

Frame : 8

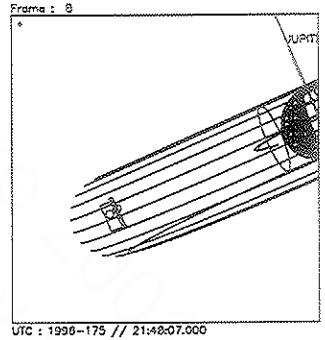

UTC : 1996-175 // 21:48:07.000
SCLK: 1/03492821:84:8:7

Start UTC_TIME : 1996-175 // 20:54:39.000
End UTC_TIME : 1996-175 // 21:48:14.000
Start SCLK : 1/03492769:04:8:6
Delta Time between FOV : 401.0000
FOVs : F Channel(0.1x0.4), N/G Channel(0.1x1.0)

Target Body : JUPITER
Target Cone/Clock : 102.55/ 93.53 Deg
S/C to Body Center : 3301168. Km (46.175347 Rj)
Z-axis Pointing (Ra / Dec) : 102.80 / 25.00 Deg

Activity ID:	Orbit G1	OAPEL IUIECLPS		**SeqNo**	04-
Title	UVS IO ECLIPSE (POST-EGRESS)			**Instrument**	UVS
Requestor	UVS-SWG/K.NAVIAUX 37740	**Team**	UVS	**Working Group**	SWG

Time System	CDS	**Load ID**	G1A	**Calendar Date**	06/23/96 Week 25
Start	JEE-CDS 00005857:00:0	96-175/21:49:15.600		JEE-004/02:42:04.666	
End	JEE-CDS 00005804:00:0	96-175/22:42:50.933		JEE-004/01:48:29.333	
Duration	00000053:00:0	000/00:53:35.333		000/00:53:35.333	

Top Label	G1IUIECLPS04-				
Bottom Label	(real-time)				
Plot Key	UVS	**Type**	SCI		
CDS Bytes	130	**Report Options**	BOTH	**Scan Platform**	Yes
CDS Source	OAP	**Spin State**	DUAL	**DMS**	No

Observation Objective

UVS real-time Io Eclipse observation. Characterize the change in the lower atmospheric UV airglow emissions as Io enters and exits eclipse. Determine if the source of the change is due to: 1) a change in the lower atmospheric composition as it cools (ie. SO2 condensation); or 2) a potential change in the excitation mechanism if solar photoexcitation is dominant over particle impact.

G1IUIECLPS04- = Io eclipse post-egress measurement. 1 scan-platform drift across Io in real-time (48 RIM 3-sigma drift rate) using the UVS 10bps RTS rate. Only 1 drift will be done after eclipse egress due to PWS time sharing.

UVS Configuration = F/G Full Scans

Design Detail

```
CDS RIM Command Parameters                                  PSID
--- --- ------- ----------                                  ----
28  003+UVFLUSH DISCRD,UVS                                  (CG)
36  004 TARGET  (4 RIM Posn_Slew)                           (CD)
38  003 CMDRS                                               (CD)
    004     1   34UVS,07,S,N,N,N,S,0, ON,OFF, ON, ON,OFF,NOOVR,1,00,9C,01,2C
    052    49   34UVS,C1,F,N,N,N,S,0,OFF,OFF, ON,OFF,OFF,NOOVR,1,2C,05,00,00
28  051+UVFLUSH PACKET,UVS                                  (CH)
```

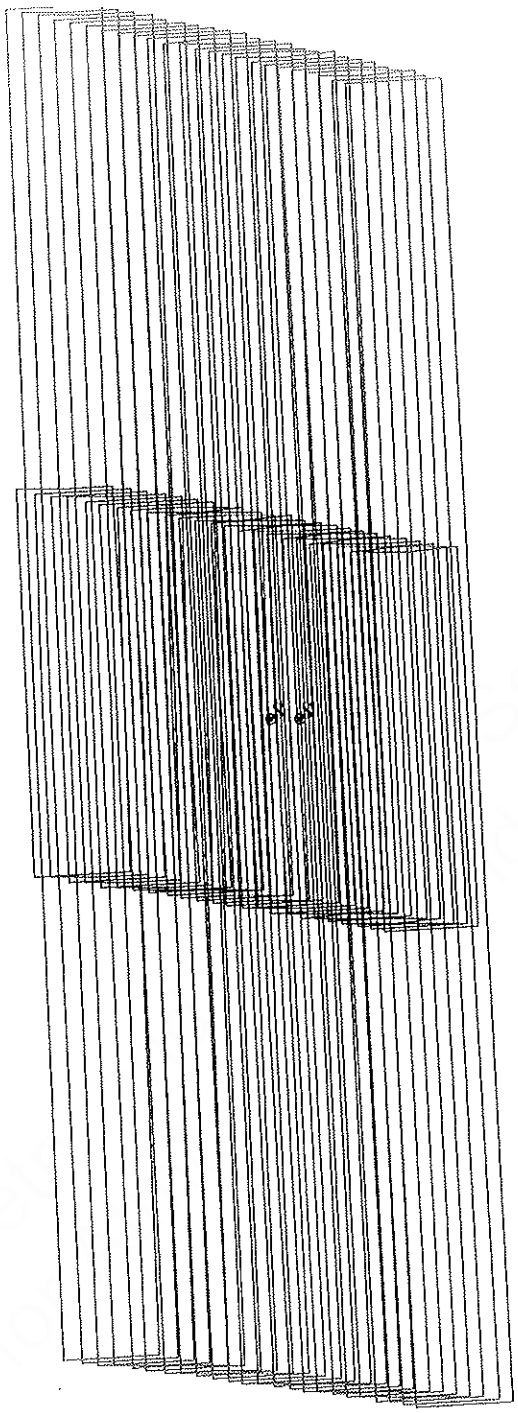

165CD:TT= 0 TMC= 1 C= 3.49 XC= 0.82 BS= 0/3586 TC= 9
A= 728 pD= 0 SR=17.430 RA50=211.04 DEC50= -8.99 cone=110.25 clock= 93.72

ARGET G1.0 brad : 2/28/1996 12:55: 7

ILE:P.G1IUIECLPS04

ARGET BODY : IO

INI:m.target.enc

: EPH:/DATA/NAVIO/T-960110-ALL.NS

ERIAPSIS: THINNING:NONE :UVS 1

TART:JEE 96-180/00:31:20.266 -CDS 5853:00:0 BODY PLOT TIME:TARGET-TIME D= 0 S= 0.040

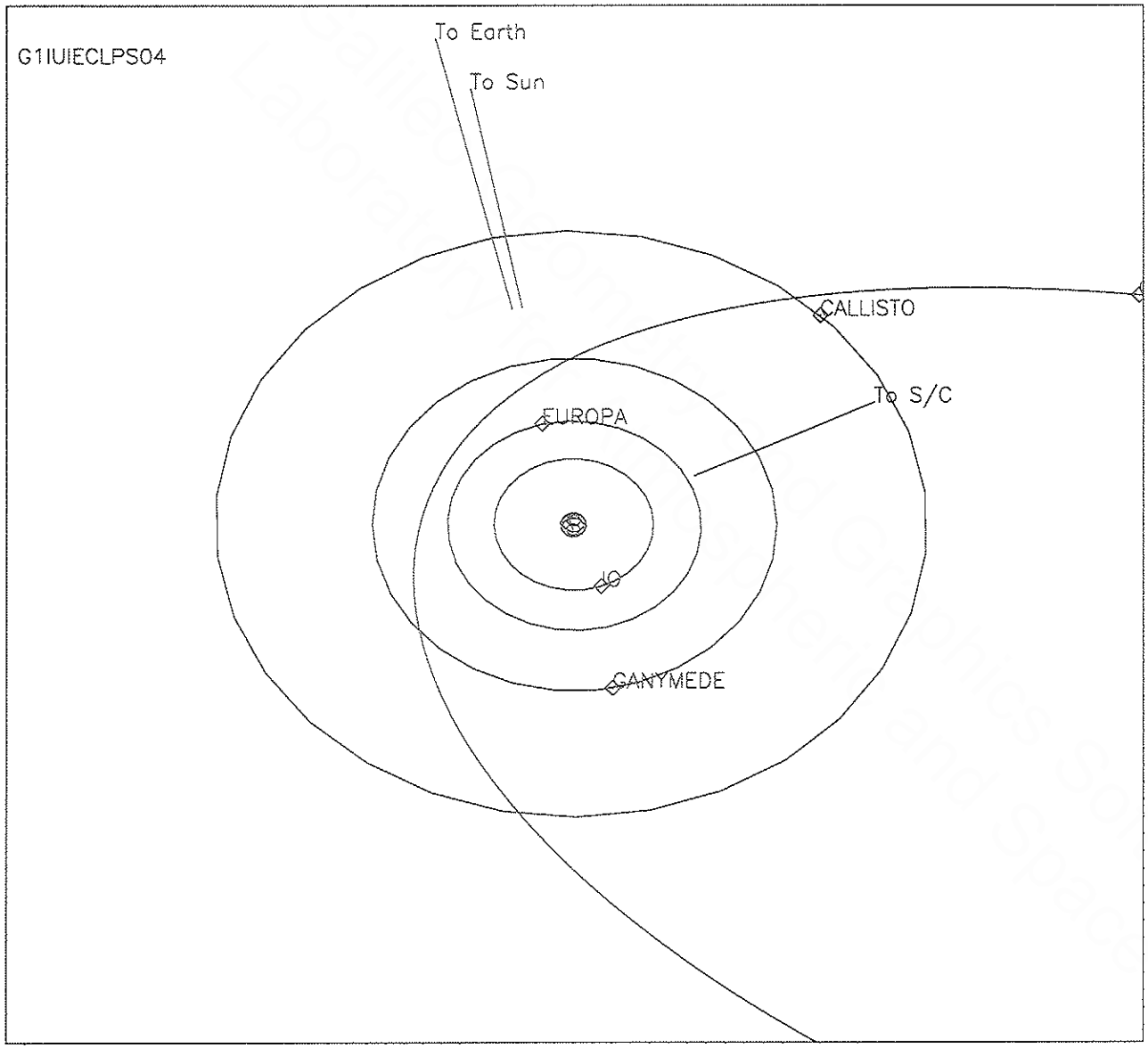

1996-175 // 21:49:15.000

28 days, 0.0 hours trajectory

Frame : 0

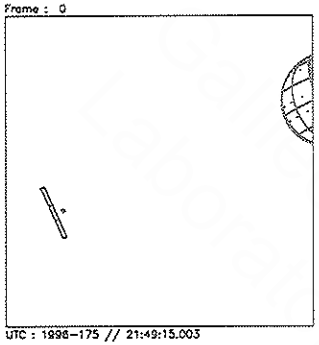

UTC : 1996-175 // 21:49:15.003
SCLK: 1/03492823:04:8:7

Frame : 1

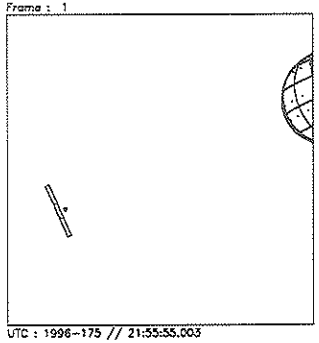

UTC : 1996-175 // 21:55:55.003
SCLK: 1/03492829:58:8:7

Frame : 2

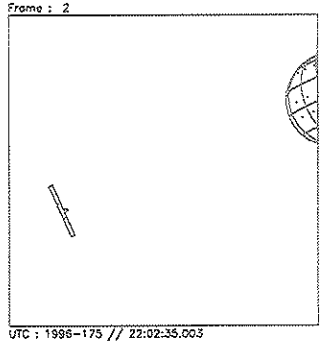

UTC : 1996-175 // 22:02:35.003
SCLK: 1/03492836:21:8:7

Frame : 3

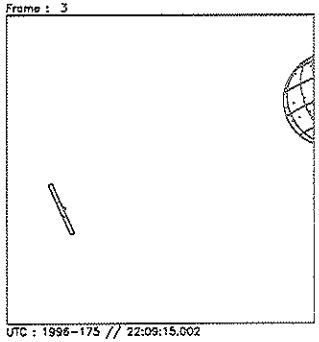

UTC : 1996-175 // 22:09:15.002
SCLK: 1/03492842:75:8:7

Frame : 4

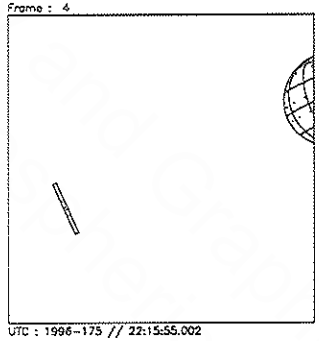

UTC : 1996-175 // 22:15:55.002
SCLK: 1/03492849:38:8:7

Frame : 5

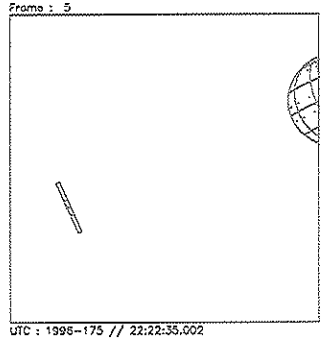

UTC : 1996-175 // 22:22:35.002
SCLK: 1/03492856:01:8:7

Frame : 6

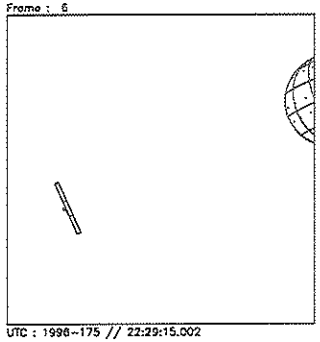

UTC : 1996-175 // 22:29:15.002
SCLK: 1/03492862:55:8:7

Frame : 7

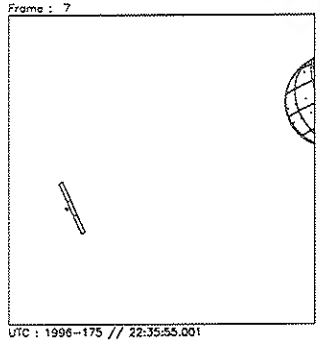

UTC : 1996-175 // 22:35:55.001
SCLK: 1/03492869:18:8:7

Frame : 8

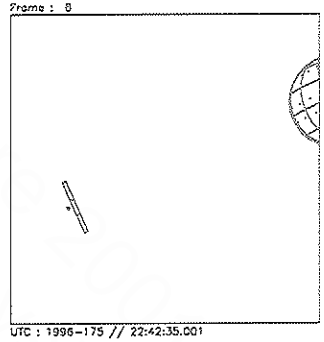

UTC : 1996-175 // 22:42:35.001
SCLK: 1/03492875:72:8:7

Start UTC_TIME : 1996-175 // 21:49:15.000
No End Time :
Start SCLK : 1/03492823:04:8:7

Target Body : IO
Target Cone/Clock : 110.02/ 93.67 Deg
S/C to Body Center : 3332807. Km (1826.8465 Ri)
Z-axis Pointing (Ra / Dec) : 102.80 / 25.00 Deg

Frame : 0

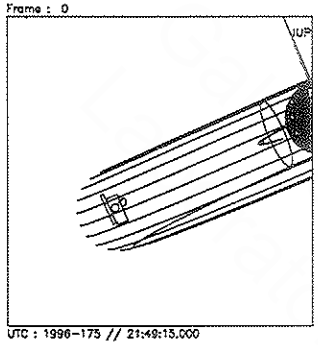

UTC : 1996-175 // 21:49:15.000
SCLK: 1/03492823:04:8:7

Frame : 1

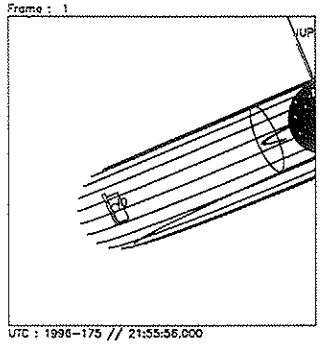

UTC : 1996-175 // 21:55:56.000
SCLK: 1/03492829:60:3:7

Frame : 2

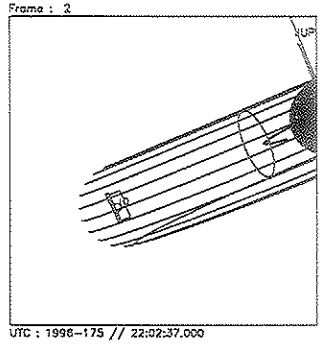

UTC : 1996-175 // 22:02:37.000
SCLK: 1/03492838:24:8:7

Frame : 3

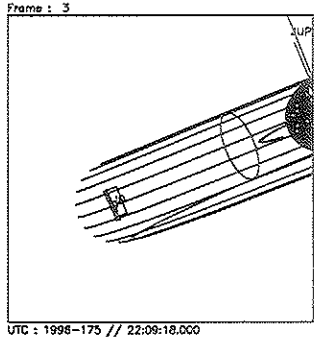

UTC : 1996-175 // 22:09:18.000
SCLK: 1/03492842:80:3:7

Frame : 4

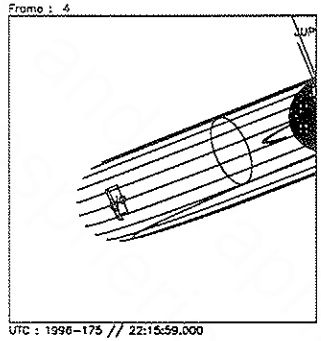

UTC : 1996-175 // 22:15:59.000
SCLK: 1/03492849:44:8:7

Frame : 5

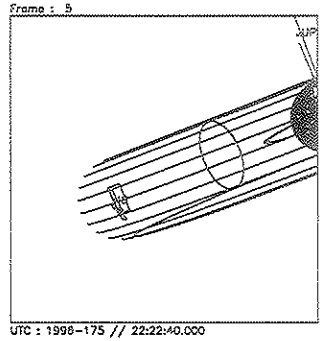

UTC : 1996-175 // 22:22:40.000
SCLK: 1/03492858:09:3:7

Frame : 6

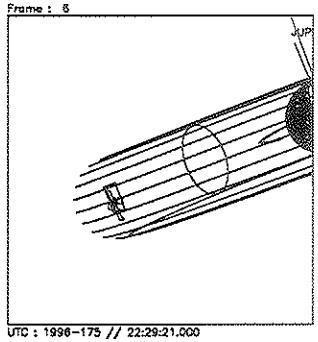

UTC : 1996-175 // 22:29:21.000
SCLK: 1/03492862:64:8:7

Frame : 7

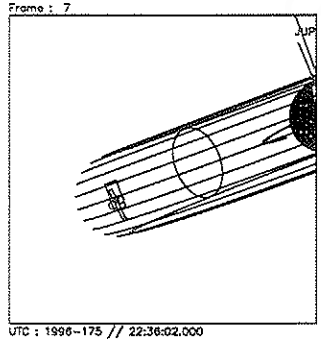

UTC : 1996-175 // 22:36:02.000
SCLK: 1/03492869:29:3:7

Frame : 8

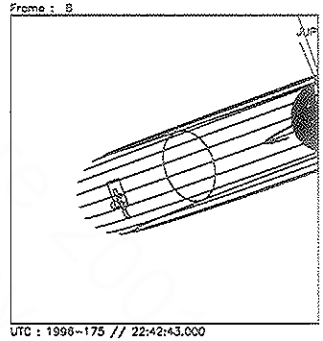

UTC : 1996-175 // 22:42:43.000
SCLK: 1/03492875:84:8:7

Start UTC_TIME : 1996-175 // 21:49:15.000
End UTC_TIME : 1996-175 // 22:42:50.000
Start SCLK : 1/03492823:04:8:7
Delta Time between FOV : 401.0000
FOVs : F Channel(0.1x0.4), N/G Channel(0.1x1.0)

Target Body : JUPITER
Target Cone/Clock : 102.79/ 93.53 Deg
S/C to Body Center : 3279005. Km (45.865335 Rj)
Z-axis Pointing (Ra / Dec) : 102.80 / 25.00 Deg

Activity ID:	Orbit G1 OAPEL EUEECLPS	**SeqNo**	01-
Title	UVS EUROPA ECLIPSE (PRE-INGRESS)	**Instrument**	UVS
Requestor	UVS-SWG/K.NAVIAUX 37740 **Team** UVS	**Working Group**	SWG

Time System	CDS	**Load ID**	G1A	**Calendar Date**	06/25/96 **Week** 26
Start	JEE-CDS 00003479:00:0	96-177/13:53:40.933		JEE-002/10:37:39.333	
End	JEE-CDS 00003454:00:0	96-177/14:18:57.600		JEE-002/10:12:22.666	
Duration	00000025:00:0	000/00:25:16.667		000/00:25:16.667	

Top Label	G1EUEECLPS01-				
Bottom Label	(real-time)				
Plot Key	UVS	**Type**	SCI		
CDS Bytes	130	**Report Options**	BOTH	**Scan Platform**	Yes
CDS Source	OAP	**Spin State**	DUAL	**DMS**	No

Observation Objective

Real-time Europa Eclipse observation. Characterize the change in the lower atmospheric UV airglow emissions as Europa enters and exits eclipse. Determine if the source of the change is due to: 1) a change in the lower atmospheric composition as it cools (ie. SO2 condensation); or 2) a potential change inthe excitation mechanism if solar photoexcitation is dominant over particle impact.

G1EUEECLPS01- = Europa pre-ingress measurement. 1 scan-platform drift across Europa in real-time (20 RIM 3-sigma drift rate) using the UVS 10bps RTS rate. Only 1 drift will be done prior to eclipse ingress due to PWS time sharing.

UVS Configuration = F/G Full Scans

Design Detail

CDS	RIM	Command	Parameters	PSID
28	003+	UVFLUSH	DISCRD,UVS	(CI)
36	004	TARGET	(4 RIM Posn_Slew)	(CE)
38	003	CMDRS		(CE)
	004	1	34UVS,07,S,N,N,N,S,0, ON,OFF,	ON, ON,OFF,NOOVR,1,00,9C,01,2C
	024	21	34UVS,C1,F,N,N,N,S,0,OFF,OFF,	ON,OFF,OFF,NOOVR,1,2C,05,00,00
28	023+	UVFLUSH	PACKET,UVS	(CJ)

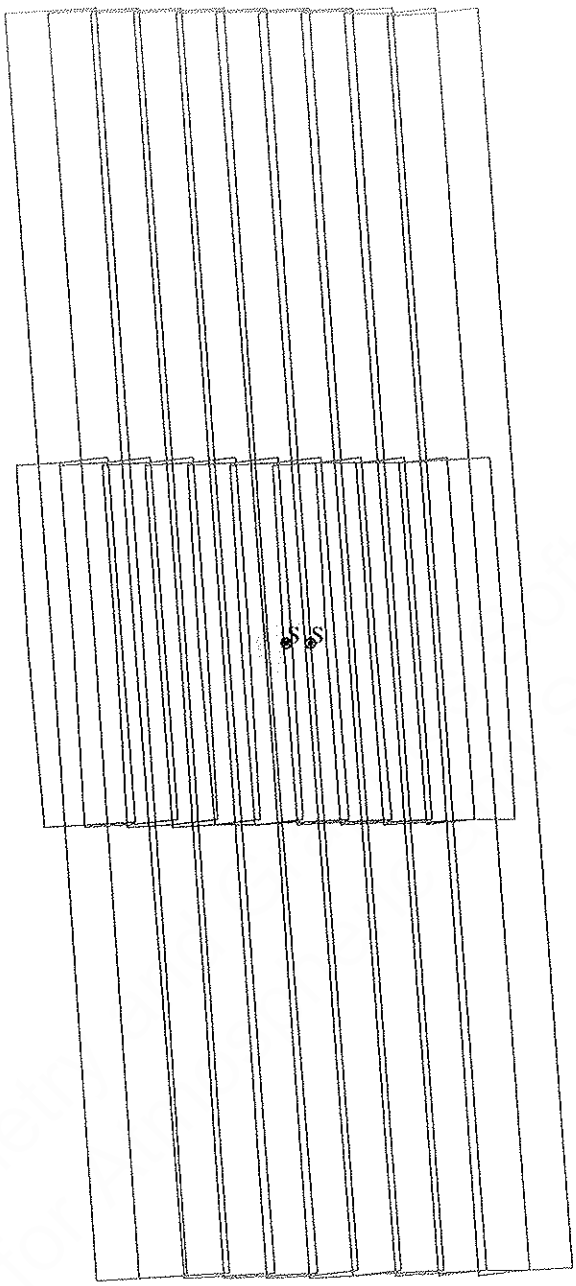

165CE:TT= 0 TMC= 1 C= 4.01 XC= 0.27 BS= 0/6382 TC= 9
A= 728 pD= 0 SR=17.430 RA50=230.43 DEC50=-16.85 cone=130.70 clock= 93.19

ARGET G1.0 brad : 2/28/1996 12:55: 7

ILE:P.G1EUEECLPS01

ARGET BODY : EUROPA

INI:m.target.enc

: EPH:/DATA/NAVIO/T-960110-ALL.NS

ERIAPSIS: THINNING:NONE :UVS 1

TART:JEE 96-180/00:31:20.266 -CDS 3475:00:0 BODY PLOT TIME:TARGET-TIME D= 0 S= 0.040

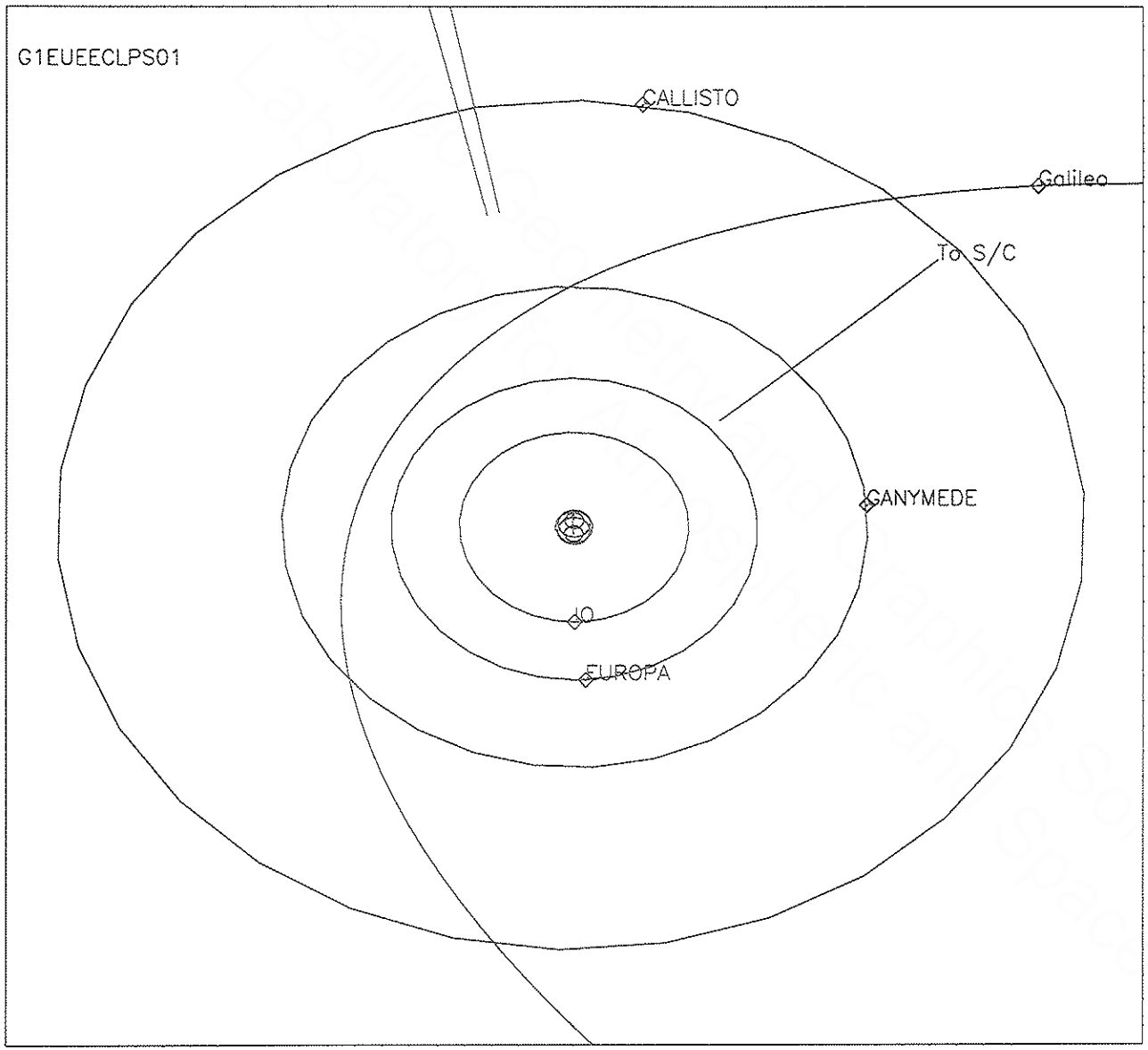

1996-177 // 13:53:40.000

28 days, 0.0 hours trajectory

Frame : 0

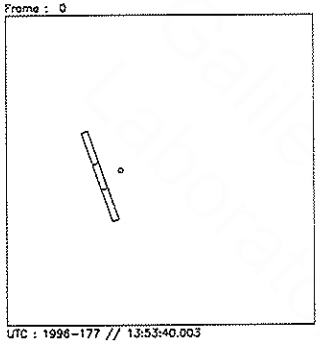

UTC : 1996-177 // 13:53:40.003
SCLK: 1/03495201:04:5:2

Frame : 1

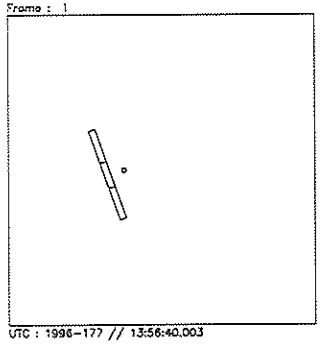

UTC : 1996-177 // 13:56:40.003
SCLK: 1/03495204:01:5:2

Frame : 2

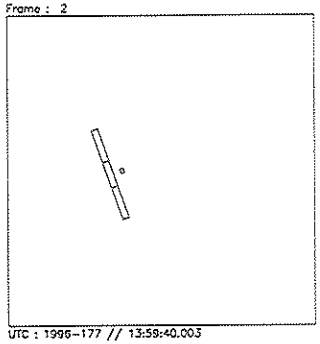

UTC : 1996-177 // 13:59:40.003
SCLK: 1/03495206:89:5:2

Frame : 3

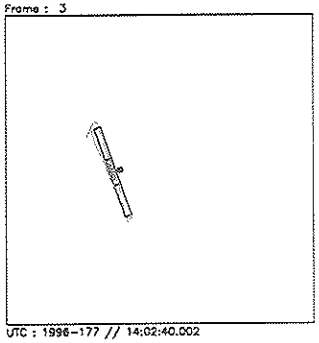

UTC : 1996-177 // 14:02:40.002
SCLK: 1/03495209:86:5:2

Frame : 4

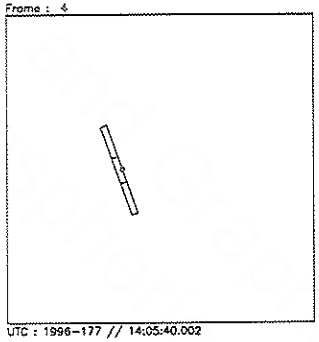

UTC : 1996-177 // 14:05:40.002
SCLK: 1/03495212:83:5:2

Frame : 5

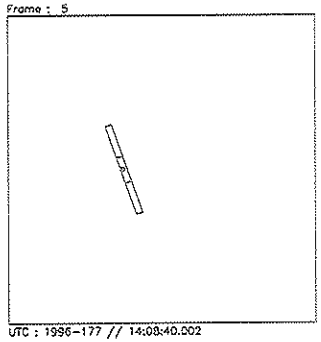

UTC : 1996-177 // 14:08:40.002
SCLK: 1/03495215:80:5:2

Frame : 6

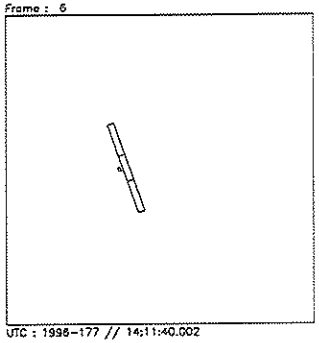

UTC : 1996-177 // 14:11:40.002
SCLK: 1/03495218:77:5:2

Frame : 7

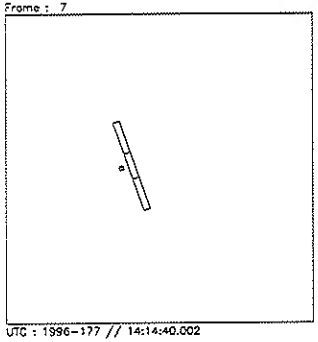

UTC : 1996-177 // 14:14:40.002
SCLK: 1/03495221:74:5:2

Frame : 8

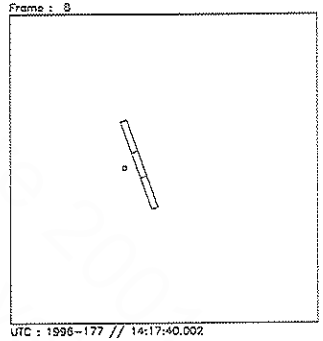

UTC : 1996-177 // 14:17:40.002
SCLK: 1/03495224:71:5:2

Start UTC_TIME : 1996-177 // 13:53:40.000
No End Time :
Start SCLK : 1/03495201:04:5:2

Target Body : EUROPA
Target Cone/Clock : 130.37/ 93.17 Deg
S/C to Body Center : 2692142. Km (1720.2185 Re)
Z-axis Pointing (Ra / Dec) : 102.80 / 25.00 Deg

Frame : 0

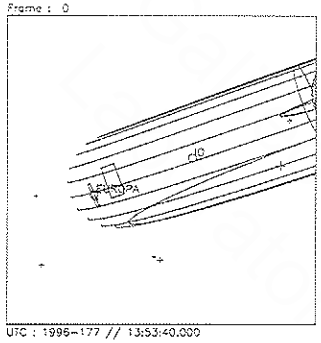

UTC : 1996-177 // 13:53:40.000
SCLK: 1/03495201:04:5:2

Frame : 1

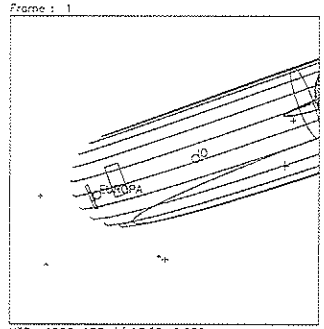

UTC : 1996-177 // 13:58:49.000
SCLK: 1/03495204:15:0:2

Frame : 2

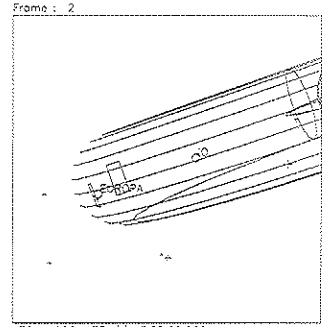

UTC : 1996-177 // 13:59:58.000
SCLK: 1/03495207:25:5:2

Frame : 3

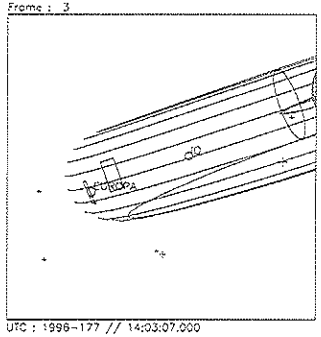

UTC : 1996-177 // 14:03:07.000
SCLK: 1/03495210:36:0:2

Frame : 4

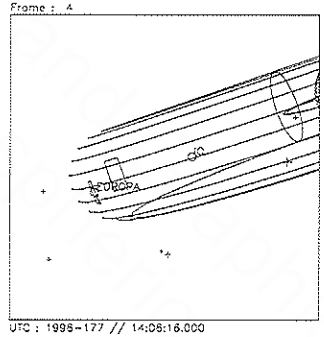

UTC : 1996-177 // 14:08:16.000
SCLK: 1/03495213:46:5:2

Frame : 5

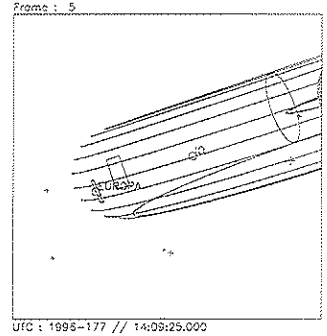

UTC : 1996-177 // 14:09:25.000
SCLK: 1/03495216:57:0:2

Frame : 6

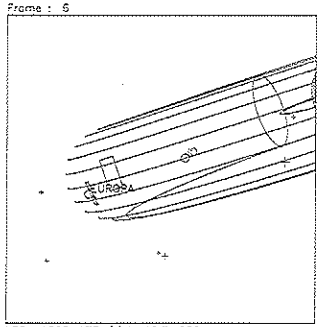

UTC : 1996-177 // 14:12:34.000
SCLK: 1/03495219:67:5:2

Frame : 7

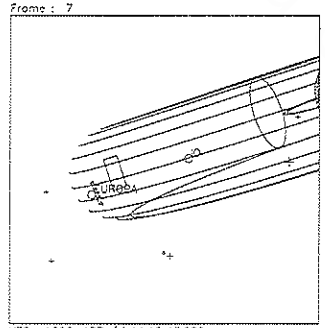

UTC : 1996-177 // 14:15:43.000
SCLK: 1/03495222:78:0:2

Frame : 8

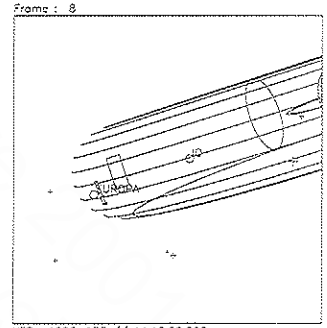

UTC : 1996-177 // 14:18:52.000
SCLK: 1/03495225:88:5:2

Start UTC_TIME : 1996-177 // 13:53:40.000
End UTC_TIME : 1996-177 // 14:18:57.000
Start SCLK : 1/03495201:04:5:2
Delta Time between FOV : 189.0000
FOVs : F Channel(0.1x0.4), N/G Channel(0.1x1.0)

Target Body : JUPITER
Target Cone/Clock : 118.73/ 93.20 Deg
S/C to Body Center : 2232356. Km (31.225258 Rj)
Z-axis Pointing (Ra / Dec) : 102.80 / 25.00 Deg

Activity ID:	Orbit G1 OAPEL EUEECLPS	**SeqNo**	02-
Title	UVS EUROPA ECLIPSE (POST-INGRESS)	**Instrument**	UVS
Requestor	UVS-SWG/K.NAVIAUX 37740 **Team** UVS	**Working Group**	SWG

Time System	CDS	**Load ID**	G1A	**Calendar Date**	06/25/96 **Week** 26
Start	JEE-CDS 00003453:00:0	96-177/14:19:58.266		JEE-002/10:11:22.000	
End	JEE-CDS 00003428:00:0	96-177/14:45:14.933		JEE-002/09:46:05.333	
Duration	00000025:00:0	000/00:25:16.667		000/00:25:16.667	

Top Label	G1EUEECLPS02-				
Bottom Label	(real-time)				
Plot Key	UVS	**Type**	SCI		
CDS Bytes	130	**Report Options**	BOTH	**Scan Platform**	Yes
CDS Source	OAP	**Spin State**	DUAL	**DMS**	No

Observation Objective

Real-time Europa Eclipse observation. Characterize the change in the lower atmospheric UV airglow emissions as Europa enters and exits eclipse. Determine if the source of the change is due to: 1) a change in the lower atmospheric composition as it cools (ie. SO2 condensation); or 2) a potential change inthe excitation mechanism if solar photoexcitation is dominant over particle impact.

G1EUEECLPS02- = Europa post-ingress measurement. 1 scan-platform drifts across Europa in real-time (20 RIM 3-sigma drift rate) using the UVS 10bps RTS rate. Only 1 drift will be done after eclipse ingress due to PWS time sharing.

UVS Configuration = F/G Full Scans

Design Detail

```
CDS RIM Command Parameters                                    PSID
--- --- -------- ----------                                    ----
28  003+UVFLUSH DISCRD,UVS                                    (CK)
36  004 TARGET  (4 RIM Posn_Slew)                             (CF)
38  003 CMDRS                                                 (CF)
    004     1   34UVS,07,S,N,N,N,S,0,  ON,OFF,  ON,  ON,OFF,NOOVR,1,00,9C,01,2C
    024     21  34UVS,C1,F,N,N,N,S,0,OFF,OFF,  ON,OFF,OFF,NOOVR,1,2C,05,00,00
28  023+UVFLUSH PACKET,UVS                                    (CL)
```

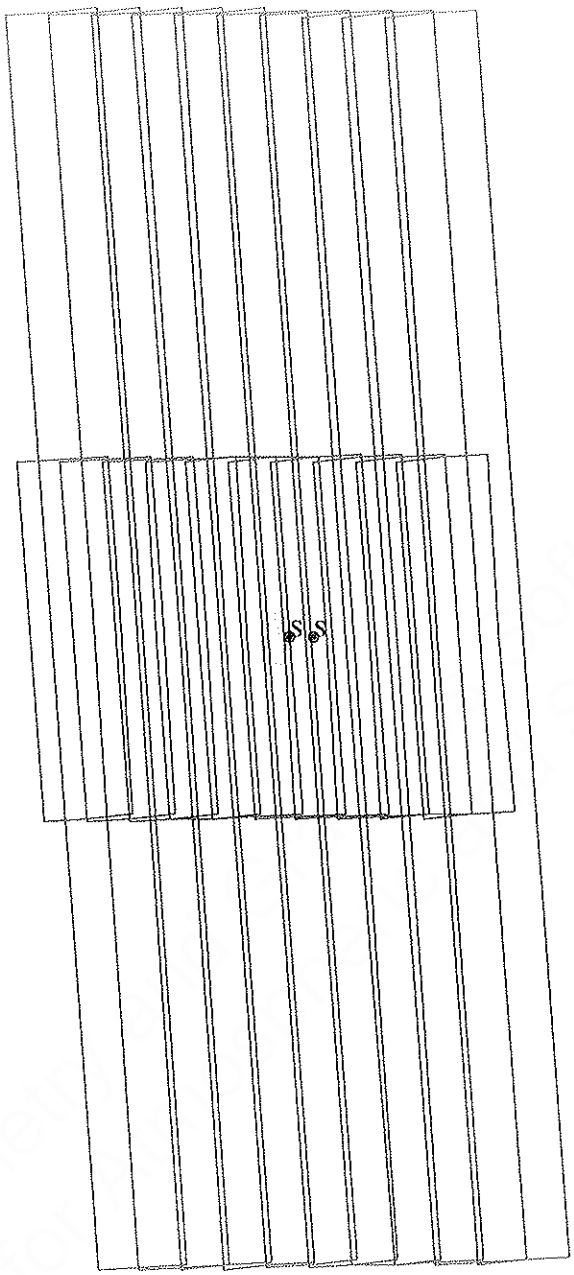

165CF:IT= 0 TMC= 1 C= 4.10 XC= 0.26 BS= 0/1114 TC= 9
A= 728 pD= 0 SR=17.430 RA50=231.04 DEC50=-17.01 cone=131.31 clock= 93.24

ARGET G1.0 brad : 2/28/1996 12:55: 7

LE:P.G1EUEECLPS02

ARGET BODY : EUROPA

INI:m.target.enc

EPH:/DATA/NAVIO/T-960110-ALL.NS

ERIAPSIS: THINNING:NONE :UVS 1

TART:JEE 96-180/00:31:20.266 -CDS 3449:00:0 BODY PLOT TIME:TARGET-TIME D= 0 S= 0.040

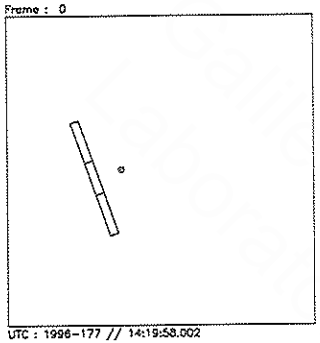

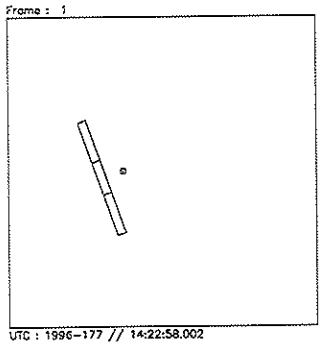

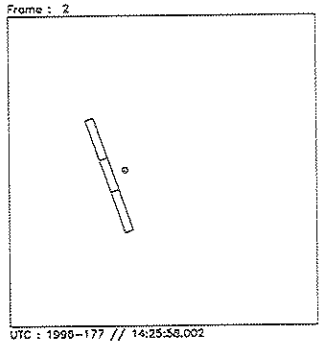

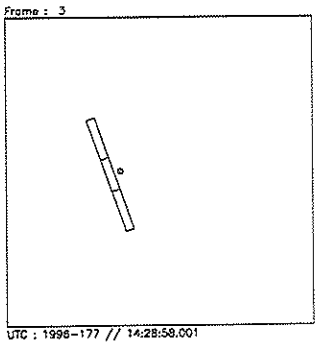

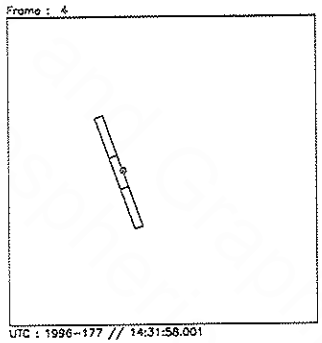

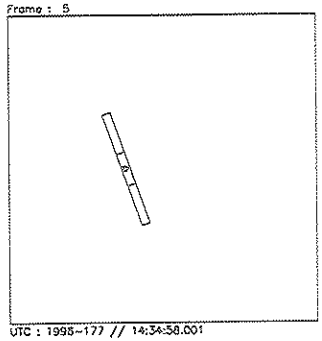

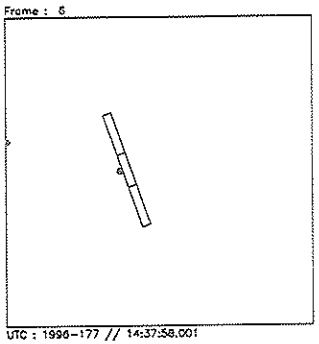

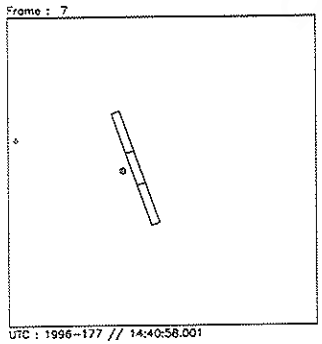

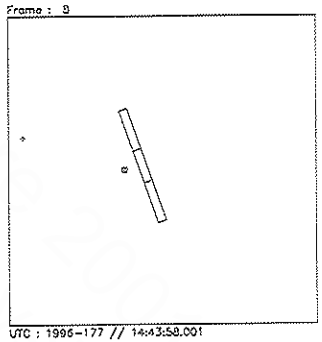

Start UTC_TIME : 1996-177 // 14:19:58.000
No End Time :
Start SCLK : 1/03495227:05:5:2

Target Body : EUROPA
Target Cone/Clock : 130.98/ 93.22 Deg
S/C to Body Center : 2667814. Km (1704.6737 Re)
Z-axis Pointing (Ra / Dec) : 102.80 / 25.00 Deg

Frame : 0

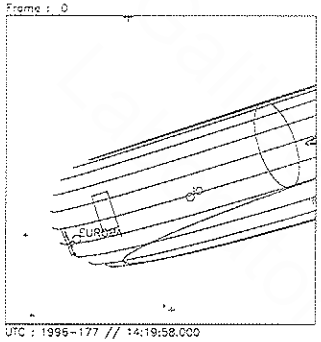

UTC : 1996-177 // 14:19:58.000
SCLK: 1/03495227:05:5:2

Frame : 1

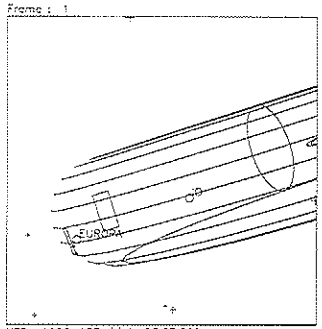

UTC : 1996-177 // 14:23:07.000
SCLK: 1/03495230:16:0:2

Frame : 2

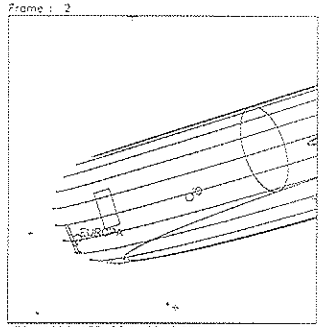

UTC : 1996-177 // 14:26:16.000
SCLK: 1/03495233:26:5:2

Frame : 3

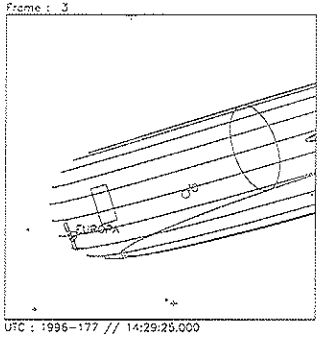

UTC : 1996-177 // 14:29:25.000
SCLK: 1/03495236:37:0:2

Frame : 4

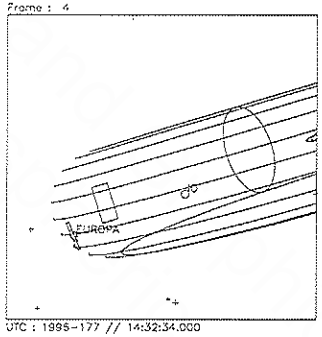

UTC : 1996-177 // 14:32:34.000
SCLK: 1/03495239:47:5:2

Frame : 5

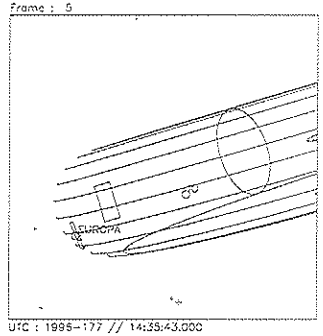

UTC : 1996-177 // 14:35:43.000
SCLK: 1/03495242:58:0:2

Frame : 6

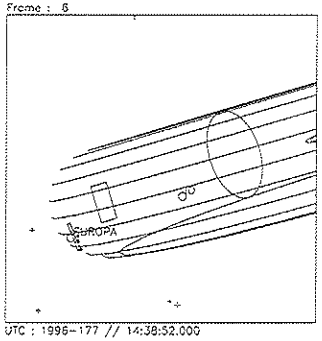

UTC : 1996-177 // 14:38:52.000
SCLK: 1/03495245:68:5:2

Frame : 7

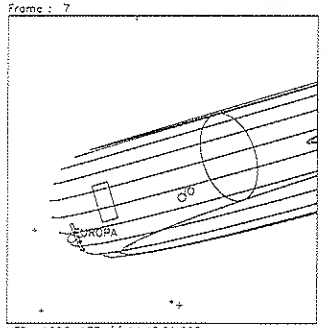

UTC : 1996-177 // 14:42:01.000
SCLK: 1/03495248:79:0:2

Frame : 8

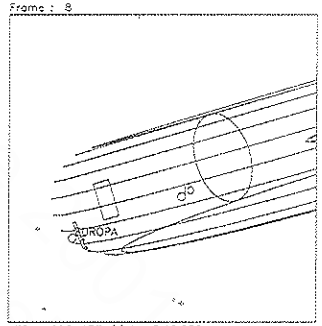

UTC : 1996-177 // 14:45:10.000
SCLK: 1/03495251:89:5:2

Start UTC_TIME : 1996-177 // 14:19:58.000
End UTC_TIME : 1996-177 // 14:45:14.000
Start SCLK : 1/03495227:05:5:2
Delta Time between FOV : 189.0000
FOVs : F Channel(0.1x0.4), N/G Channel(0.1x1.0)

Target Body : JUPITER
Target Cone/Clock : 118.99/ 93.20 Deg
S/C to Body Center : 2220092. Km (31.053706 Rj)
Z-axis Pointing (Ra / Dec) : 102.80 / 25.00 Deg

Activity ID: Orbit G1 OAPEL EUEECLPS SeqNo 03-

Title UVS EUROPA ECLIPSE (PRE-EGRESS) **Instrument** UVS

Requestor UVS-SWG/K.NAVIAUX 37740 **Team** UVS **Working Group** SWG

Time System CDS **Load ID** G1A **Calendar Date** 06/25/96 **Week** 26

Start	JEE-CDS 00003306:00:0	96-177/16:48:36.266	JEE-002/07:42:44.000
End	JEE-CDS 00003286:00:0	96-177/17:08:49.600	JEE-002/07:22:30.666
Duration	00000020:00:0	000/00:20:13.334	000/00:20:13.334

Top Label CG1EUEECLPS03-

Bottom Label (real-time)

Plot Key	UVS	**Type**	SCI		
CDS Bytes	130	**Report Options**	BOTH	**Scan Platform**	Yes
CDS Source	OAP	**Spin State**	DUAL	**DMS**	No

Observation Objective

Real-time Europa Eclipse observation. Characterize the change in the lower atmospheric UV airglow emissions as Europa enters and exits eclipse. Determine if the source of the change is due to: 1) a change in the lower atmospheric composition as it cools (ie. SO2 condensation); or 2) a potential change inthe excitation mechanism if solar photoexcitation is dominant over particle impact.

G1EUEECLPS03- = Europa pre-egress measurement. 1 scan-platform drift across Europa in real-time (15 RIM 3-sigma drift rate) using the UVS 10bps RTS rate. Only 1 drift will be done prior to eclipse egress due to PWS time sharing.

UVS Configuration = F/G Full Scans

Design Detail

```
CDS RIM Command Parameters                                  PSID
--- --- -------- ----------                                  ----
28  003+UVFLUSH DISCRD,UVS                                  (CM)
36  004 TARGET  (4 RIM Posn_Slew)                           (CG)
38  003 CMDRS                                               (CG)
    004     1   34UVS,07,S,N,N,N,S,0,  ON,OFF,  ON,  ON,OFF,NOOVR,1,00,9C,01,2C
    019    16   34UVS,C1,F,N,N,N,S,0,OFF,OFF,  ON,OFF,OFF,NOOVR,1,2C,05,00,00
28  018+UVFLUSH PACKET,UVS                                  (CN)
```

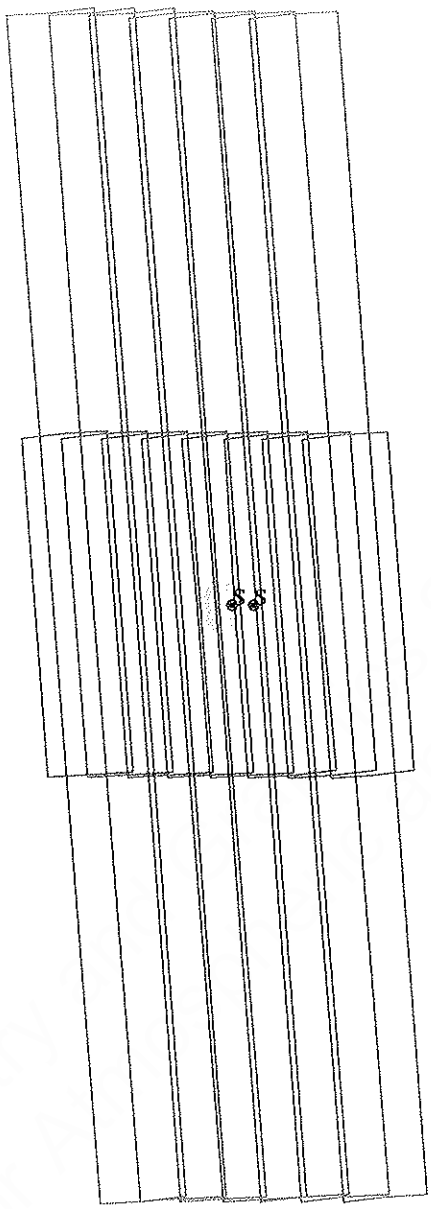

165CG:TT= 0 TMC= 1 C= 3.14 XC= 0.25 BS= 0/7868 TC= 9
A= 728 pD= 0 SR=17.430 RA50=234.48 DEC50=-17.84 cone=134.68 clock= 93.57

ARGET G1.0 brad : 2/28/1996 12:55: 7

ILE:P.G1EUEECLPS03

ARGET BODY : EUROPA

INI:m.target.enc

EPH:/DATA/NAVIO/T-960110-ALL.NS

ERIAPSIS: THINNING:NONE :UVS 1

TART:JEE 96-180/00:31:20.266 -CDS 3302:00:0 BODY PLOT TIME:TARGET-TIME D= 0 S= 0.040

Frame : 0

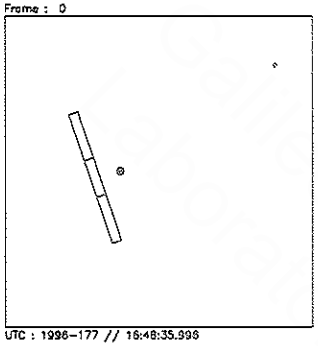

UTC : 1996-177 // 16:48:35.996
SCLK: 1/03495374:05:5:2

Frame : 1

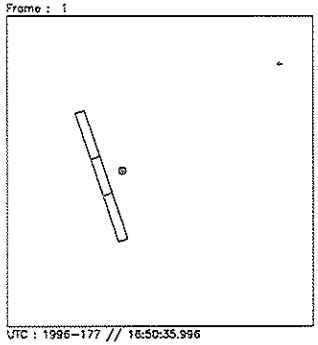

UTC : 1996-177 // 16:50:35.996
SCLK: 1/03495376:03:5:2

Frame : 2

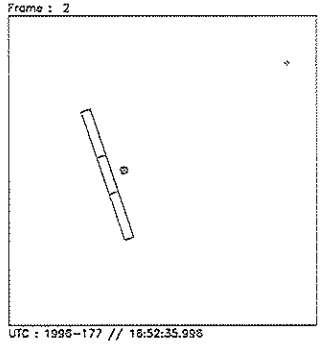

UTC : 1996-177 // 16:52:35.996
SCLK: 1/03495378:01:5:2

Frame : 3

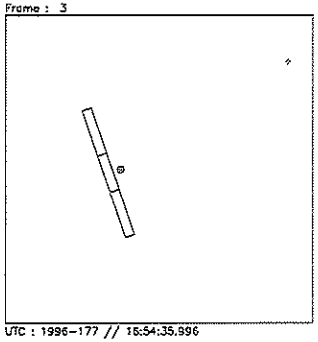

UTC : 1996-177 // 16:54:35.996
SCLK: 1/03495379:90:5:2

Frame : 4

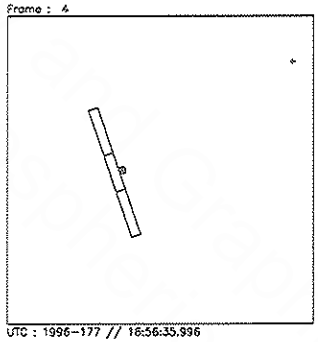

UTC : 1996-177 // 16:56:35.996
SCLK: 1/03495381:88:5:2

Frame : 5

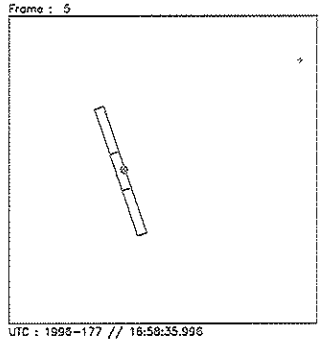

UTC : 1996-177 // 16:58:35.996
SCLK: 1/03495383:86:5:2

Frame : 6

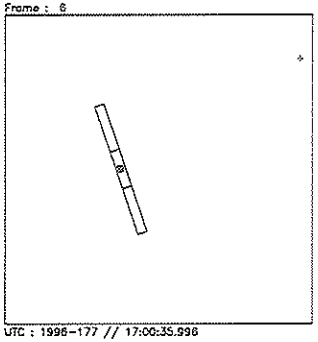

UTC : 1996-177 // 17:00:35.996
SCLK: 1/03495385:84:5:2

Frame : 7

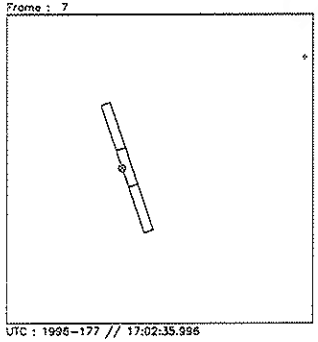

UTC : 1996-177 // 17:02:35.996
SCLK: 1/03495387:82:5:2

Frame : 8

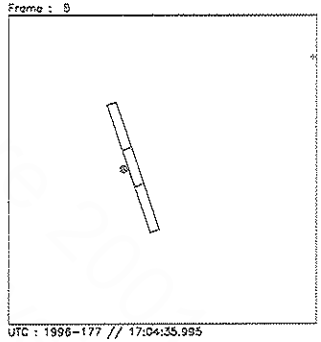

UTC : 1996-177 // 17:04:35.995
SCLK: 1/03495389:80:5:2

Start UTC_TIME : 1996-177 // 16:48:36.000
No End Time :
Start SCLK : 1/03495374:05:5:2

Target Body : EUROPA
Target Cone/Clock : 134.41/ 93.55 Deg
S/C to Body Center : 2525503. Km (1613.7399 Re)
Z-axis Pointing (Ra / Dec) : 102.80 / 25.00 Deg

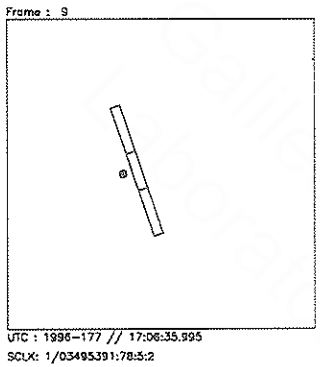

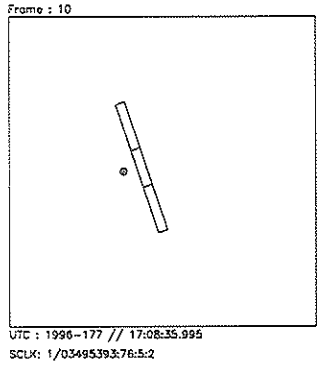

Start UTC_TIME : 1996-177 // 16:48:36.000
No End Time :
Start SCLK : 1/03495374:05:5:2

Target Body : EUROPA
Target Cone/Clock : 134.83/ 93.59 Deg
S/C to Body Center : 2507755. Km (1602.3992 Re)
Z-axis Pointing (Ra / Dec) : 102.80 / 25.00 Deg

Frame : 0

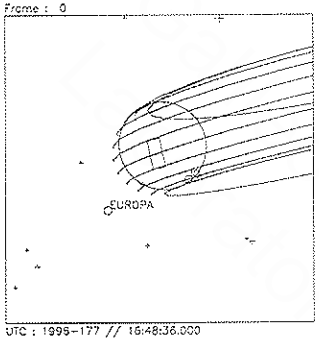

UTC : 1996-177 // 16:48:36.000
SCLK: 1/03495374:05:5:2

Frame : 1

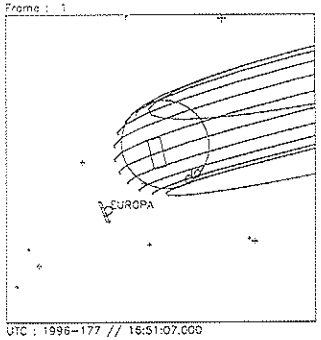

UTC : 1996-177 // 16:51:07.000
SCLK: 1/03495376:50:0:2

Frame : 2

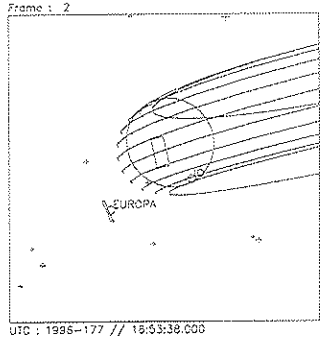

UTC : 1996-177 // 16:53:38.000
SCLK: 1/03495379:03:5:2

Frame : 3

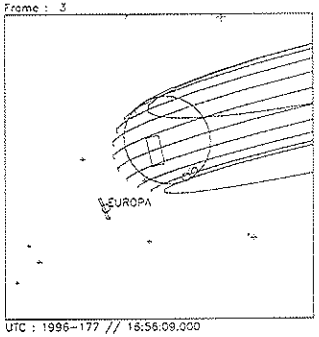

UTC : 1996-177 // 16:56:09.000
SCLK: 1/03495381:48:0:3

Frame : 4

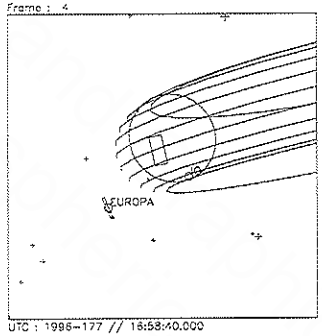

UTC : 1996-177 // 16:58:40.000
SCLK: 1/03495384:01:5:3

Frame : 5

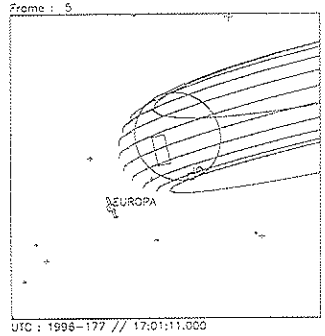

UTC : 1996-177 // 17:01:11.000
SCLK: 1/03495386:46:0:3

Frame : 6

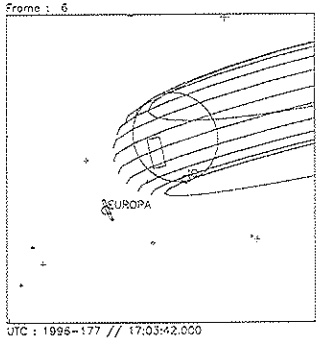

UTC : 1996-177 // 17:03:42.000
SCLK: 1/03495388:90:5:3

Frame : 7

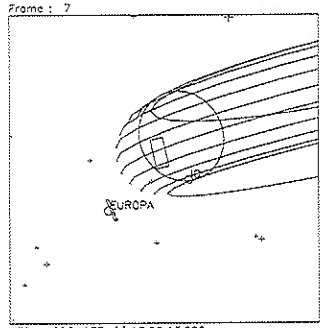

UTC : 1996-177 // 17:06:13.000
SCLK: 1/03495391:44:0:3

Frame : 8

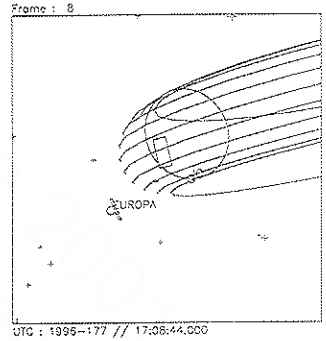

UTC : 1996-177 // 17:08:44.000
SCLK: 1/03495393:88:5:3

Start UTC_TIME : 1996-177 // 16:48:36.000
End UTC_TIME : 1996-177 // 17:08:49.000
Start SCLK : 1/03495374:05:5:2
Delta Time between FOV : 151.0000
FOVs : F Channel(0.1x0.4), N/C Channel(0.1x1.0)

Target Body : JUPITER
Target Cone/Clock : 120.51/ 93.16 Deg
S/C to Body Center : 2150445. Km (30.079520 Rj)
Z-axis Pointing (Ra / Dec) : 102.80 / 25.00 Deg

Activity ID:	Orbit G1 OAPEL EUEECLPS	SeqNo	04-
Title	UVS EUROPA ECLIPSE (POST-EGRESS)	Instrument	UVS
Requestor	UVS-SWG/K.NAVIAUX 37740 Team UVS	Working Group	SWG

Time System	CDS	Load ID	G1A	Calendar Date	06/25/96 Week 26
Start	JEE-CDS 00003283:00:0	96-177/17:11:51.600		JEE-002/07:19:28.666	
End	JEE-CDS 00003263:00:0	96-177/17:32:04.933		JEE-002/06:59:15.333	
Duration	00000020:00:0	000/00:20:13.333		000/00:20:13.333	

Top Label	CG1EUEECLPS04-				
Bottom Label	(real-time)				
Plot Key	UVS	Type	SCI		
CDS Bytes	130	Report Options	BOTH	Scan Platform	Yes
CDS Source	OAP	Spin State	DUAL	DMS	No

Observation Objective

Real-time Europa Eclipse observation. Characterize the change in the lower atmospheric UV airglow emissions as Europa enters and exits eclipse. Determine if the source of the change is due to: 1) a change in the lower atmospheric composition as it cools (ie. SO2 condensation); or 2) a potential change inthe excitation mechanism if solar photoexcitation is dominant over particle impact.

G1EUEECLPS04- = Europa post-egress measurement. 1 scan-platform drift across Europa in real-time (15 RIM 3-sigma drift rate) using the UVS 10bps RTS rate. Only 1 drift will be done after eclipse ingress due to PWS time sharing.

UVS Configuration = F/G Full Scans

Design Detail

```
CDS RIM Command Parameters                                  PSID
--- --- -------- ----------                                  ----
28  003+UVFLUSH DISCRD,UVS                                  (CO)
36  004 TARGET  (4 RIM Posn_Slew)                           (CH)
38  003 CMDRS                                               (CH)
    004     1   34UVS,07,S,N,N,N,S,0,  ON,OFF,  ON,  ON,OFF,NOOVR,1,00,9C,01,2C
    019    16   34UVS,C1,F,N,N,N,S,0,OFF,OFF,  ON,OFF,OFF,NOOVR,1,2C,05,00,00
28  018+UVFLUSH PACKET,UVS                                  (CP)
```

Frame : 0

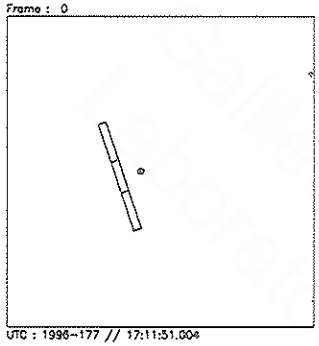

UTC : 1996-177 // 17:11:51.004
SCLK: 1/03495397:05:0:3

Frame : 1

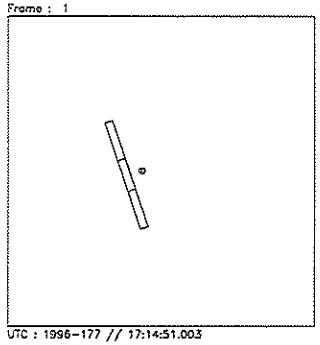

UTC : 1996-177 // 17:14:51.003
SCLK: 1/03495400:02:0:3

Frame : 2

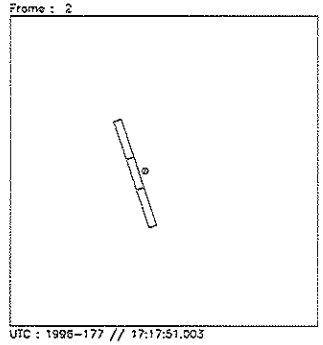

UTC : 1996-177 // 17:17:51.003
SCLK: 1/03495402:90:0:3

Frame : 3

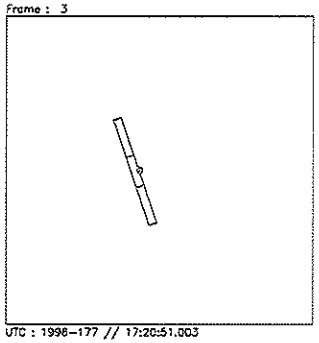

UTC : 1996-177 // 17:20:51.003
SCLK: 1/03495405:87:0:3

Frame : 4

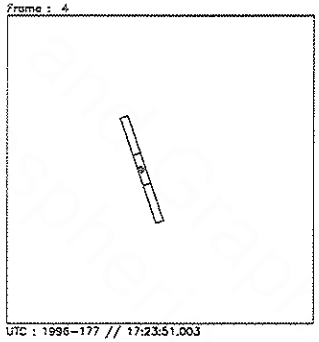

UTC : 1996-177 // 17:23:51.003
SCLK: 1/03495408:84:0:3

Frame : 5

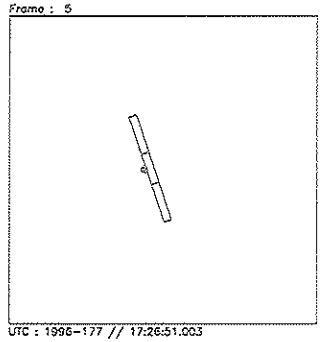

UTC : 1996-177 // 17:26:51.003
SCLK: 1/03495411:81:0:3

Frame : 6

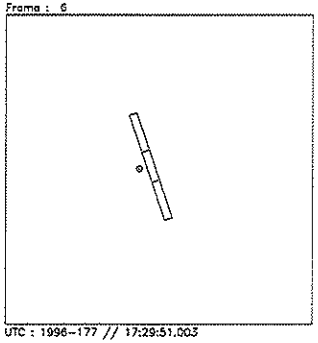

UTC : 1996-177 // 17:29:51.003
SCLK: 1/03495414:78:0:3

Frame : 7

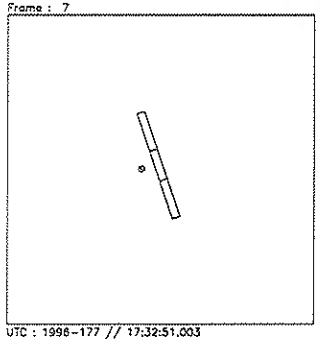

UTC : 1996-177 // 17:32:51.003
SCLK: 1/03495417:75:0:3

Start UTC_TIME : 1996-177 // 17:11:51.000
No End Time :
Start SCLK : 1/03495397:05:0:3

Target Body : EUROPA
Target Cone/Clock : 134.95/ 93.60 Deg
S/C to Body Center : 2502559. Km (1599.0791 Re)
Z-axis Pointing (Ra / Dec) : 102.80 / 25.00 Deg

Frame : 0

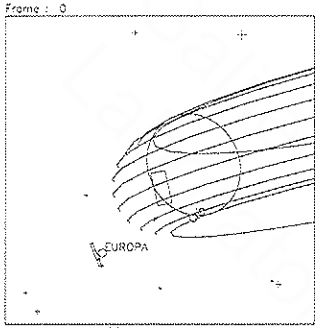

UTC : 1996-177 // 17:11:51.000
SCLK: 1/03495397:05:0:3

Frame : 1

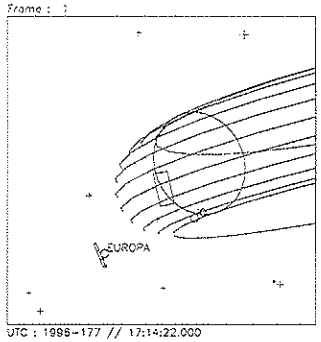

UTC : 1996-177 // 17:14:22.000
SCLK: 1/03495399:49:5:3

Frame : 2

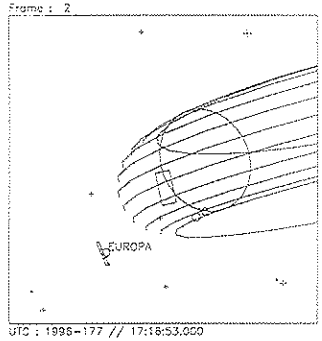

UTC : 1996-177 // 17:16:53.000
SCLK: 1/03495402:03:0:3

Frame : 3

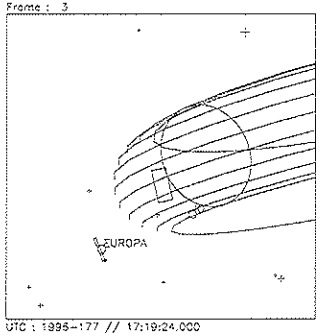

UTC : 1996-177 // 17:19:24.000
SCLK: 1/03495404:47:5:3

Frame : 4

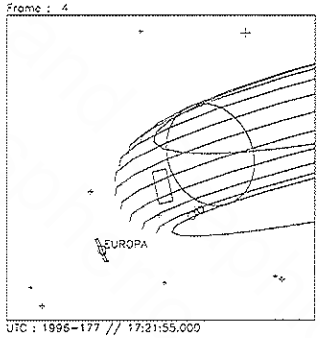

UTC : 1996-177 // 17:21:55.000
SCLK: 1/03495407:01:0:3

Frame : 5

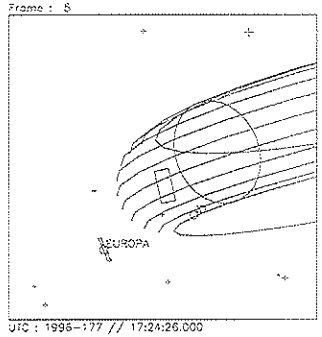

UTC : 1996-177 // 17:24:26.000
SCLK: 1/03495409:45:5:3

Frame : 6

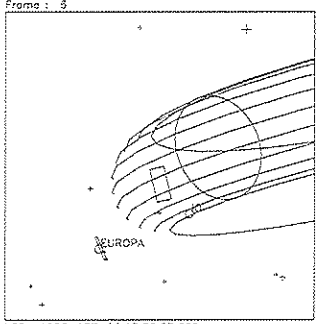

UTC : 1996-177 // 17:28:57.000
SCLK: 1/03495411:90:0:3

Frame : 7

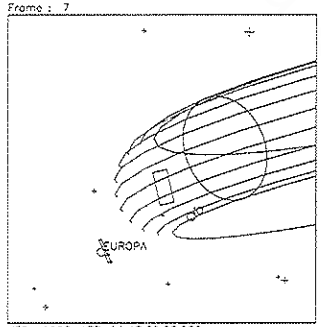

UTC : 1996-177 // 17:29:28.000
SCLK: 1/03495414:43:5:3

Frame : 8

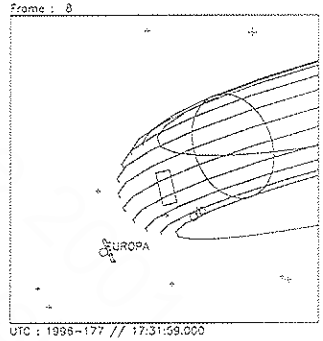

UTC : 1996-177 // 17:31:59.000
SCLK: 1/03495416:88:0:3

Start UTC_TIME : 1996-177 // 17:11:51.000
End UTC_TIME : 1996-177 // 17:32:04.000
Start SCLK : 1/03495397:05:0:3
Delta Time between FOV : 151.0000
FOVs : F Channel(0.1x0.4), N/G Channel(0.1x1.0)

Target Body : JUPITER
Target Cone/Clock : 120.76/ 93.16 Deg
S/C to Body Center : 213949:. Km (29.926422 Rj)
Z-axis Pointing (Ra / Dec) : 102.80 / 25.00 Deg

Activity ID:	Orbit G1	OAPEL JUFIXLON		**SeqNo**	01-
Title	Fixed longitude map			**Instrument**	UVS
Requestor	UVS-AWG/W. KENT TOBISKA	**Team**	UVS	**Working Group**	AWG

Time System	CDS	**Load ID**	G1A	**Calendar Date**	06/23/96 Week 25

Start	JEE-CDS 00005744:00:0	96-175/23:43:30.933	JEE-004/00:47:49.333
End	JEE-CDS 00005710:00:0	96-176/00:17:53.600	JEE-004/00:13:26.666
Duration	00000034:00:0	000/00:34:22.667	000/00:34:22.667

Top Label	G1JUFIXLON01-				
Bottom Label	realtime				
Plot Key	UVS	**Type**	SCI		
CDS Bytes	130	**Report Options**	BOTH	**Scan Platform**	Yes
CDS Source	OAP	**Spin State**	DUAL	**DMS**	No

Observation Objective

Darkside map of H Ly-a bulge at 300-307 degrees longitude.

Realtime observation at 10 bps for 0.5 hours; G/G Ly-a 88 step 2 position miniscan: even frames are centered at 1199.7 A (1131.5-1265.9) and the odd frames are centered at 1267.5 A (1199.7-1333.4). 10 RIMs UVS OFF/FIXED every 30 RIMs for PWS. Expect RTSFMT = D. Distance from Jupiter = 45 Rj.

Last cn/ck = TBD

Design Detail

```
PSID   CDS RIM COMMAND PARAMETERS
384AA   00   00 COMMNT UVS RIM 0
349AA   28   03+UVFLSH DISCRD,UVS
157AA   38   03 CMDRS   PLAN_DUR = 21 RIMS; EST_UVS_CMDS = 2
             04       1
34UVS/UVG:DF,FIXED,NORM,NORM,NORM,SAME,0,OFF,OFF,ON,ON,OFF,NOOVR,1,2C,7D,00,2C
             24       21
34UVS/OFF:C1,FIXED,NORM,NORM,NORM,SAME,0,OFF,OFF,ON,OFF,OFF,NOOVR,1,2C,05,00,00
165AA   36   04 TARGET Lat/lon = 0/300 RA/Dec = 205.28/-6.56 (no TMC)
349AB   28   23+UVFLSH PACKET,UVS
```

Wed Apr 17 22:32:16 1996

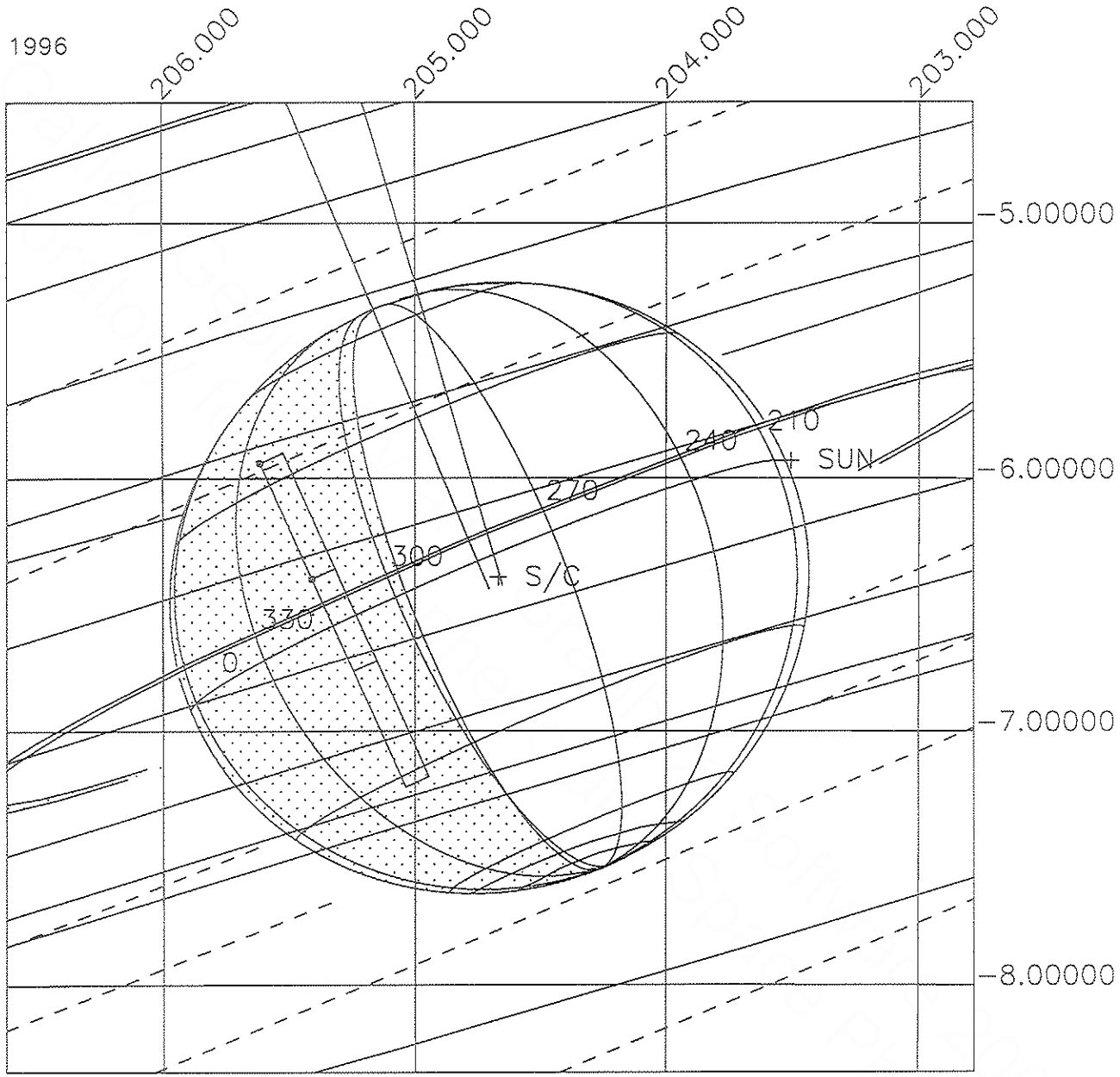

we get boresight @ 310° long at end

Start UTC_TIME : 1996-176 // 00:17:53.600
No End Time :
Start SCLK : 1/03492970:05:7:7

Target Body : JUPITER
Target Ra/Dec : 204.70/ -6.44 Deg
S/C to Body Center : 3218337. Km (45.016745 Rj)
Z-axis Pointing (Ra / Dec) : 102.80 / 25.00 Deg

Wed Apr 17 22:26:43 1996

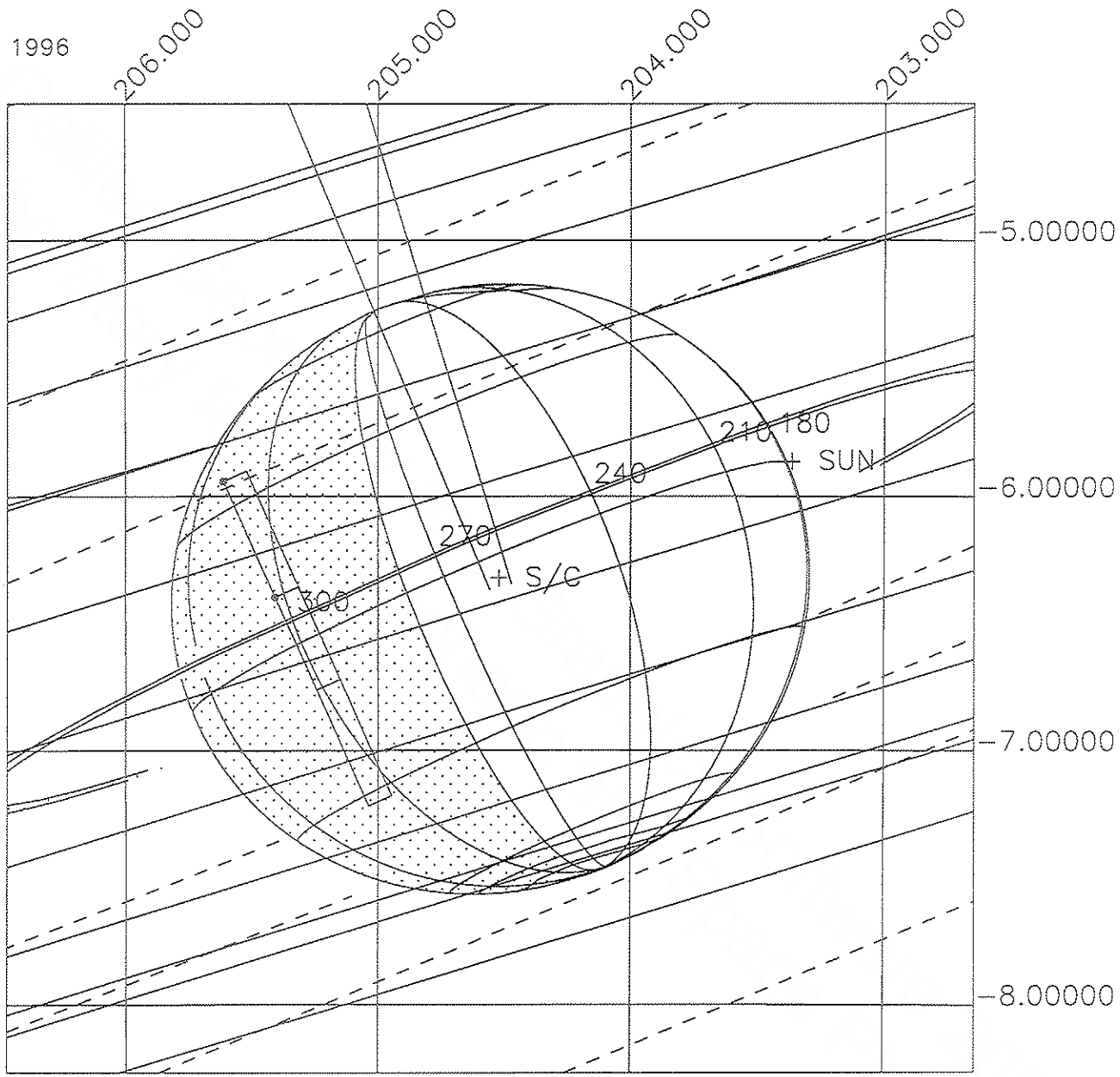

Start UTC_TIME : 1996-175 // 23:43:30.933
No End Time :
Start SCLK : 1/03492936:05:7:7

Target Body : JUPITER
Target Ra/Dec : 204.56/ -6.37 Deg
S/C to Body Center : 3232411. Km (45.213609 Rj)
Z-axis Pointing (Ra / Dec) : 102.80 / 25.00 Deg

FIXLONSYS from GOLASH
predict kernel

M. Jun 24 15:53:27 1996

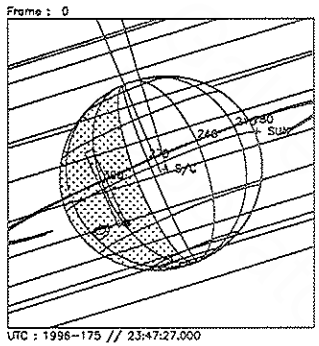

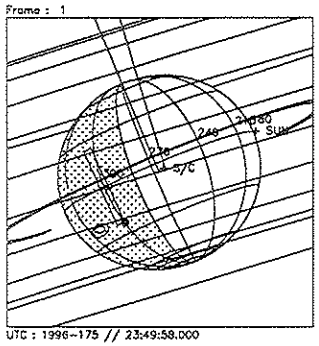

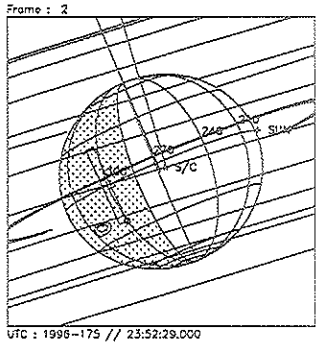

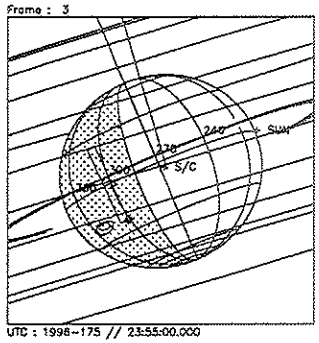

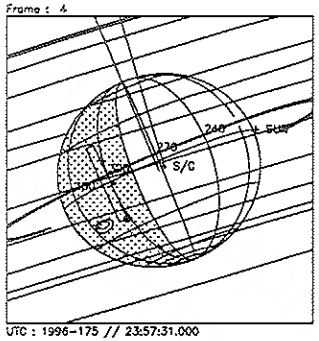

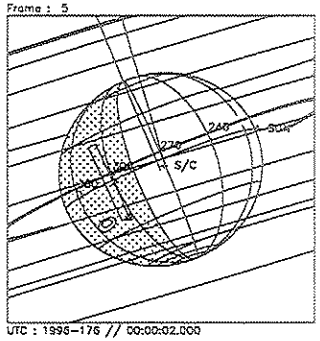

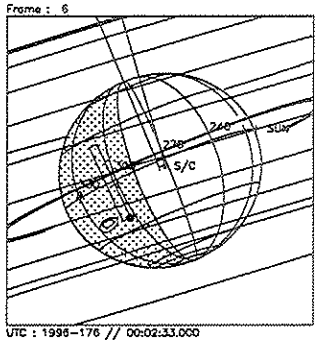

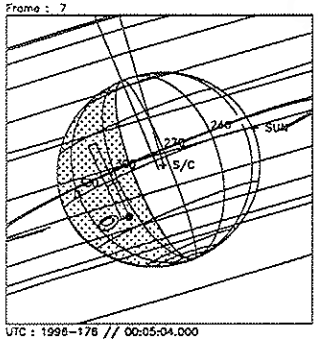

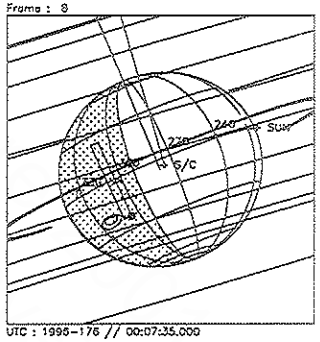

Start UTC_TIME : 1996-175 // 23:47:27.000
End UTC_TIME : 1996-176 // 00:07:40.000
Start SCLK : 1/03492939:86:8:7
Delta Time between FOV : 151.0000
FOVs : N/G Channel(0.1x1.0)

Target Body : JUPITER
Target Cone/Clock : 103.34/ 93.52 Deg
S/C to Body Center : 3230802. Km (45.191097 Rj)
Z-axis Pointing (Ra / Dec) : 102.80 / 25.00 Deg

Activity ID:	Orbit G1	OAPEL JUEWMAPS		SeqNo 01-	
Title	East-West maps			**Instrument**	UVS
Requestor	UVS-AWG/W. KENT TOBISKA	**Team**	UVS	**Working Group**	AWG

Time System	CDS	**Load ID**	G1A	**Calendar Date**	06/24/96 Week 26
Start	JEE-CDS 00005710:00:0	96-176/00:17:53.600		JEE-004/00:13:26.666	
End	JEE-CDS 00005678:00:0	96-176/00:50:14.933		JEE-003/23:41:05.333	
Duration	00000032:00:0	000/00:32:21.333		000/00:32:21.333	

Top Label	G1JUEWMAPS01-				
Bottom Label	recorded				
Plot Key	UVS	**Type**	SCI		
CDS Bytes	157	**Report Options**	BOTH	**Scan Platform**	Yes
CDS Source	OAP	**Spin State**	DUAL	**DMS**	Yes

Observation Objective

East-west map of the southern auroral region at -60 deg latitude to map the Io fluxtube footprint (-62/353). Start from off dark limb, continue past terminator onto bright limb, then off planet to get background. Use color ratio to get particle energies.

Recorded observation; G/G full-scan with 2 RIMS F/G full-scan on brightside. Distance from Jupiter = 45 Rj.

Last cn/ck = TBD

Design Detail

```
PSID   CDS  RIM  COMMAND PARAMETERS
384AB   00   00  COMMNT UVS RIM 0
157AB   66   01  CMDRS   PLAN_DUR = 31 RIMS; EST_UVS_CMDS = 4
             02       1
34UVS/UVG:07,SCAN,NORM,NORM,NORM,SAME,0,OFF,OFF,ON,ON,OFF,NOOVR,1,2C,9D,00,00
             16      15
34UVS/UVF:07,SCAN,NORM,NORM,NORM,SAME,0,ON,OFF,ON,ON,OFF,NOOVR,1,00,9C,01,2C
             18      17
34UVS/UVG:07,SCAN,NORM,NORM,NORM,SAME,0,OFF,OFF,ON,ON,OFF,NOOVR,1,2C,9D,00,00
             32      31
34UVS/OFF:C1,FIXED,NORM,NORM,NORM,SAME,0,OFF,OFF,ON,OFF,OFF,NOOVR,1,2C,05,00,00
165AB   36   02  TARGET subs/c pt (cn off=27 mrad, xcn off=-17 mrad) (RA/Dec = 205.74/-7.94)
117AA   37   02  CSMOS  1 Strips (29 RIMS strip; 1 RIM repos); PLAN_DUR = 30 RIMS; SLEW_RATE =
0.03
305AA   00   02  SELECT INSTR = UVS2; COMPRESSION = RICE; CMPR_DVSR = 1.0; CMPR_UNC = 0.0
175AA   18   02  SCIREC MODE_RATE = R7
300AA   00   32  DESELC INSTR = UVS2
```

Frame : 0

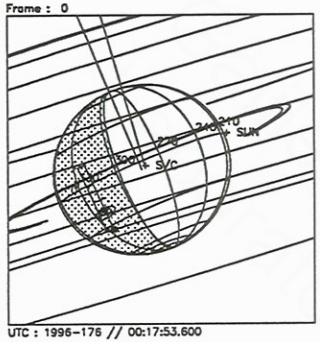

UTC : 1996-176 // 00:17:53.600
SCLK: 1/03492970:05:7:7

EW MAP

Frame : 1

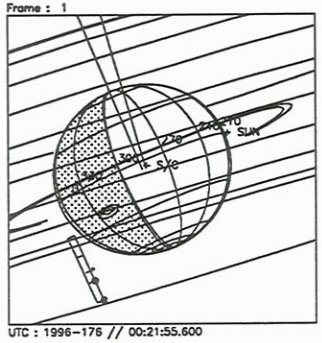

UTC : 1996-176 // 00:21:55.600
SCLK: 1/03492974:04:7:7

Frame : 2

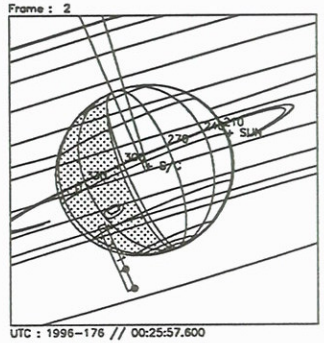

UTC : 1996-176 // 00:25:57.600
SCLK: 1/03492978:03:7:7

Frame : 3

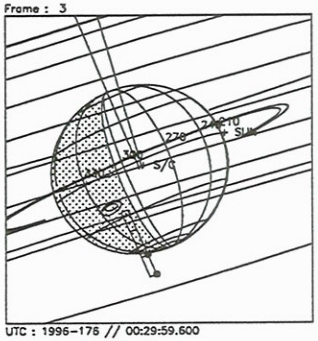

UTC : 1996-176 // 00:29:59.600
SCLK: 1/03492982:02:7:7

33:58
F+G

Frame : 4

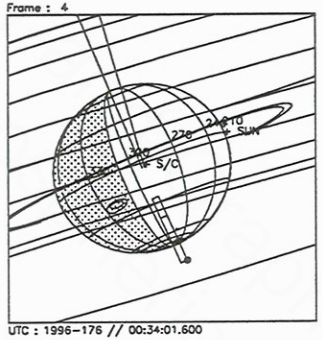

UTC : 1996-176 // 00:34:01.600
SCLK: 1/03492986:01:7:7

35:59
back to
G/G

Frame : 5

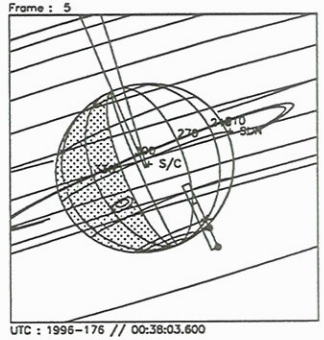

UTC : 1996-176 // 00:38:03.600
SCLK: 1/03492990:00:7:7

Frame : 6

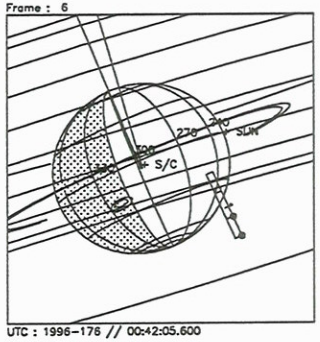

UTC : 1996-176 // 00:42:05.600
SCLK: 1/03492993:90:7:7

Frame : 7

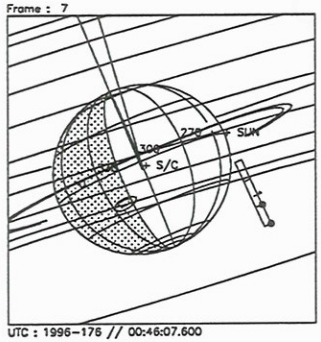

UTC : 1996-176 // 00:46:07.600
SCLK: 1/03492997:89:7:7

Frame : 8

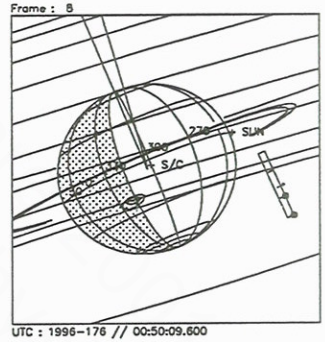

UTC : 1996-176 // 00:50:09.600
SCLK: 1/03493001:88:7:7

Start UTC_TIME : 1996-176 // 00:17:53.600
End UTC_TIME : 1996-176 // 00:50:14.933
Start SCLK : 1/03492970:05:7:7
Delta Time between FOV : 242.0000
FOVs : F Channel(0.1x0.4), N/G Channel(0.1x1.0)

Target Body : JUPITER
Target Cone/Clock : 103.48/ 93.51 Deg
S/C to Body Center : 3218337. Km (45.016745 Rj)
Z-axis Pointing (Ra / Dec) : 102.80 / 25.00 Deg

Activity ID:	Orbit G1	OAPEL JUDRKMAP		SeqNo 01-	
Title	Darkside map			**Instrument**	UVS
Requestor	UVS-AWG/W. KENT TOBISKA	**Team**	UVS	**Working Group**	AWG

Time System	CDS	**Load ID**	G1A	**Calendar Date**	06/24/96 Week 26

Start	JEE-CDS 00005678:00:0	96-176/00:50:14.933	JEE-003/23:41:05.333
End	JEE-CDS 00005556:00:0	96-176/02:53:36.266	JEE-003/21:37:44.000
Duration	00000122:00:0	000/02:03:21.333	000/02:03:21.333

Top Label	G1JUDRKMAP01-				
Bottom Label	realtime				
Plot Key	UVS	**Type**	SCI		
CDS Bytes	241	**Report Options**	BOTH	**Scan Platform**	Yes
CDS Source	OAP	**Spin State**	DUAL	**DMS**	No

Observation Objective

Darkside map of H Ly-a bulge at 340-360, 0-26 degrees longitude. Off planet to get Ly-a sky background.

Realtime observation at 10 bps for 2.0 hours; G/G Ly-a 88 step 2 position miniscan: even frames are centered at 1199.7 A (1131.5-1265.9) and the odd frames are centered at 1267.5 A (1199.7-1333.4). 10 RIMs UVS OFF/FIXED every 30 RIMs for PWS. Expect RTSFMT = D. Distance from Jupiter = 44 Rj.

Last cn/ck = TBD

Design Detail

```
PSID   CDS  RIM  COMMAND  PARAMETERS
384AC   00   00  COMMNT UVS RIM 0
 61AA   28   00+LOOPER DUR = 30 RIMS; REPEAT = 4; 61AA157AC
432AA   38   01+OPTRTM UVS_STATUS = INCLUDE; BS = 45
349AC   28   01+UVFLSH DISCRD,UVS
157AC   38   01  CMDRS   PLAN_DUR = 21 RIMS; EST_UVS_CMDS = 2
           02       1
34UVS/UVG:DF,FIXED,NORM,NORM,NORM,SAME,0,OFF,OFF,ON,ON,OFF,NOOVR,1,2C,7D,00,2C
           22      21
34UVS/OFF:C1,FIXED,NORM,NORM,NORM,SAME,0,OFF,OFF,ON,OFF,OFF,NOOVR,1,2C,05,00,00
165AC   36   02 TARGET Lat/lon = 0/340   RA/Dec = 205.58/-6.71 (no TMC)
117AB   37   02 CSMOS   3 Strips (29 RIMS strip; 1 RIM repos); PLAN_DUR = 90 RIMS; SLEW_RATE =
TBD
165AD   36   92 TARGET RA/Dec = 200.7/-5.7 (cn/ck = TBD)
```

11 mf - time to slew to BBG target

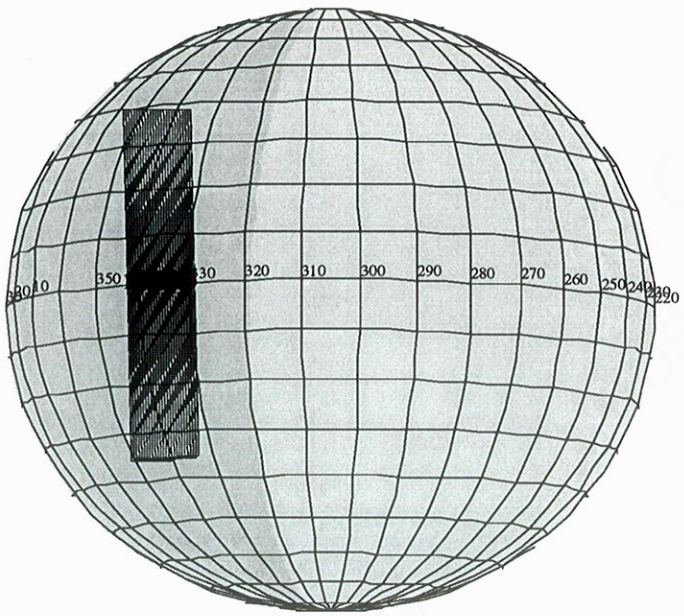

165AC:TT= 0 TMC= 1 C= 0.00 XC= 0.00 BS= 0/5800 TC= 1(0 340)
A= 364 pD= 0 SR=17.430 RA50=205.58 DEC50= -6.71 cone=104.39 clock= 93.62
117AB:#SB= 1 OR= 0.010 RR=12.000 BM=F RC= 1 BS= 0/5800
1:#s= 3 Cs= 0.00 XCs= 0.00 Cr= 2.50 XCr= 0.00 sD= 5278 rD= 182
165AD:TT= 0 TMC= 1 C= 0.00 XC= 0.00 BS= 0/2180 TC=15(-5.7 200.7)
A= 90 pD= 0 SR=17.430 RA50=200.70 DEC50= -5.70 cone= 99.55 clock= 92.52

ESIGN G1.0 kent : 2/26/1996 9:48:56

ILE:P.G1JUDRKMAP01

ENTRAL BODY:JUPITER III

INI:m.G1JUDRKMAP01

: EPH:/DATA/NAVIO/T-960110-ALL.NS

ERIAPSIS: THINNING:NONE :UVS 1

TART:JEE 96-180/00:31:20.266 -CDS 5676:00:0 BODY PLOT TIME:TARGET-TIME D= 0 S= 0.850

Galileo Graphics Software 2001
Planetary and Space Physics

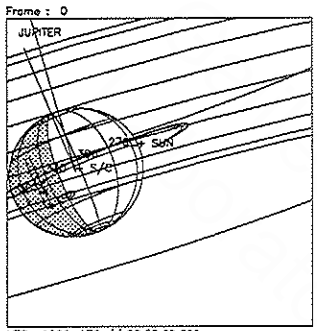

UTC : 1996-176 // 00:52:09.600
SCLK: 1/03493003:86:7:7

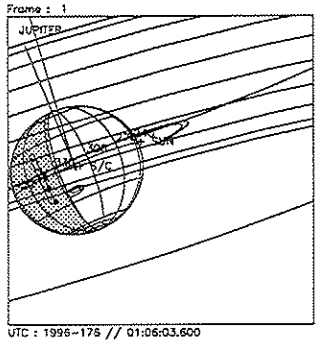

UTC : 1996-176 // 01:06:03.600
SCLK: 1/03493017:63:8:0

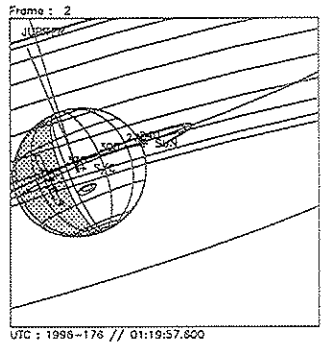

UTC : 1996-176 // 01:19:57.600
SCLK: 1/03493031:40:8:0

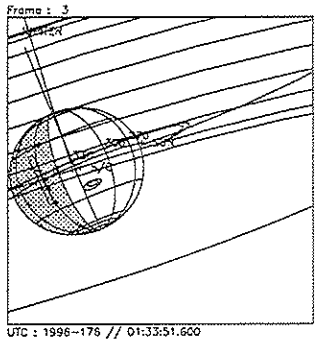

UTC : 1996-176 // 01:33:51.600
SCLK: 1/03493045:17:8:0

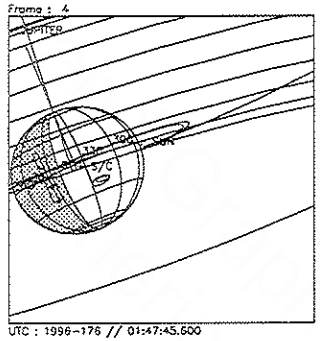

UTC : 1996-176 // 01:47:45.600
SCLK: 1/03493058:85:8:0

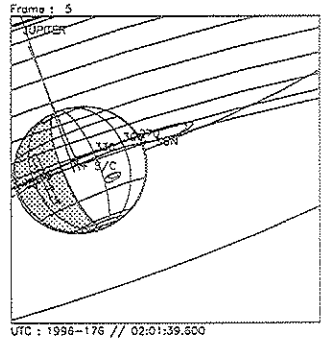

UTC : 1996-176 // 02:01:39.600
SCLK: 1/03493072:62:8:0

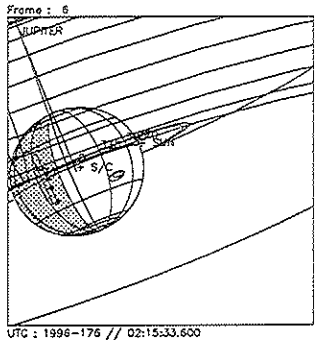

UTC : 1996-176 // 02:15:33.600
SCLK: 1/03493086:39:8:0

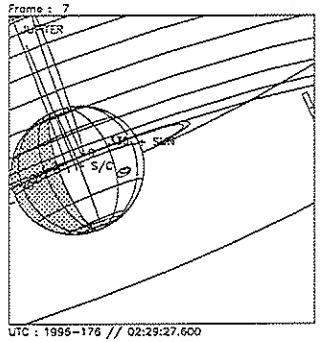

UTC : 1996-176 // 02:29:27.600
SCLK: 1/03493100:16:8:0

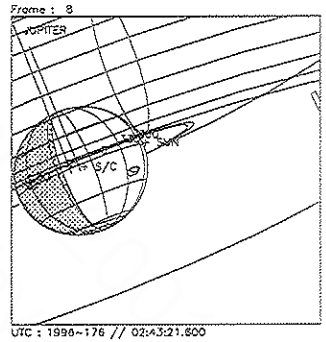

UTC : 1996-176 // 02:43:21.600
SCLK: 1/03493113:84:8:0

Start UTC_TIME : 1996-176 // 00:52:09.600
End UTC_TIME : 1996-176 // 02:43:23.933
Start SCLK : 1/03493003:86:7:7
Delta Time between FOV : 834.0000
FOVs : F Channel(0.1x0.4), N/G Channel(0.1x1.0)

Target Body : JUPITER
Target Cone/Clock : 103.64/ 93.51 Deg
S/C to Body Center : 3204282. Km (44.820152 Rj)
Z-axis Pointing (Ra / Dec) : 102.80 / 25.00 Deg

Activity ID:	Orbit G1	OAPEL	JUAURMAP	SeqNo	01-
Title	Auroral map			Instrument	UVS
Requestor	UVS-AWG/W. KENT TOBISKA	Team	UVS	Working Group	AWG

Time System	CDS	Load ID	G1A	Calendar Date	06/24/96	Week	26
Start	JEE-CDS 00005556:00:0	96-176/02:53:36.266		JEE-003/21:37:44.000			
End	JEE-CDS 00005464:00:0	96-176/04:26:37.600		JEE-003/20:04:42.666			
Duration	00000092:00:0	000/01:33:01.334		000/01:33:01.334			

Top Label	G1JUAURMAP01-				
Bottom Label	realtime				
Plot Key	UVS	Type	SCI		
CDS Bytes	282	Report Options	BOTH	Scan Platform	Yes
CDS Source	OAP	Spin State	DUAL	DMS	No

Observation Objective

Auroral map of southern dayside - nightside assymetry at 82-30 deg longitude.

Realtime observation at 10 bps for 1.5 hours; G/G full-scan and 2 RIMS F/G full-scan on brightside. 10 RIMs UVS OFF/FIXED every 30 RIMS for PWS. Expect RTSFMT = D. Distance from Jupiter = 43 Rj.

Last cn/ck = TBD

Design Detail

```
PSID   CDS  RIM  COMMAND PARAMETERS
384AD   00   00  COMMNT UVS RIM 0
 61AB   28   00+LOOPER DUR = 30 RIMS; REPEAT = 3; 61AB157AD
349AZ   28   01+UVFLSH DISCRD,UVS
157AD   38   01  CMDRS   PLAN_DUR = 21 RIMS; EST_UVS_CMDS = 2
             02       1
34UVS/UVG:07,SCAN,NORM,NORM,NORM,SAME,0,OFF,OFF,ON,ON,OFF,NOOVR,1,2C,9D,00,00
             22      21
34UVS/OFF:C1,FIXED,NORM,NORM,NORM,SAME,0,OFF,OFF,ON,OFF,OFF,NOOVR,1,2C,05,00,00
165AE   36   02  TARGET Lat/lon = -60/82 RA/Dec = 205.58/-7.93 (no TMC)
165AR   36   32  TARGET Lat/lon = -60/30 RA/Dec = 205.07/-7.70 (no TMC)
165AS   36   62  TARGET Lat/lon = -60/49 RA/Dec = 205.22/-7.77 (no TMC)
349AD   28   78+UVFLSH PACKET,UVS
157AE   24   79  CMDRS   PLAN_DUR = 1 RIM; EST_UVS_CMDS = 1
             80       1
34UVS/UVF:07,SCAN,NORM,NORM,NORM,SAME,0,ON,OFF,ON,ON,OFF,NOOVR,1,00,9C,01,2C
349AE   28   81+UVFLSH PACKET,UVS
```

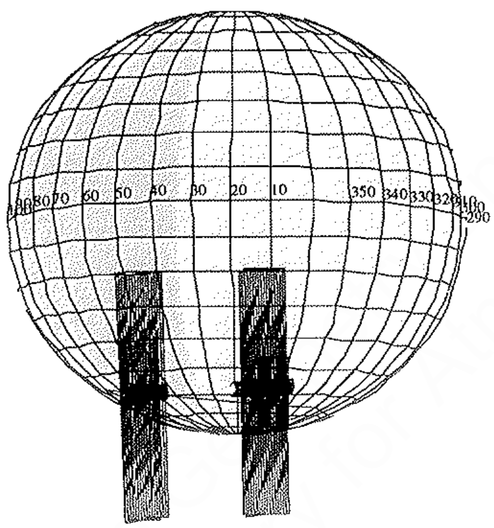

165AE:TT= 0 TMC= 1 C= 0.00 XC= 0.00 BS= 0/8004 TC= 1(-60 82)
A= 364 pD= 0 SR=17.430 RA50=205.58 DEC50= -7.93 cone=104.88 clock= 92.47
165AR:TT= 0 TMC= 1 C= 0.00 XC= 0.00 BS= 0/3464 TC= 1(-60 30)
A= 364 pD= 0 SR=17.450 RA50=205.07 DEC50= -7.70 cone=104.33 clock= 92.47
165AS:TT= 0 TMC= 1 C= 0.00 XC= 0.00 BS= 0/8924 TC= 1(-60 49)
A= 364 pD= 0 SR=17.450 RA50=205.22 DEC50= -7.77 cone=104.49 clock= 92.46

ESIGN G1.0 kent : 2/21/1996 14: 3:28

ILE:P.G1JUAURMAP01

ENTRAL BODY:JUPITER III

INI:m.G1JUAURMAP01

EPH:/DATA/NAVIO/T-960110-ALL.NS

ERIAPSIS: THINNING:NONE :UVS 1

TART:JEE 96-180/00:31:20.266 -CDS 5554:00:0 BODY PLOT TIME:TARGET-TIME D= 0 S= 0.600

Frame : 0

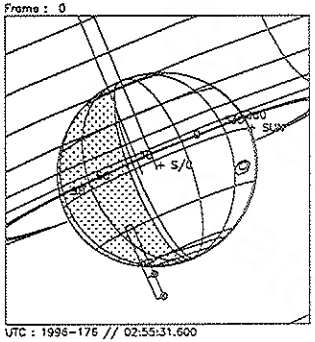

UTC : 1996-176 // 02:55:31.600
SCLK: 1/03493125:87:8:0

Frame : 1

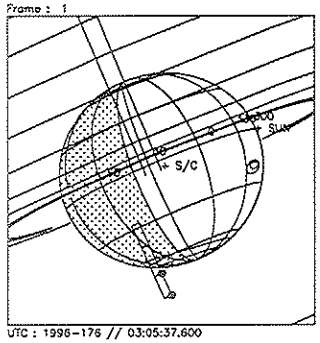

UTC : 1996-176 // 03:05:37.600
SCLK: 1/03493135:86:8:0

Frame : 2

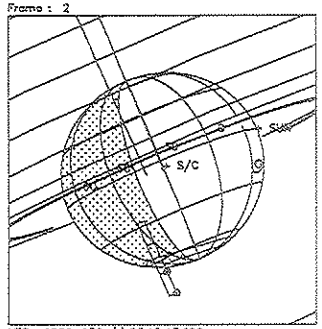

UTC : 1996-176 // 03:15:43.600
SCLK: 1/03493145:85:8:0

AUR MAP

Frame : 3

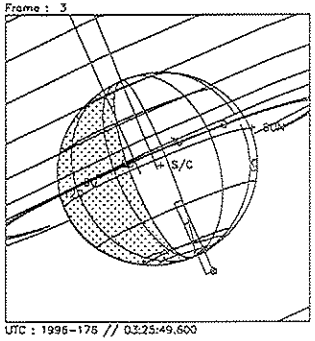

UTC : 1996-176 // 03:25:49.600
SCLK: 1/03493155:84:8:0

Frame : 4

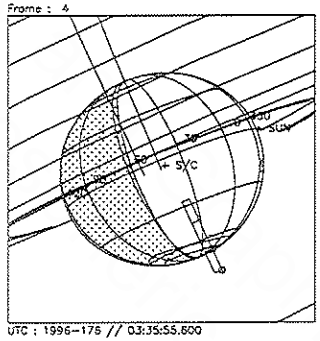

UTC : 1996-176 // 03:35:55.600
SCLK: 1/03493165:83:8:0

Frame : 5

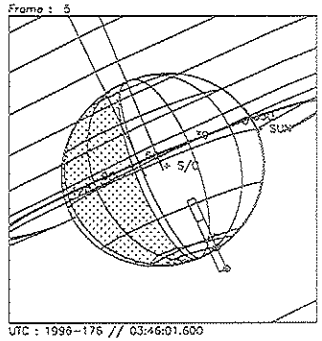

UTC : 1996-176 // 03:46:01.600
SCLK: 1/03493175:82:8:0

Frame : 6

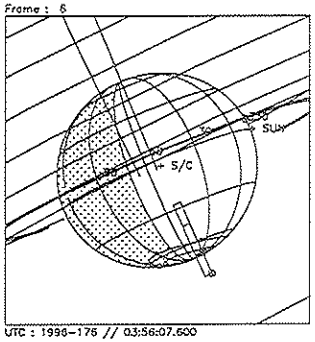

UTC : 1996-176 // 03:56:07.600
SCLK: 1/03493185:81:8:0

Frame : 7

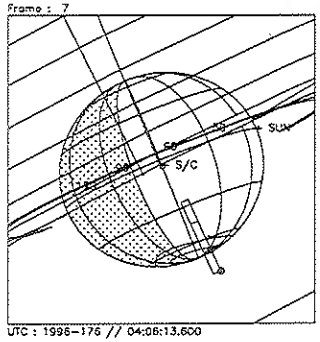

UTC : 1996-176 // 04:06:13.600
SCLK: 1/03493195:80:8:0

Frame : 8

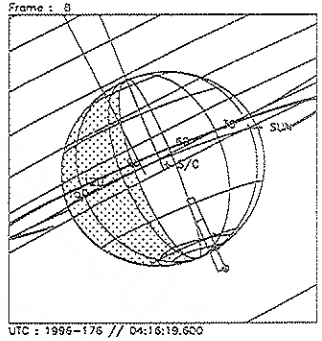

UTC : 1996-176 // 04:16:19.600
SCLK: 1/03493205:79:8:0

Start UTC_TIME : 1996-176 // 02:55:31.600
End UTC_TIME : 1996-176 // 04:16:24.933
Start SCLK : 1/03493125:87:8:0
Delta Time between FOV : 606.0000
FOVs : F Channel(0.1x0.4), N/G Channel(0.1x1.0)

Target Body : JUPITER
Target Cone/Clock : 104.24/ 93.50 Deg
S/C to Body Center : 3153465. Km (44.109334 Rj)
Z-axis Pointing (Ra / Dec) : 102.80 / 25.00 Deg

Activity ID:	Orbit G1	OAPEL JUFIXTMD		SeqNo 01-	
Title	Fixed local time map			Instrument	UVS
Requestor	UVS-AWG/W. KENT TOBISKA	Team UVS		Working Group	AWG

Time System CDS	Load ID G1A	Calendar Date 06/24/96	Week 26		
Start	JEE-CDS 00005464:00:0	96-176/04:26:37.600	JEE-003/20:04:42.666		
End	JEE-CDS 00004862:00:0	96-176/14:35:18.933	JEE-003/09:56:01.333		
Duration	00000602:00:0	000/10:08:41.333	000/10:08:41.333		

Top Label	G1JUFIXTMD01-				
Bottom Label	realtime				
Plot Key	UVS	Type	SCI		
CDS Bytes	205	Report Options	BOTH	Scan Platform	Yes
CDS Source	OAP	Spin State	DUAL	DMS	No

Observation Objective

Fixed local time map for global coverage over 1 Jupiter rotation on northern auroral darkside. Use color ratios for particle energies.

Realtime observation at 10 bps for 10.0 hours; G/G full scan. 10 RIMs UVS OFF/FIXED every 30 RIMs for PWS. Expect RTSFMT = D. Distance from Jupiter = 43-40 Rj.

Last cn/ck = TBD

Design Detail

```
PSID   CDS RIM COMMAND PARAMETERS
384AE   00   00 COMMNT UVS RIM 0
 61AC   28   00+LOOPER DUR = 30 RIMS; REPEAT = 20; 61AC157AF
349AF   28   01+UVFLSH DISCRD,UVS
157AF   38   01 CMDRS   PLAN_DUR = 21 RIMS; EST_UVS_CMDS = 2
          02       1
34UVS/UVG:07,SCAN,NORM,NORM,NORM,SAME,0,OFF,OFF,ON,ON,OFF,NOOVR,1,2C,9D,00,00
          22      21
34UVS/OFF:C1,FIXED,NORM,NORM,NORM,SAME,0,OFF,OFF,ON,OFF,OFF,NOOVR,1,2C,05,00,00
165AH   36   02 TARGET Lat/lon = 55/125 RA/Dec = 206.78/-6.24 (no TMC)
117AC   37   02 CSMOS   20 Strips (29 RIMS strip; 1 RIM repos); PLAN_DUR = 600 RIMS; SLEW_RATE
= 0.01
432AB   38  601+OPTRTM UVS_STATUS = EXCLUDE; BS = 45
```

Frame : 0

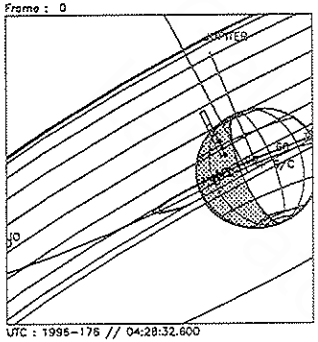

UTC : 1996-176 // 04:28:32.600
SCLK: 1/03493217:87:3:0

Frame : 1

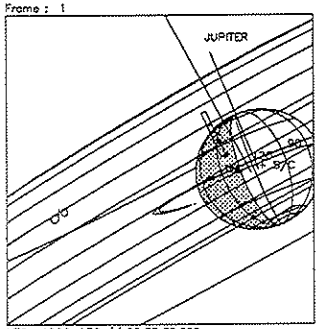

UTC : 1996-176 // 05:38:32.600
SCLK: 1/03493287:17:3:1

Frame : 2

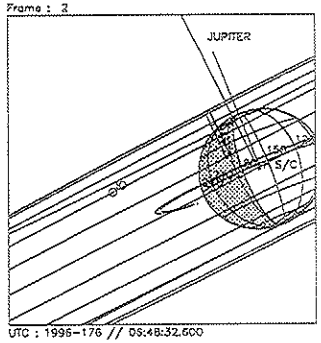

UTC : 1996-176 // 06:48:32.600
SCLK: 1/03493355:38:3:1

Frame : 3

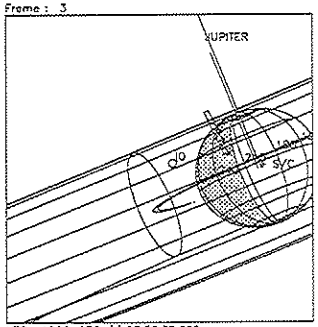

UTC : 1996-176 // 07:58:32.600
SCLK: 1/03493425:59:3:1

Frame : 4

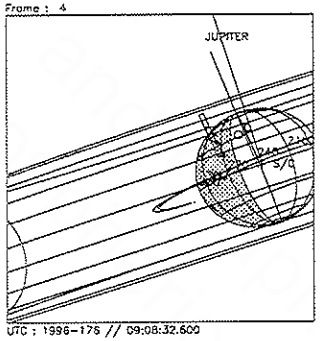

UTC : 1996-176 // 09:08:32.600
SCLK: 1/03493494:80:3:2

Frame : 5

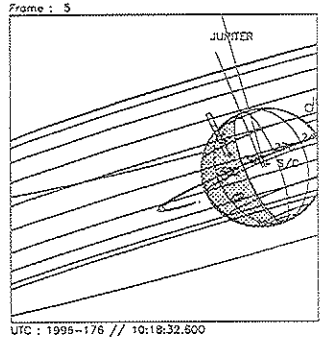

UTC : 1996-176 // 10:18:32.600
SCLK: 1/03493564:10:3:2

Frame : 6

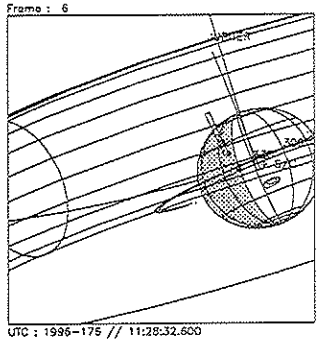

UTC : 1996-176 // 11:28:32.600
SCLK: 1/03493633:31:3:2

Frame : 7

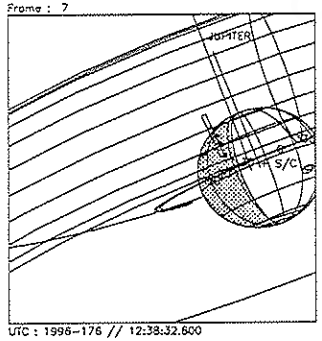

UTC : 1996-176 // 12:38:32.600
SCLK: 1/03493702:52:3:3

Frame : 8

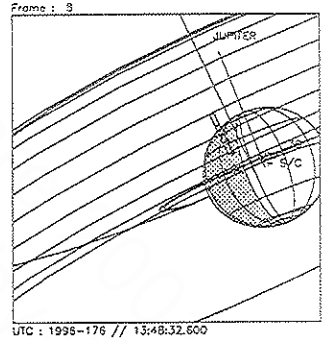

UTC : 1996-176 // 13:48:32.600
SCLK: 1/03493771:73:3:3

Start UTC_TIME : 1996-176 // 04:28:32.600
End UTC_TIME : 1996-176 // 14:25:05.933
Start SCLK : 1/03493217:87:3:0
Delta Time between FOV : 4200.000
FOVs : F Channel(0.1x0.4), N/G Channel(0.1x1.0)

Target Body : JUPITER
Target Cone/Clock : 104.71/ 93.49 Deg
S/C to Body Center : 3114921. Km (43.570200 Rj)
Z-axis Pointing (Ra / Dec) : 102.80 / 25.00 Deg

Activity ID:	Orbit G1	OAPEL HUSTRCAL		SeqNo	01-
Title	Star calibration			Instrument	UVS
Requestor	UVS-AWG/W. KENT TOBISKA	Team	UVS	Working Group	AWG

Time System	CDS	Load ID	G1A	Calendar Date	06/25/96	Week	26

Start	JEE-CDS 00003871:00:0	96-177/07:17:19.600	JEE-002/17:14:00.666
End	JEE-CDS 00003777:00:0	96-177/08:52:22.266	JEE-002/15:38:58.000
Duration	00000094:00:0	000/01:35:02.666	000/01:35:02.666

Top Label	G1HUSTRCAL01-				
Bottom Label	realtime				
Plot Key	UVS	Type	SCI		
CDS Bytes	315	Report Options	BOTH	Scan Platform	Yes
CDS Source	OAP	Spin State	DUAL	DMS	No

Observation Objective

Star calibration at beginning of tour on delta-Scorpii (Ra=239.34/Dec=-22.48). Type B0 star.

Realtime observation at 10 bps for 1.5 hours; F/G full scan; 2 one-half hour slews at the slowest rate (0.01 mrad/sec) using an 18 mrad slew length. Capture sky background on the last one-half hour to compare with RADMON data. 10 RIMs UVS OFF/FIXED every 30 RIMs for PWS. Expect RTSFMT = D. Distance from Jupiter = 34 Rj.

Last cn/ck = TBD

Design Detail

```
PSID   CDS  RIM COMMAND PARAMETERS
384AF   00   00 COMMNT UVS RIM 0
 61AD   28   02+LOOPER DUR = 30 RIMS; REPEAT = 3; 61AD157AG
349AG   28   03+UVFLSH DISCRD,UVS
157AG   38   03 CMDRS   PLAN_DUR = 21 RIMS; EST_UVS_CMDS = 2
           04       1
34UVS/UVF:07,SCAN,NORM,NORM,NORM,SAME,0,ON,OFF,ON,ON,OFF,NOOVR,1,00,9C,01,2C
           24      21
34UVS/OFF:C1,FIXED,NORM,NORM,NORM,SAME,0,OFF,OFF,ON,OFF,OFF,NOOVR,1,2C,05,00,00
165AI   36   04 TARGET RA/Dec = 239.88/-22.59 (use offset = 9 mrad)
117AD   37   04 CSMOS  2 Strips (29 RIMS strip; 1 RIM repos); PLAN_DUR = 60 RIMS; SLEW_RATE =
0.01
                     (cn_del_s = -16.5 mrad, cn_del_r = 23 mrad)
349AH   28   23+UVFLSH PACKET,UVS
349AI   28   53+UVFLSH PACKET,UVS
349AJ   28   65+UVFLSH DISCRD,UVS
165AJ   36   66 TARGET RA/Dec = 239.34/-22.48 (use offset = -18 mrad)
349AK   28   83+UVFLSH PACKET,UVS
```

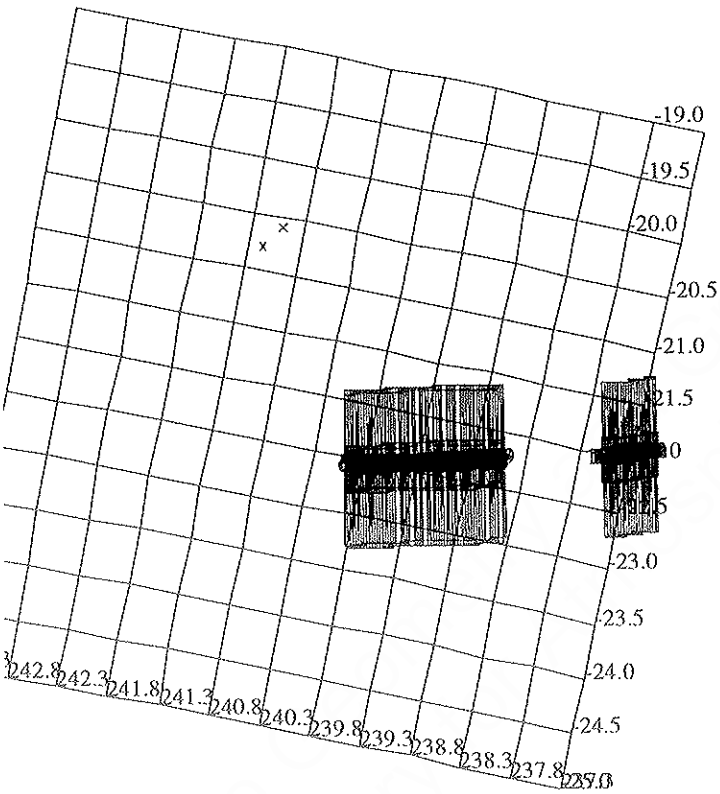

165AI:TT= 0 TMC= 1 C= 9.00 XC= 0.00 BS= 0/5038 TC=15(-22.48 239.34)
A= 728 pD= 0 SR=17.450 RA50=239.89 DEC50=-22.59 cone=140.82 clock= 88.72
117AD:#SB= 1 OR= 0.010 RR=12.000 BM=F RC= 1 BS= 0/5038
1:#s= 2 Cs= -16.50 XCs= 0.00 Cr= 23.00 XCr= 0.00 sD= 5278 rD= 182
165AJ:TT= 0 TMC= 1 C= -18.00 XC= 0.00 BS= 0/6322 TC=15(-22.48 239.34)
A= 364 pD= 0 SR=17.450 RA50=238.25 DEC50=-22.25 cone=139.27 clock= 88.72

ESIGN G1.0 kent : 2/21/1996 12:58:39

ILE:P.G1HUSTRCAL01

ENTRAL BODY:JUPITER III

INI:m.G1HUSTRCAL01

EPH:/DATA/NAVIO/T-960110-ALL.NS

ERIAPSIS:

THINNING:NONE :UVS 1

TART:JEE 96-180/00:31:20.266 -CDS 3867:00:0

BODY PLOT TIME:TARGET-TIME D= 0 S= 0.500

Wed Apr 17 20:35:33 1996

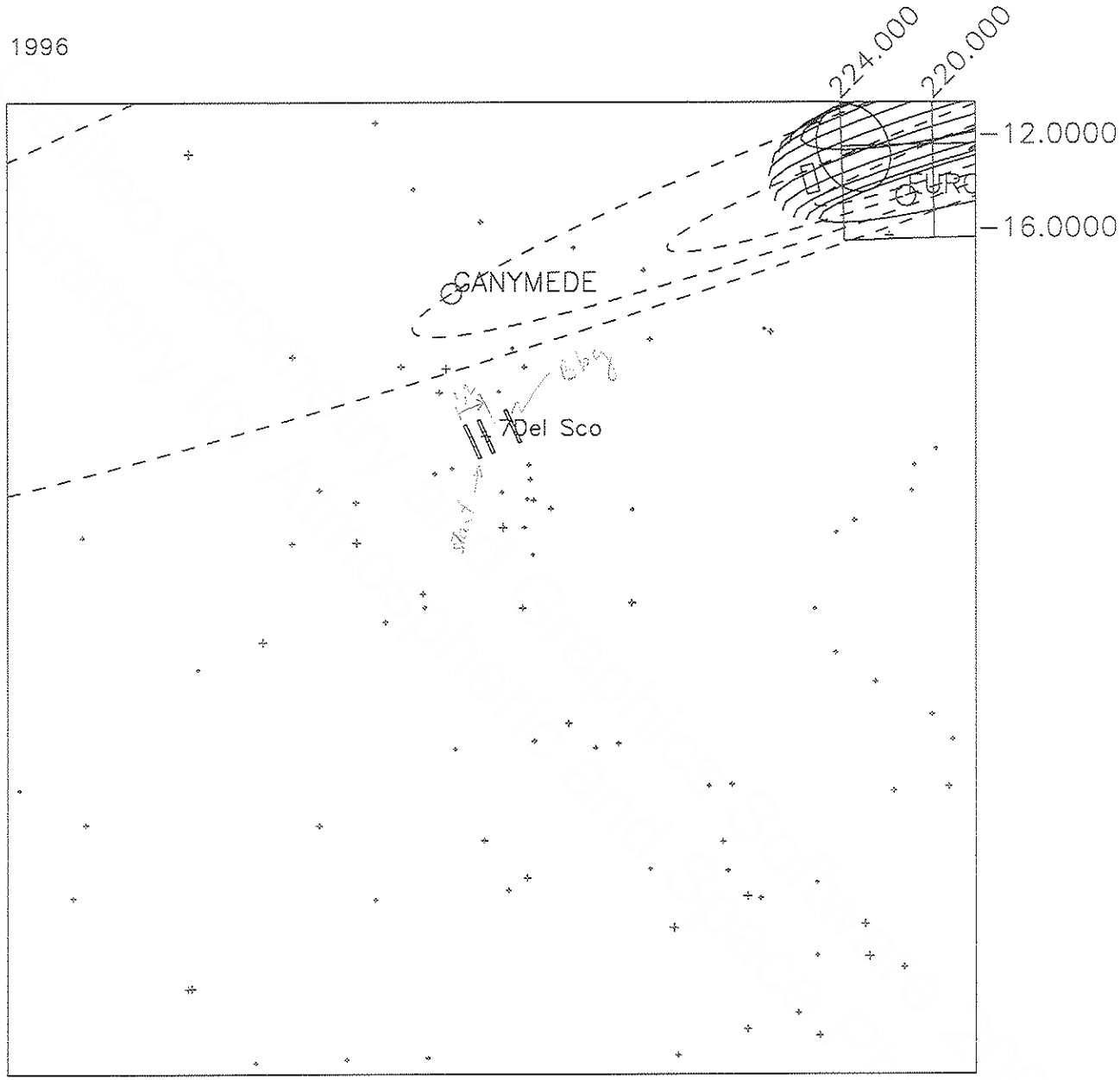

Start UTC_TIME : 1996-177 // 07:17:15.000
No End Time :
Start SCLK : 1/03494808:90:0:0

Target Body : JUPITER
Target Ra/Dec : 215.44/-11.27 Deg
S/C to Body Center : 2415032. Km (33.780456 Rj)
Z-axis Pointing (Ra / Dec) : 102.80 / 25.00 Deg

Wed Apr 17 20:26:09 1996

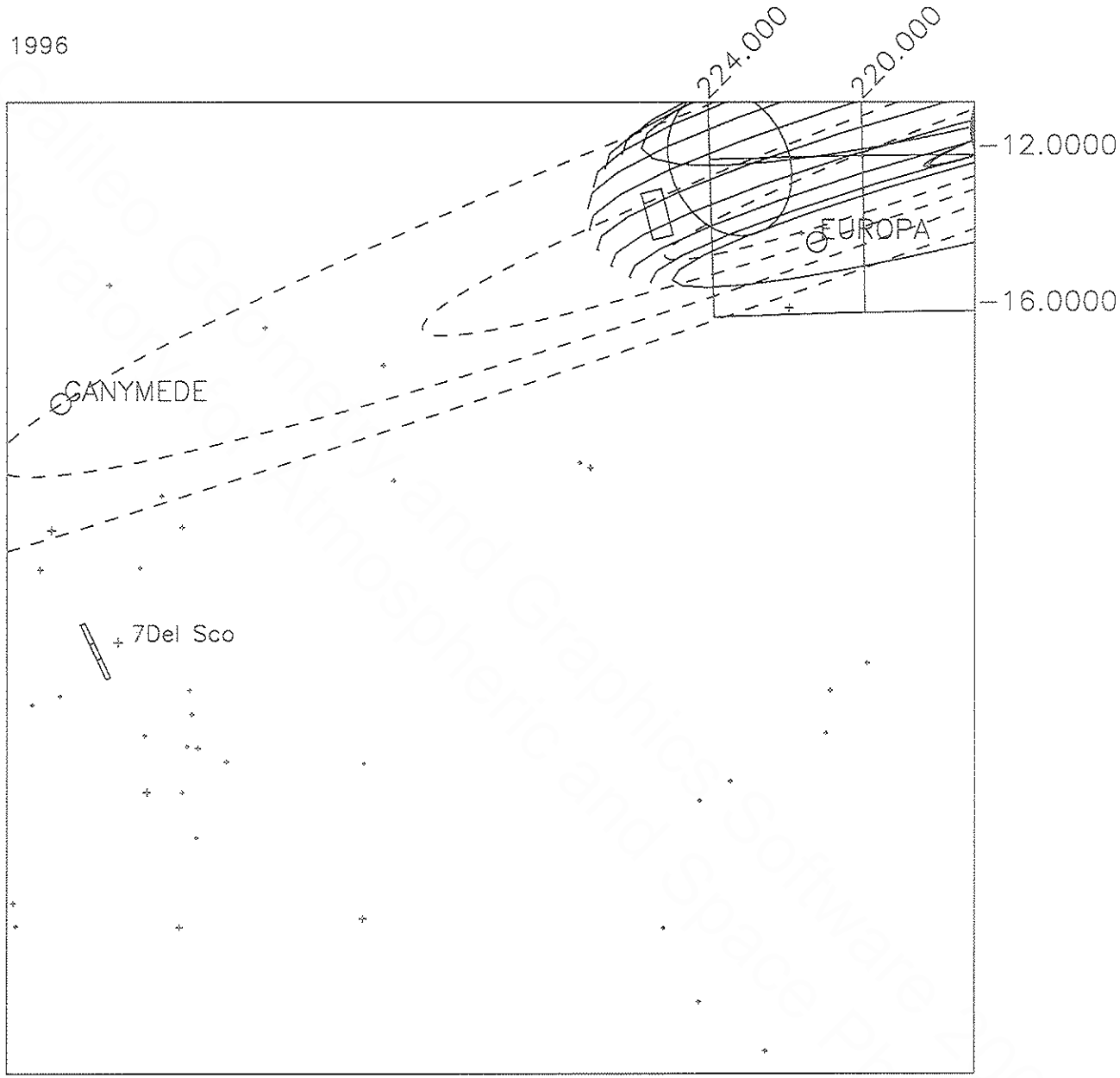

Start UTC_TIME : 1996-177 // 07:17:15.000
No End Time :
Start SCLK : 1/03494808:90:0:0

Target Body : JUPITER
Target Ra/Dec : 215.44/-11.27 Deg
S/C to Body Center : 2415032. Km (33.780456 Rj)
Z-axis Pointing (Ra / Dec) : 102.80 / 25.00 Deg

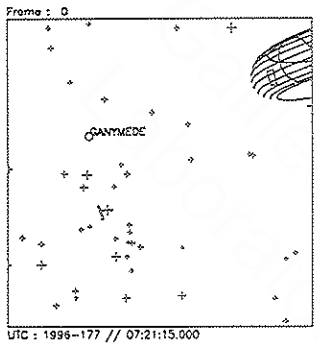

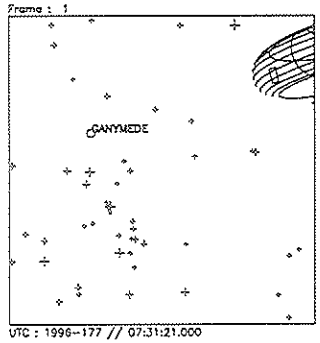

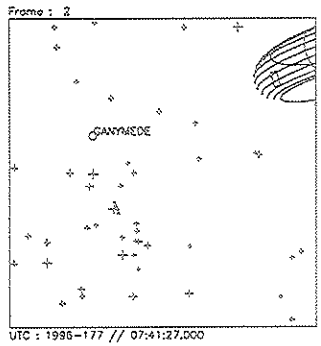

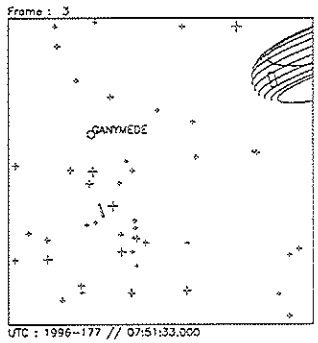

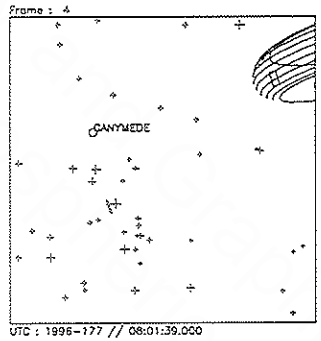

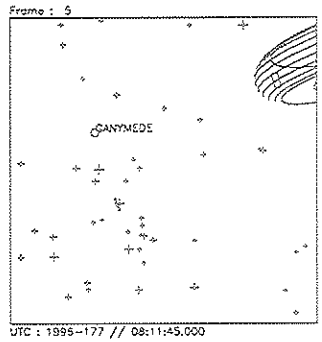

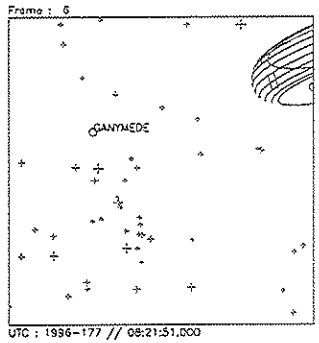

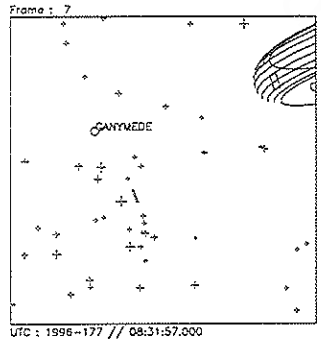

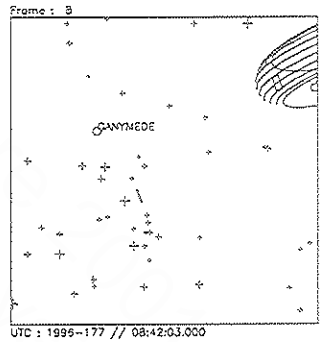

Start UTC_TIME : 1996-177 // 07:21:15.000
End UTC_TIME : 1996-177 // 08:42:09.000
Start SCLK : 1/0349481286:0:0
Delta Time between FOV : 606.0000
FOVs : F Channel(0.1x0.4), N/G Channel(0.1x1.0)

Target Body : JUPITER
Target Cone/Clock : 115.17/ 93.28 Deg
S/C to Body Center : 241320:. Km (33.754961 Rj)
Z-axis Pointing (Ra / Dec) : 102.80 / 25.00 Deg

Activity ID:	Orbit G1	OAPEL JUFTKR2E		**SeqNo**	12-
Title	GRS feature track			**Instrument**	UVS
Requestor	UVS-AWG/W. KENT TOBISKA	**Team**	UVS	**Working Group**	AWG

Time System	CDS	**Load ID**	G1A	**Calendar Date**	06/26/96 Week 26
Start	JTE-CDS 00002084:00:0	96-178/13:24:10.933		JTE-001/11:07:09.333	
End	JTE-CDS 00002070:00:0	96-178/13:38:20.266		JTE-001/10:53:00.000	
Duration	00000014:00:0	000/00:14:09.333		000/00:14:09.333	

Top Label	G1JUFTKR2E12-				
Bottom Label	realtime				
Plot Key	UVS	**Type**	SCI		
CDS Bytes	333	**Report Options**	BOTH	**Scan Platform**	Yes
CDS Source	OAP	**Spin State**	DUAL	**DMS**	No

Observation Objective

GRS phase angle 40, emission angle 1, SSI (G1JSGRSEM201).

332	321	312	(lat)	(lon)
3	2	1		-12.0
6	5	4		-21.5

Realtime observation at 10 bps for 12 RIMs; F/F full scan covers 6 equivalent SSI frames. Expect RTSFMT = B. Distance from Jupiter = 22 Rj.

Last cn/ck = TBD

Design Detail

```
PSID   CDS  RIM COMMAND PARAMETERS
384AH   00   00 COMMNT UVS RIM 0
349AL   28   00+UVFLSH DISCRD,UVS
157AH   38   01 CMDRS   PLAN_DUR = 13 RIMS; EST_UVS_CMDS = 2
             02      1
34UVS/UVF:07,SCAN,NORM,NORM,NORM,SAME,0,ON,OFF,OFF,ON,OFF,NOOVR,1,00,9C,00,00
             14      13
34UVS/OFF:C1,FIXED,NORM,NORM,NORM,SAME,0,OFF,OFF,ON,OFF,OFF,NOOVR,1,2C,05,00,00
165AK   36   02 TARGET Lat/lon = -22.3/318 (cn off=-8.0 mrad; xcn off=6.9 mrad)
                       (RA/Dec = 238.23/-20.00)
117AE   63   02 CSMOS   6 strips; 3 subcsmos
349AM   28   02+UVFLSH PACKET,UVS (1)
349AN   28   04+UVFLSH PACKET,UVS (2)
349AO   28   06+UVFLSH PACKET,UVS (3)
349AP   28   08+UVFLSH PACKET,UVS (4)
349AQ   28   10+UVFLSH PACKET,UVS (5)
349KP   28   12+UVFLSH PACKET,UVS (6)
```

G1 FTRK 2E12

1st target – 138.288 Cn
92.503 Ck

2nd target – 138.741 Cn
92.503 Ck

3rd target – 139.194 Cn
92.503 Ck

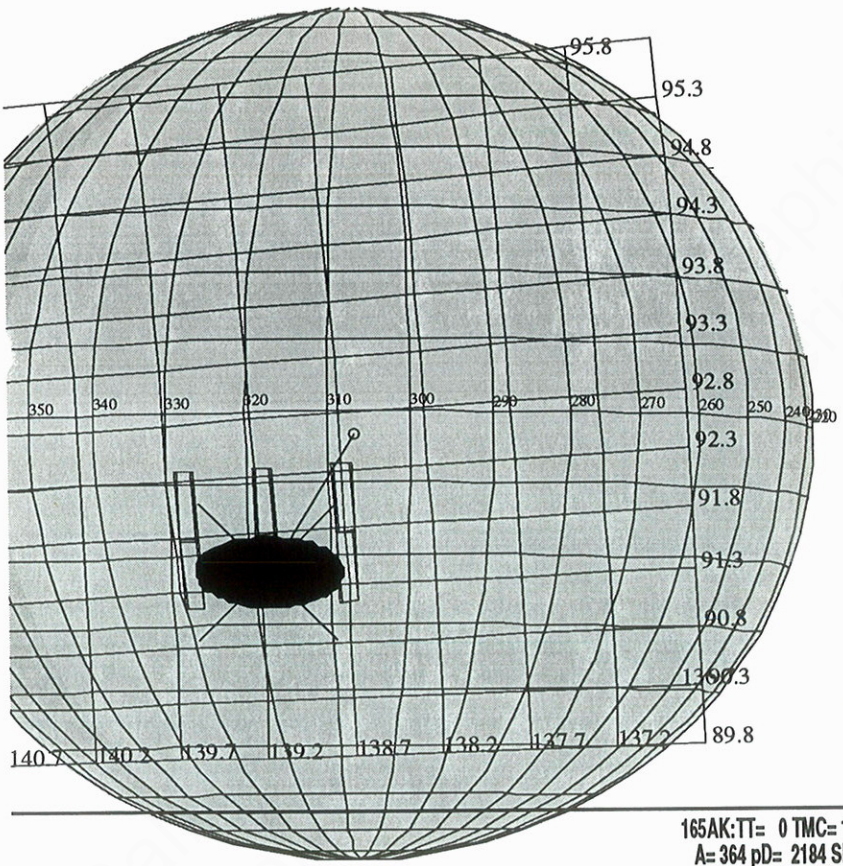

4th target – 138.253 Cn
92.118 Ck

5th target – 138.706 Cn
92.118 Ck

6th target – 139.159 Cn
92.118 Ck

165AK:TT= 0 TMC= 1 C= -8.00 XC= 6.90 BS= 0/9905 TC= 1(-22.3 318)
A= 364 pD= 2184 SR=17.430 RA50=238.23 DEC50=-20.00 cone=138.70 clock= 92.05
117AE:#SB= 3 OR= 0.010 RR=12.000 BM=F RC= 1 BS= 0/9905
1:#s= 3 Cs= 0.00 XCs= 0.00 Cr= 7.70 XCr= 0.00 sD= 272 rD= 92
2:#s= 1 Cs= 0.00 XCs= 0.00 Cr= -16.00 XCr= -7.00 sD= 272 rD= 92
3:#s= 2 Cs= 0.00 XCs= 0.00 Cr= 7.70 XCr= 0.00 sD= 272 rD= 92

ESIGN G1.0 kent : 4/20/1996 18:37:54

ILE:P.G1JUFTKR2E12

ENTRAL BODY:JUPITER III

INI:m.G1JUFTKR2E12

` EPH:/DATA/NAVIO/T-960110-ALL.NS

ERIAPSIS: THINNING:NONE :UVS 10

TART:JTE 96-180/00:31:20.266 -CDS 2082:00:0 BODY PLOT TIME:TARGET-TIME D= 2184 S= 1.200

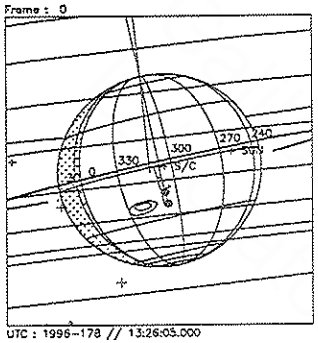

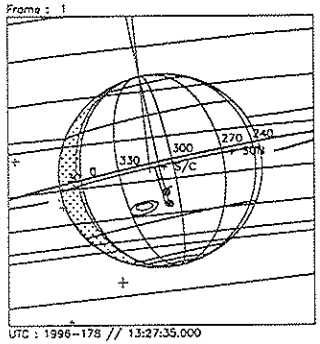

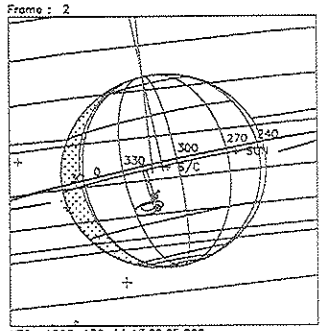

Feature Track 2E12

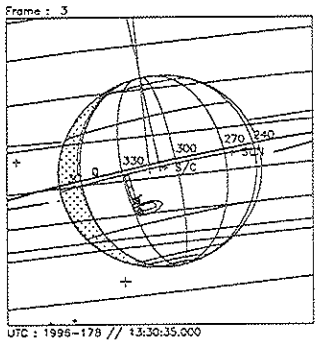

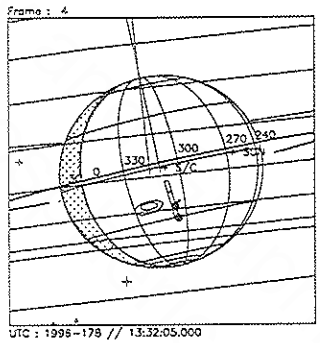

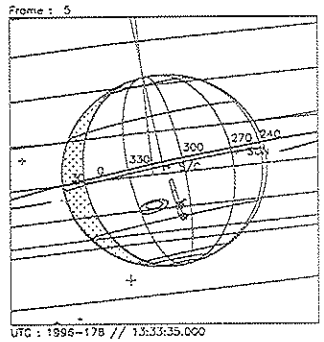

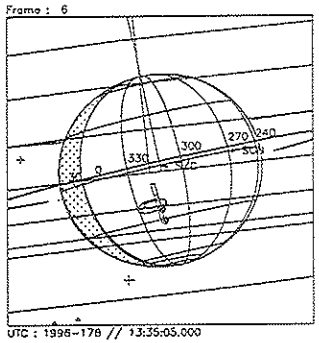

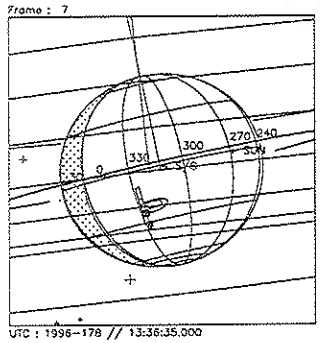

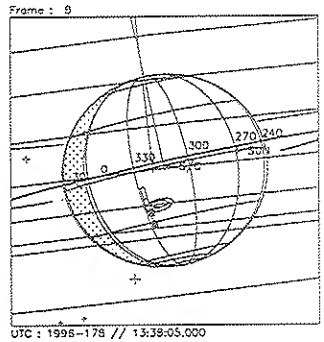

Start UTC_TIME : 1996-178 // 13:26:05.000
End UTC_TIME : 1996-178 // 13:38:13.000
Start SCLK : 1/03496597:86:1:0
Delta Time between FOV : 90.00000
FOVs : F Channel(0.1x0.4), N/G Channel(0.1x1.0)

Target Body : JUPITER
Target Cone/Clock : 138.61/ 92.62 Deg
S/C to Body Center : 1552670. Km (21.718100 Rj)
Z-axis Pointing (Ra / Dec) : 102.80 / 25.00 Deg

Activity ID:	Orbit G1	OAPEL	JUFTKR2E	SeqNo	13-
Title	GRS feature track			Instrument	UVS
Requestor	UVS-AWG/W. KENT TOBISKA	Team	UVS	Working Group	AWG

Time System	CDS	Load ID	G1A	Calendar Date	06/26/96 Week 26
Start	JTE-CDS 00002070:00:0	96-178/13:38:20.266		JTE-001/10:53:00.000	
End	JTE-CDS 00002050:00:0	96-178/13:58:33.600		JTE-001/10:32:46.666	
Duration	00000020:00:0	000/00:20:13.334		000/00:20:13.334	

Top Label	G1JUFTKR2E13-				
Bottom Label	realtime				
Plot Key	UVS	Type	SCI		
CDS Bytes	223	Report Options	BOTH	Scan Platform	Yes
CDS Source	OAP	Spin State	DUAL	DMS	No

Observation Objective

GRS phase angle 40, emission angle 1, SSI (G1JSGRSEM201).

Realtime observation at 10 bps for 20 RIMs; F/G full scan covers 6 equivalent SSI frames (3x2). Expect RTSFMT = B. Distance from Jupiter = 22 Rj.

Last cn/ck = TBD

Design Detail

```
PSID   CDS RIM COMMAND PARAMETERS
384AI   00   00 COMMNT UVS RIM 0
349AR   28   00+UVFLSH DISCRD,UVS
157AI   38   01 CMDRS   PLAN_DUR = 19 RIMS; EST_UVS_CMDS = 2
            02       1
34UVS/UVF:07,SCAN,NORM,NORM,NORM,SAME,0,ON,OFF,ON,ON,OFF,NOOVR,1,00,9C,01,2C
            20      19
34UVS/OFF:C1,FIXED,NORM,NORM,NORM,SAME,0,OFF,OFF,ON,OFF,OFF,NOOVR,1,2C,05,00,00
165AL   36   02 TARGET Lat/lon = -22.3/318 (cn off = -15.0) (RA/Dec = 237.62/-20.29)
117AF   37   02 CSMOS   1 strips
349AS   28   06+UVFLSH PACKET,UVS (1,4)
349AT   28   12+UVFLSH PACKET,UVS (2,5)
349AU   28   18+UVFLSH PACKET,UVS (3,6)
```

Frame : 0

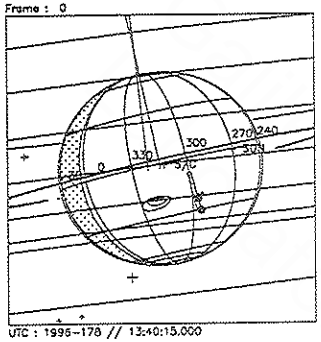

UTC : 1996-178 // 13:40:15.000
SCLK: 1/03496611:87:1:0

Frame : 1

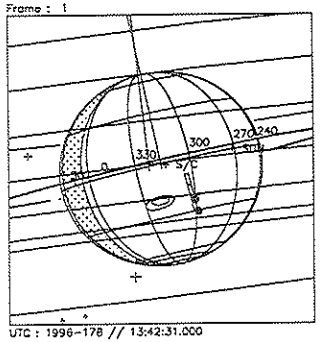

UTC : 1996-178 // 13:42:31.000
SCLK: 1/03496614:18:1:0

Frame : 2

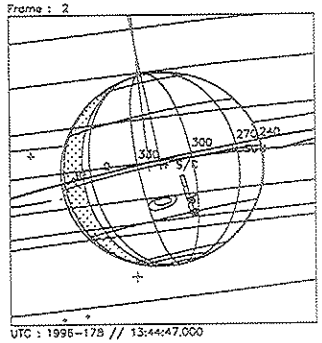

UTC : 1996-178 // 13:44:47.000
SCLK: 1/03496616:40:1:0

Feature Track 2E13

Frame : 3

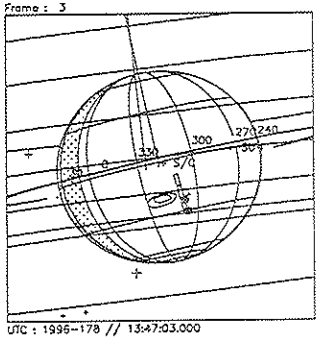

UTC : 1996-178 // 13:47:03.000
SCLK: 1/03496618:62:1:0

Frame : 4

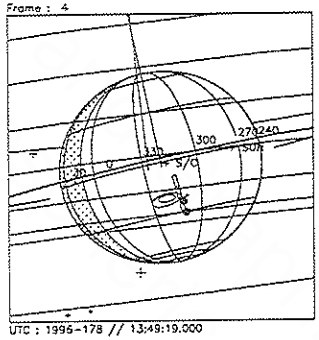

UTC : 1996-178 // 13:49:19.000
SCLK: 1/03496620:84:1:0

Frame : 5

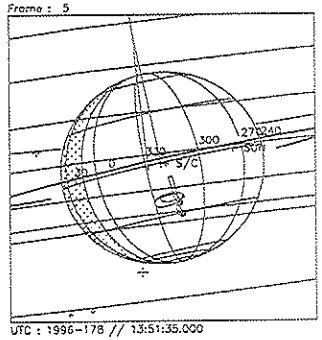

UTC : 1996-178 // 13:51:35.000
SCLK: 1/03496623:15:1:0

Frame : 6

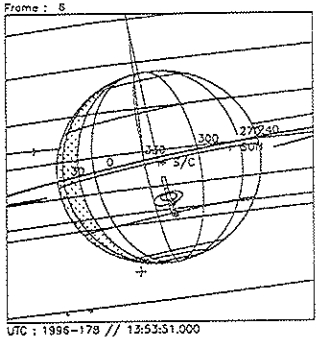

UTC : 1996-178 // 13:53:51.000
SCLK: 1/03496625:37:1:0

Frame : 7

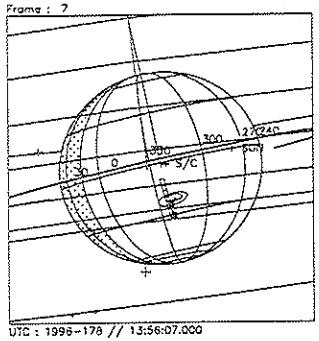

UTC : 1996-178 // 13:56:07.000
SCLK: 1/03496627:59:1:0

Frame : 8

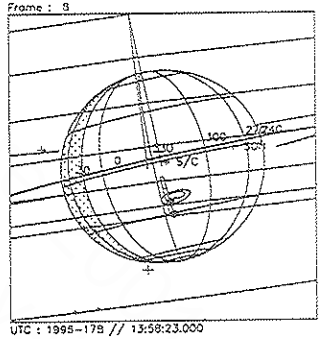

UTC : 1996-178 // 13:58:23.000
SCLK: 1/03496629:81:1:0

Start UTC_TIME : 1996-178 // 13:40:15.000
End UTC_TIME : 1996-178 // 13:58:27.000
Start SCLK : 1/03496611:87:1:0
Delta Time between FOV : 136.0000
FOVs : F Channel(0.1x0.4), N/G Channel(0.1x1.0)

Target Body : JUPITER
Target Cone/Clock : 138.90/ 92.61 Deg
S/C to Body Center : 1545733. Km (21.621056 Rj)
Z-axis Pointing (Ra / Dec) : 102.80 / 25.00 Deg

Activity ID:	Orbit G1	OAPEL JUFTKR2E		**SeqNo**	22-
Title	GRS feature track			**Instrument**	UVS
Requestor	UVS-AWG/W. KENT TOBISKA	**Team**	UVS	**Working Group**	AWG

Time System	CDS	**Load ID**	G1A	**Calendar Date**	06/26/96 Week 26
Start	JTE-CDS 00002014:00:0	96-178/14:34:57.600		JTE-001/09:56:22.666	
End	JTE-CDS 00002000:00:0	96-178/14:49:06.933		JTE-001/09:42:13.333	
Duration	00000014:00:0	000/00:14:09.333		000/00:14:09.333	

Top Label	G1JUFTKR2E22-				
Bottom Label	realtime				
Plot Key	UVS	**Type**	SCI		
CDS Bytes	333	**Report Options**	BOTH	**Scan Platform**	Yes
CDS Source	OAP	**Spin State**	DUAL	**DMS**	No

Observation Objective

GRS phase angle 40, emission angle 2, SSI (G1JSGRSEM301).

332	323	314	(lat)	(lon)
3	2	1		-12.0
6	5	4		-22.0

Realtime observation at 10 bps for 12 RIMs; F/F full scan covers 6 equivalent SSI frames. Expect RTSFMT = B. Distance from Jupiter = 21 Rj.

Last cn/ck = TBD

Design Detail

```
PSID   CDS  RIM  COMMAND PARAMETERS
384AK   00   00  COMMNT UVS RIM 0
349KA   28   00+UVFLSH DISCRD,UVS
157AJ   38   01  CMDRS   PLAN_DUR = 13 RIMS; EST_UVS_CMDS = 2
             02       1
34UVS/UVF:07,SCAN,NORM,NORM,NORM,SAME,0,ON,OFF,OFF,ON,OFF,NOOVR,1,00,9C,00,00
             14       13
34UVS/OFF:C1,FIXED,NORM,NORM,NORM,SAME,0,OFF,OFF,ON,OFF,OFF,NOOVR,1,2C,05,00,00
165AM   36   02  TARGET Lat/lon = -22.3/318 (cn off=-7.5 mrad; xcn off=7.1 mrad)
                    (RA/Dec = 237.86/-20.08)
117AG   63   02  CSMOS   6 strips; 3 subcsmos
349KB   28   02+UVFLSH PACKET,UVS (1)
349KC   28   04+UVFLSH PACKET,UVS (2)
349KD   28   06+UVFLSH PACKET,UVS (3)
349KE   28   08+UVFLSH PACKET,UVS (4)
349KF   28   10+UVFLSH PACKET,UVS (5)
349KQ   28   12+UVFLSH PACKET,UVS (6)
```

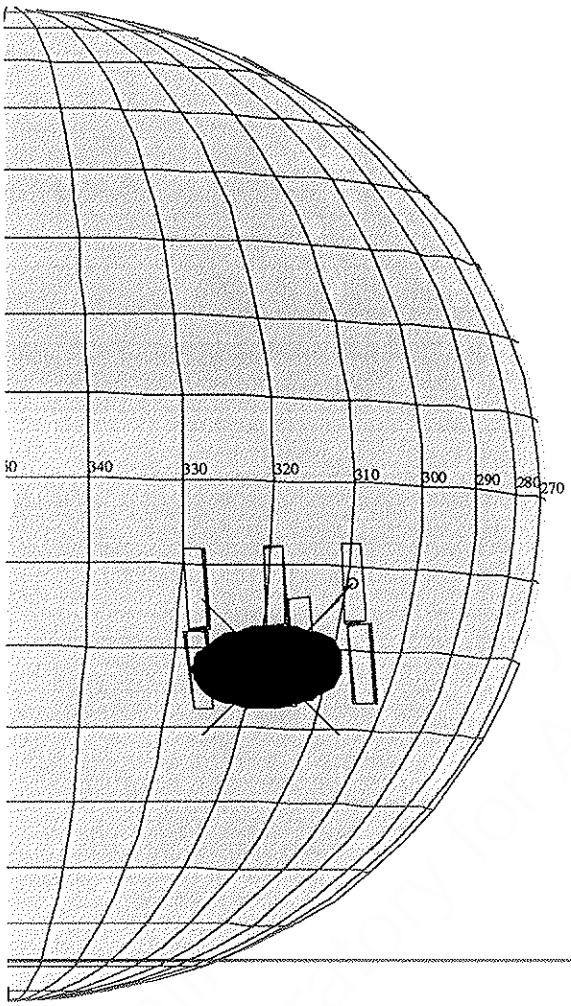

165AM:TT= 0 TMC=1 C= -7.50 XC= 7.10 BS=0/2645 TC=1(-22.3 318)
A=364 pD= 2184 SR=17.430 RA50=237.86 DEC50=-20.08 cone=138.39 clock=91.78
117AG:#SB=3 OR=0.010 RR=12.000 BM=F RC= 1 BS=0/2645
1:#s= 3 Cs= 0.00 XCs= 0.00 Cr= 6.70 XCr= 0.00 sD= 272 rD= 92
2:#s= 1 Cs= 0.00 XCs= 0.00 Cr= -13.50 XCr= -7.50 sD= 272 rD= 92
3:#s= 2 Cs= 0.00 XCs= 0.00 Cr= 6.70 XCr= 0.00 sD= 272 rD= 92

ESIGN G1.0 kent : 4/20/1996 18:35:51

ILE:P.G1JUFTKR2E22

ENTRAL BODY:JUPITER III

INI:m.G1JUFTKR2E22

` EPH:/DATA/NAVIO/T-960110-ALL.NS

ERIAPSIS:

THINNING:NONE :UVS 10

TART:JTE 96-180/00:31:20.266 -CDS 2012:00:0

BODY PLOT TIME:TARGET-TIME D= 2184 S= 1.400

Frame : 0

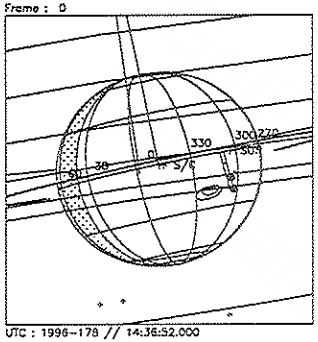

UTC : 1996-178 // 14:36:52.000
SCLK: 1/03496667:86:6:0

Frame : 1

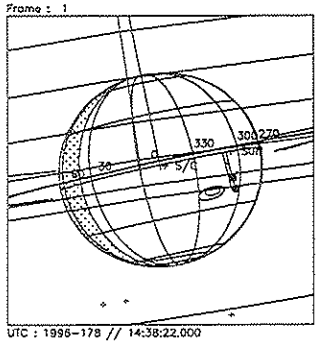

UTC : 1996-178 // 14:38:22.000
SCLK: 1/03496669:39:6:0

Frame : 2

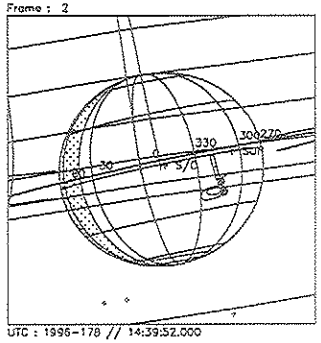

UTC : 1996-178 // 14:39:52.000
SCLK: 1/03496670:83:6:1

Feature Track 2E22

Frame : 3

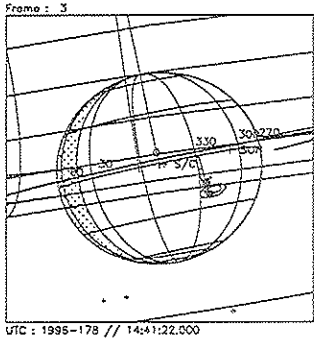

UTC : 1996-178 // 14:41:22.000
SCLK: 1/03496672:36:6:1

Frame : 4

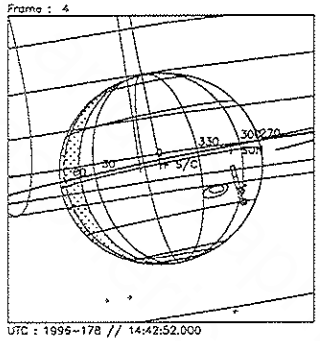

UTC : 1996-178 // 14:42:52.000
SCLK: 1/03496673:80:6:1

Frame : 5

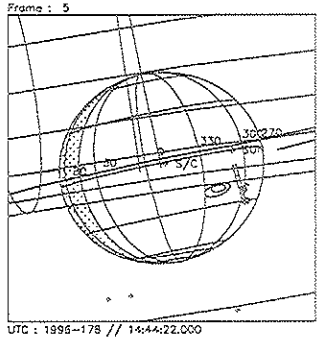

UTC : 1996-178 // 14:44:22.000
SCLK: 1/03496675:33:6:1

Frame : 6

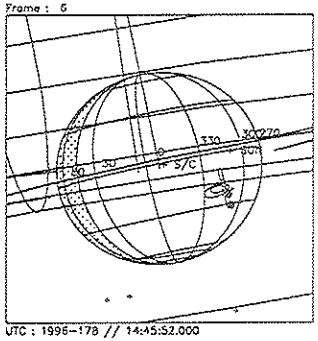

UTC : 1996-178 // 14:45:52.000
SCLK: 1/03496676:77:6:1

Frame : 7

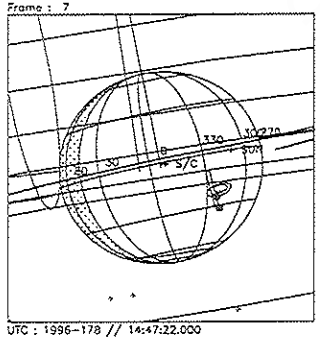

UTC : 1996-178 // 14:47:22.000
SCLK: 1/03496678:30:6:1

Frame : 8

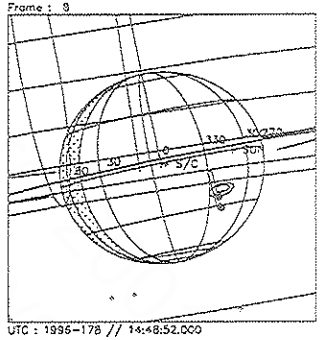

UTC : 1996-178 // 14:48:52.000
SCLK: 1/03496679:74:6:1

Start UTC_TIME : 1996-178 // 14:36:52.000
End UTC_TIME : 1996-178 // 14:49:00.000
Start SCLK : 1/03496667:86:6:0
Delta Time between FOV : 90.00000
FOVs : F Channel(0.1x0.4), N/G Channel(0.1x1.0)

Target Body : JUPITER
Target Cone/Clock : 140.08/ 92.56 Deg
S/C to Body Center : 1518021. Km (21.233436 Rj)
Z-axis Pointing (Ra / Dec) : 102.80 / 25.00 Deg

Activity ID:	Orbit G1	OAPEL JUFTKR2E		**SeqNo**	23-
Title	GRS feature track			**Instrument**	UVS
Requestor	UVS-AWG/W. KENT TOBISKA	**Team**	UVS	**Working Group**	AWG

Time System	CDS	**Load ID**	G1A	**Calendar Date**	06/26/96 Week 26

Start	JTE-CDS 00002000:00:0	96-178/14:49:06.933	JTE-001/09:42:13.333
End	JTE-CDS 00001980:00:0	96-178/15:09:20.266	JTE-001/09:22:00.000
Duration	00000020:00:0	000/00:20:13.333	000/00:20:13.333

Top Label	G1JUFTKR2E23-				
Bottom Label	realtime				
Plot Key	UVS	**Type**	SCI		
CDS Bytes	223	**Report Options**	BOTH	**Scan Platform**	Yes
CDS Source	OAP	**Spin State**	DUAL	**DMS**	No

Observation Objective

GRS phase angle 40, emission angle 2, SSI (G1JSGRSEM301).

Realtime observation at 10 bps for 20 RIMs; F/G full scan covers 6 equivalent SSI frames (3x2). Expect RTSFMT = B. Distance from Jupiter = 21 Rj.

Last cn/ck = TBD

Design Detail

```
PSID   CDS  RIM  COMMAND  PARAMETERS
384AL   00   00  COMMNT UVS RIM 0
349KG   28   00+UVFLSH DISCRD,UVS
157AK   38   01 CMDRS   PLAN_DUR = 19 RIMS; EST_UVS_CMDS = 2
            02      1
34UVS/UVF:07,SCAN,NORM,NORM,NORM,SAME,0,ON,OFF,ON,ON,OFF,NOOVR,1,00,9C,01,2C
            20      19
34UVS/OFF:C1,FIXED,NORM,NORM,NORM,SAME,0,OFF,OFF,ON,OFF,OFF,NOOVR,1,2C,05,00,00
165AN   36   02 TARGET Lat/lon = -22.3/318 (cn off = -6.0) (RA/Dec = 237.81/-20.54)
117AH   37   02 CSMOS   1 strips
349KH   28   06+UVFLSH PACKET,UVS (1,4)
349KI   28   12+UVFLSH PACKET,UVS (2,5)
349KJ   28   18+UVFLSH PACKET,UVS (3,6)
```

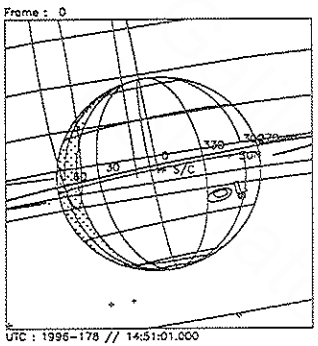

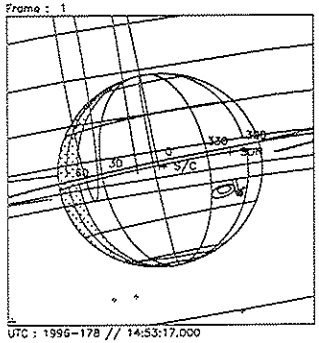

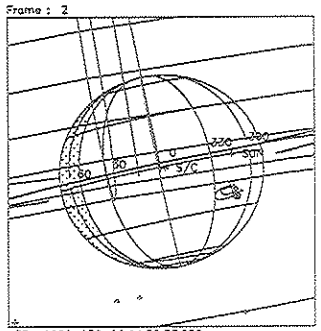

Feature Track 2E22

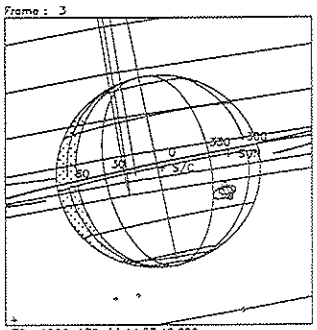

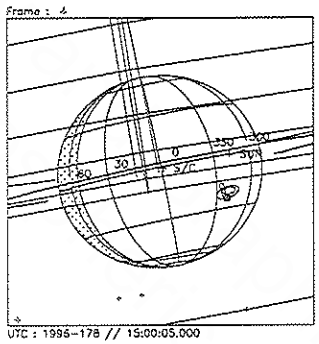

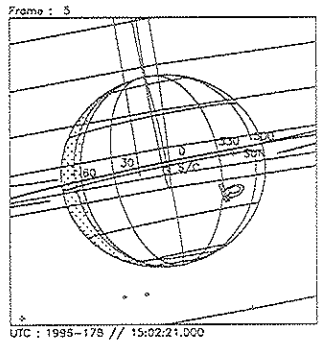

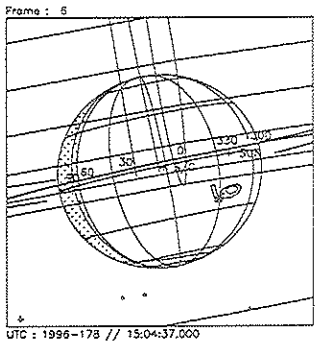

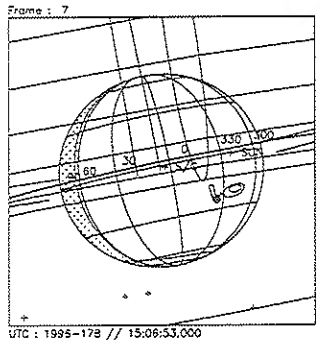

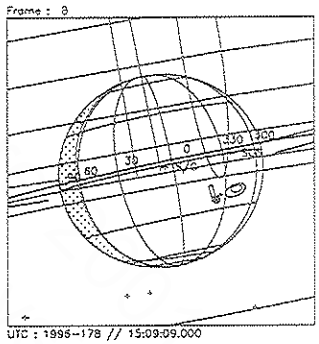

Start UTC_TIME : 1996-178 // 14:51:01.000
End UTC_TIME : 1996-178 // 15:09:13.000
Start SCLK : 1/03496681:86:1:1
Delta Time between FOV : 136.0000
FOVs : F Channel(0.1x0.4)

Target Body : JUPITER
Target Cone/Clock : 140.39/ 92.54 Deg
S/C to Body Center : 151109:. Km (21.136626 Rj)
Z-axis Pointing (Ra / Dec) : 102.80 / 25.00 Deg

Activity ID: Orbit G1 **OAPEL** JUFTKR2E **SeqNo** 32-

Title GRS feature track **Instrument** UVS

Requestor UVS-AWG/W. KENT TOBISKA **Team** UVS **Working Group** AWG

Time System CDS **Load ID** G1A **Calendar Date** 06/26/96 **Week** 26

Start	JTE-CDS 00001962:00:0	96-178/15:27:32.266	JTE-001/09:03:48.000
End	JTE-CDS 00001952:00:0	96-178/15:37:38.933	JTE-001/08:53:41.333
Duration	00000010:00:0	000/00:10:06.667	000/00:10:06.667

Top Label G1JUFTKR2E32-

Bottom Label realtime

Plot Key	UVS	**Type**	SCI		
CDS Bytes	277	**Report Options**	BOTH	**Scan Platform**	Yes
CDS Source	OAP	**Spin State**	DUAL	**DMS**	No

Observation Objective

GRS phase angle 40, emission angle 3, SSI (G1JSGRSEM401).

340	324	(lat)	(lon)
2	1		-12.0
4	3		-22.8

Realtime observation at 10 bps for 6 RIMs; F/F full scan covers 4 equivalent SSI frames. Expect RTSFMT = B. Distance from Jupiter = 21 Rj.

Last cn/ck = TBD

Design Detail

```
PSID   CDS  RIM COMMAND PARAMETERS
384AN   00   00 COMMNT UVS RIM 0
349KK   28   00+UVFLSH DISCRD,UVS
157AL   38   01 CMDRS   PLAN_DUR = 9 RIMS; EST_UVS_CMDS = 2
             02       1
34UVS/UVF:07,SCAN,NORM,NORM,NORM,SAME,0,ON,OFF,OFF,ON,OFF,NOOVR,1,00,9C,00,00
             10       9
34UVS/OFF:C1,FIXED,NORM,NORM,NORM,SAME,0,OFF,OFF,ON,OFF,OFF,NOOVR,1,2C,05,00,00
165AO   36   02 TARGET Lat/lon = -22.3/318 (cn off=-1.0; xcn off=7.2)
                       (RA/Dec = 238.38/-20.36)
117AI   63   02 CSMOS   4 strips; 3 subcsmos
349KL   28   02+UVFLSH PACKET,UVS (1)
349KM   28   04+UVFLSH PACKET,UVS (2)
349KR   28   06+UVFLSH PACKET,UVS (3)
349KS   28   08+UVFLSH PACKET,UVS (4)
```

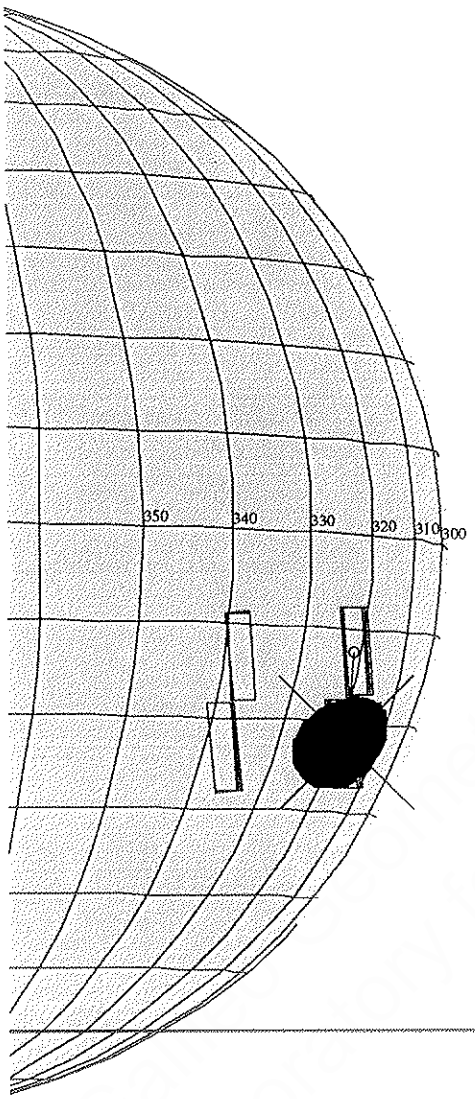

165AO:TT= 0 TMC= 1 C= -1.00 XC= 7.20 BS= 0/2109 TC= 1(-22.3 318)
A= 364 pD= 364 SR=17.430 RA50=238.38 DEC50=-20.36 cone=138.93 clock= 91.57
117AI:#SB= 3 OR= 0.010 RR=12.000 BM=F RC= 1 BS= 0/2109
1:#s= 2 Cs= 0.00 XCs= 0.00 Cr= 9.00 XCr= 0.00 sD= 272 rD= 92
2:#s= 1 Cs= 0.00 XCs= 0.00 Cr= -7.00 XCr= -7.40 sD= 272 rD= 92
3:#s= 1 Cs= 0.00 XCs= 0.00 Cr= 9.00 XCr= 0.00 sD= 272 rD= 92

ESIGN G1.0 kent : 4/20/1996 18:21:43

ILE:P.G1JUFTKR2E32

ENTRAL BODY:JUPITER III

INI:m.G1JUFTKR2E32

` EPH:/DATA/NAVIO/T-960110-ALL.NS

ERIAPSIS: THINNING:NONE :UVS 10

TART:JTE 96-180/00:31:20.266 -CDS 1960:00:0 BODY PLOT TIME:TARGET-TIME D= 364 S= 1.600

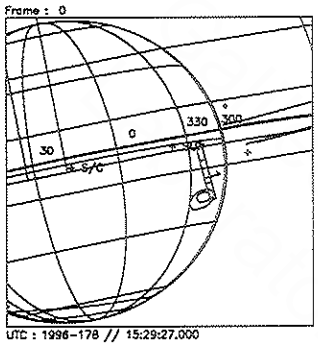

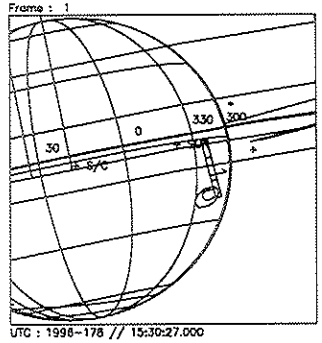

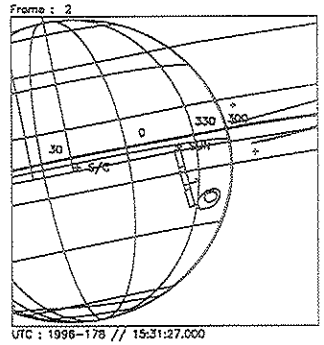

Feature Track 2E32

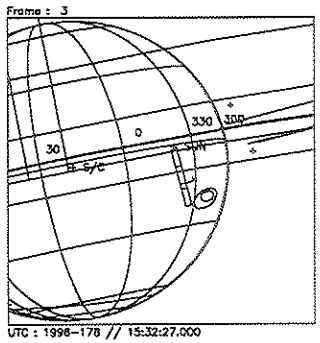

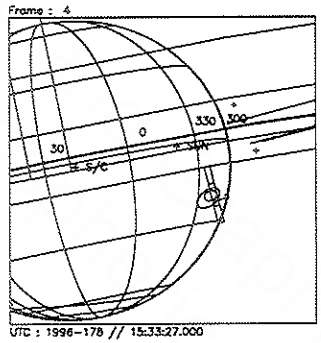

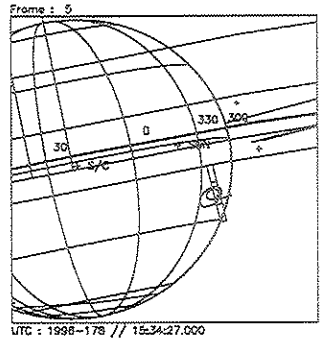

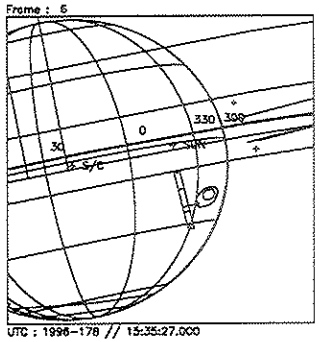

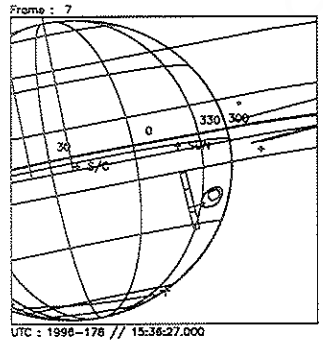

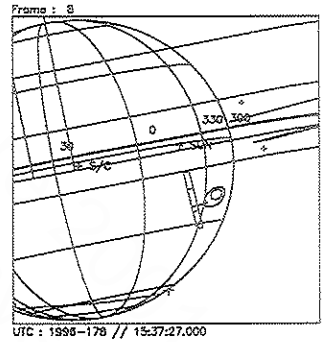

Start UTC_TIME : 1996-178 // 15:29:27.000
End UTC_TIME : 1996-178 // 15:37:32.000
Start SCLK : 1/03496719:87:1:1
Delta Time between FOV : 60.00000
FOVs : F Channel(0.1x0.4), N/G Channel(0.1x1.0)

Target Body : JUPITER
Target Cone/Clock : 141.22/ 92.51 Deg
S/C to Body Center : 1492313. Km (20.873849 Rj)
Z-axis Pointing (Ra / Dec) : 102.80 / 25.00 Deg

Activity ID:	Orbit G1	OAPEL JUFTKR2E	SeqNo 33-
Title	GRS feature track		**Instrument** UVS
Requestor	UVS-AWG/W. KENT TOBISKA	**Team** UVS	**Working Group** AWG

Time System	CDS	**Load ID**	G1A	**Calendar Date** 06/26/96	**Week** 26
Start	JTE-CDS 00001952:00:0	96-178/15:37:38.933		JTE-001/08:53:41.333	
End	JTE-CDS 00001944:00:0	96-178/15:45:44.266		JTE-001/08:45:36.000	
Duration	00000008:00:0	000/00:08:05.333		000/00:08:05.333	

Top Label	G1JUFTKR2E33-				
Bottom Label	realtime				
Plot Key	UVS	**Type**	SCI		
CDS Bytes	130	**Report Options**	BOTH	**Scan Platform**	Yes
CDS Source	OAP	**Spin State**	DUAL	**DMS**	No

Observation Objective

GRS phase angle 40, emission angle 3, SSI (G1JSGRSEM401).

Realtime observation at 10 bps for 8 RIMs; F/G full scan covers 4 equivalent SSI frames (2x2). Expect RTSFMT = B. Distance from Jupiter = 21 Rj.

Last cn/ck = TBD

Design Detail

```
PSID  CDS RIM COMMAND PARAMETERS
384AO  00   00 COMMNT UVS RIM 0
349KN  28   00+UVFLSH DISCRD,UVS
157AM  38   01 CMDRS   PLAN_DUR = 7 RIMS; EST_UVS_CMDS = 2
           02       1
34UVS/UVF:07,SCAN,NORM,NORM,NORM,SAME,0,ON,OFF,ON,ON,OFF,NOOVR,1,00,9C,01,2C
           08       7
34UVS/OFF:C1,FIXED,NORM,NORM,NORM,SAME,0,OFF,OFF,ON,OFF,OFF,NOOVR,1,2C,05,00,00
165AP  36   02 TARGET Lat/lon = -22.3/318 (cn off=1.0) (RA/Dec = 238.49/-20.84)
349KO  28   06+UVFLSH PACKET,UVS (1,2,3,4)
```

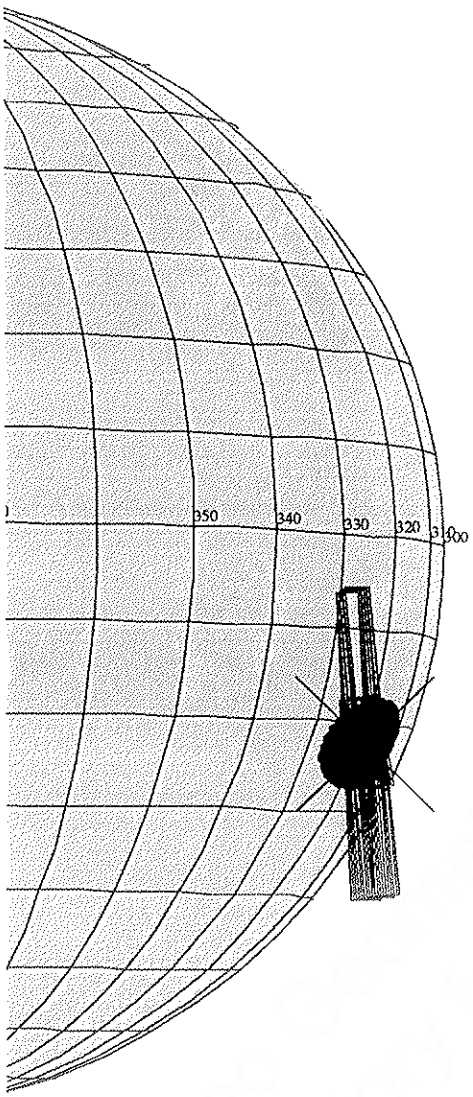

165AP:TT= 0 TMC= 1 C= 1.00 XC= 0.00 BS= 0/3929 TC= 1(-22.3 318)
A= 182 pD= 364 SR=17.430 RA50=238.49 DEC50=-20.84 cone=139.15 clock= 90.90

ESIGN G1.0 kent : 4/20/1996 18:29: 2

ILE:P.G1JUFTKR2E33

ENTRAL BODY:JUPITER III

INI:m.G1JUFTKR2E33

`: EPH:/DATA/NAVIO/T-960110-ALL.NS

ERIAPSIS: THINNING:NONE :UVS 1

TART:JTE 96-180/00:31:20.266 -CDS 1950:00:0 BODY PLOT TIME:TARGET-TIME D= 364 S= 1.600

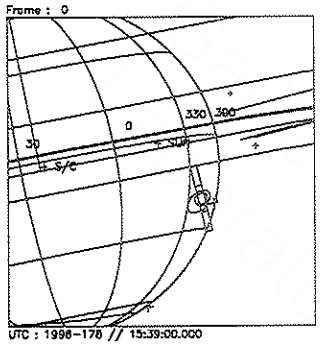

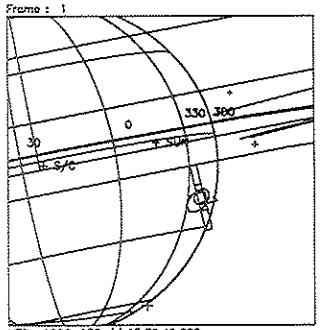

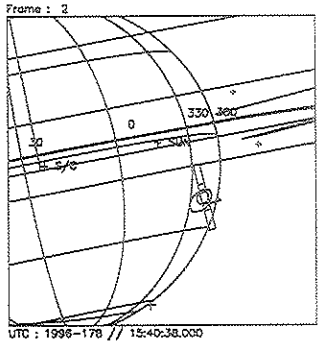

Feature Track 2E33

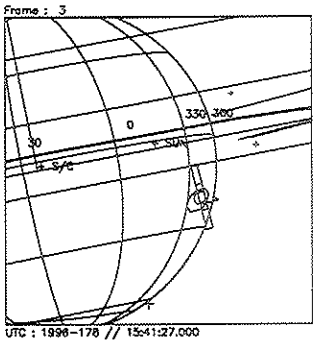

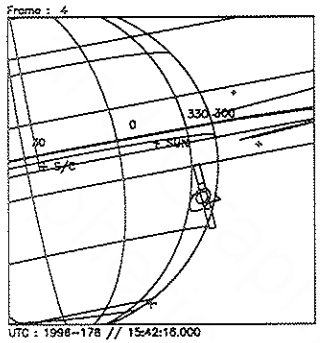

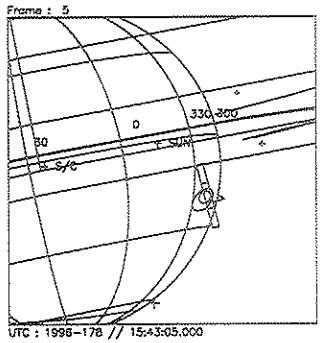

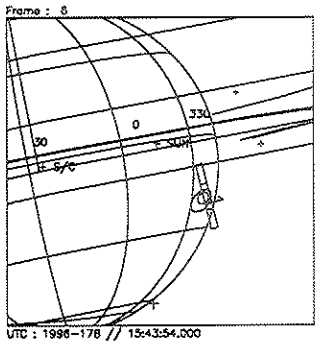

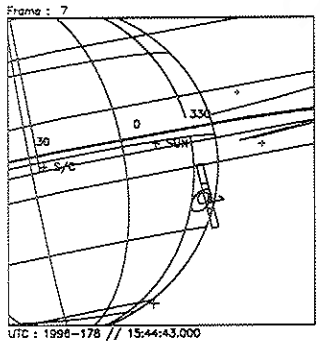

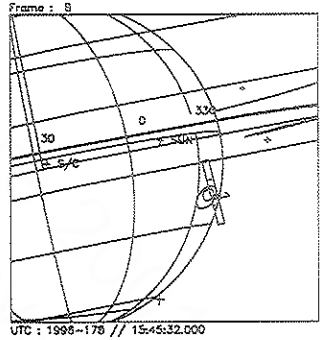

Start UTC_TIME : 1996-178 // 15:39:00.000
End UTC_TIME : 1996-178 // 15:45:37.000
Start SCLK : 1/03496729:36:6:1
Delta Time between FOV : 49.00000
FOVs : F Channel(0.1x0.4), N/G Channel(0.1x1.0)

Target Body : JUPITER
Target Cone/Clock : 141.43/ 92.50 Deg
S/C to Body Center : 1487648. Km (20.808599 Rj)
Z-axis Pointing (Ra / Dec) : 102.80 / 25.00 Deg

Activity ID: Orbit G1 OAPEL NUGRATNG SeqNo 02-

Title REQUIRED UVS GRATING MOVEMENT 2 Instrument UVS

Requestor UVS-MWG/S.STEPHENS 37737 Team UVS Working Group MWG

Time System CDS Load ID G1B Calendar Date 07/10/96 Week 28

Start	JEE+CDS 00017713:00:0	96-192/11:01:08.932	JEE+012/10:29:48.666
End	JEE+CDS 00017775:00:0	96-192/12:03:50.266	JEE+012/11:32:30.000
Duration	00000062:00:0	000/01:02:41.334	000/01:02:41.334

Top Label G1NUGRATNG02-

Bottom Label (UVS Grating Movement)

Plot Key	UVS	Type	SCI		
CDS Bytes	38	Report Options	BOTH	Scan Platform	No
CDS Source	PA	Spin State	DUAL	DMS	No

Observation Objective

REQUIRED UVS GRATING MOVEMENT 2
To comply with Flight Rule 34A05 (UVS Power On) in the G1 Cruise sequences, the UVS grating must be moved at least every two weeks. The UVS Team prefers that we exercise the UVS grating every week, so we are implementing this 4 times in G1B, and only once in G1C (to save CDS Bytes).
The FULLSCAN G instrument command will exercise the grating, with HVOFF.

Design Detail

Last modified 05/04/96

PSID	RIM:mf	CDS PA	
384BB	0	0	COMMENT [UVS RIM 0]
157BB	1	38	CMDRS (10+14*2) [PLAN DUR 61, EST UVS CMDS 2]
	2		34UVS,07,S,N,N,N,S,0,OFF,OFF,ON,OFF,OFF,NO,1,2C,9D,00,00 [FULLSCAN G]
	62		34UVS,C1,F,N,N,N,S,0,OFF,OFF,ON,OFF,OFF,NO,1,2C,05,00,00 [NORMAL HVOFF]

Did not occur due to S/C Safing