Activity ID:	**Orbit** G2	**OAPEL** JUFIXLON		**SeqNo** 01-	
Title	Fixed longitude map			**Instrument**	UVS
Requestor	W. KENT TOBISKA	**Team** UVS		**Working Group**	AWG

Time System	CDS	**Load ID**		**Calendar Date** 09/02/96	Week 36
Start	JEE-CDS 00006791:00:0	96-246/19:10:58.600	JEE-004/18:26:27.333		
End	JEE-CDS 00006487:00:0	96-247/00:18:21.267	JEE-004/13:19:04.666		
Duration	00000304:00:0	000/05:07:22.667	000/05:07:22.667		

Top Label	G2JUFIXLON01-				
Bottom Label	realtime				
Plot Key	UVS	**Type**	SCI		
CDS Bytes	346	**Report Options**	BOTH	**Scan Platform**	Yes
CDS Source	OAP	**Spin State**	DUAL	**DMS**	No

Observation Objective

Fixed longitude map of equatorial H Ly-a bulge (68-95). Ten 1/2 hour segments starting off the darkside then continuing along the equator onto brightside. Observation is interrupted near the end (no time lost during UVS off) while SSI does an Io plume monitor observation.

Realtime observation at 10 bps for 5.0 hours; G/G Ly-a 88 step 2 posn miniscan. 10 RIMs UVS OFF/FIXED every 30 RIMs for PWS. Expect RTSFMT=D. Playback ~2 RIMs of recorded data (four 1/2 RIM sets) on tape from PWS observation. Distance from Jupiter = 47 Rj.

Last cn/ck = 153/300.

[NOTE: 2.018 recorded RIMs = 0.061690 MBTG with a 2:1 compression and no AACS.]

Design Detail

PSID	CDS	RIM	COMMAND PARAMETERS
384AA	00	00	COMMNT UVS RIM 0
61AA	37	02	+LOOPER DUR = 30 RIMS; REPEAT = 10
432AA	38	03	+OPTRTM UVS_STATUS = INCLUDE; BS = 45
349AA	28	03	+UVFLSH DISCRD,UVS
157AA	38	03	CMDRS PLAN_DUR = 20 RIMS; EST_UVS_CMDS = 2
		04	1 34UVS/UVG:DF,FIXED,NORM,NORM,NORM,SAME,0,OFF,OFF,ON,ON,OFF,NOOVR,1,2C,7D,00,2C
		24	21 34UVS/OFF:C1,FIXED,NORM,NORM,NORM,SAME,0,OFF,OFF,ON,OFF,OFF,NOOVR,1,2C,05,00,00
165AA	36	04	TARGET Body center cn_off = 25.0; xcn_off = 0.25 (no TMC) (RA/Dec = 202.32/-6.83)
305AE	00	18	+SELECT INSTR=UVS2, COMPR=RICE, CMPR_DVSR=2.0, CMPR_UNC=0.0
116AA	29	33	CMDSP Lat/lon = 0/90 (no TMC) (RA/Dec = TBD)
300AE	00	58	+DESELC INSTR=UVS2
117AA	37	64	CSMOS PLAN_DUR = 174 RIMS (44 repositionings)
305AF	00	78	+SELECT INSTR=UVS2, COMPR=RICE, CMPR_DVSR=2.0, CMPR_UNC=0.0
300AF	00	238	+DESELC INSTR=UVS2
165AZ	36	244	TARGET Lat/lon = 0/87.5 (no TMC) (RA/Dec = 201.02/-6.24)
			[reposition from SSI/Io observation]
116AB	29	273	CMDSP Lat/lon = 0/90 (no TMC) (RA/Dec = TBD)
432AB	38	304	+OPTRTM UVS_STATUS = EXCLUDE; BS = 45

Frame : 0

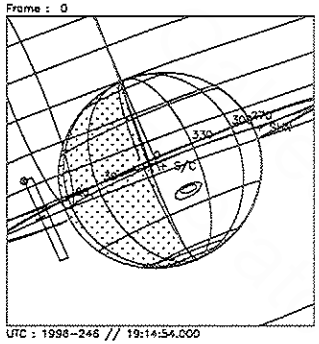

UTC : 1996-246 // 19:14:54.000
SCLK: 1/03593786:88:2:4

Frame : 1

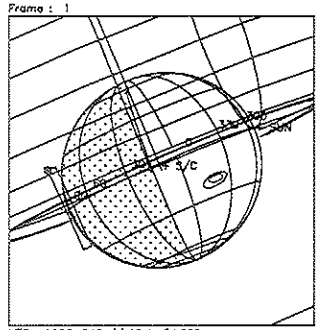

UTC : 1996-246 // 19:44:54.000
SCLK: 1/03593816:58:2:4

Frame : 2

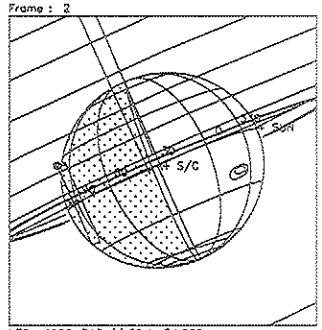

UTC : 1996-246 // 20:14:54.000
SCLK: 1/03593846:28:2:4

Frame : 3

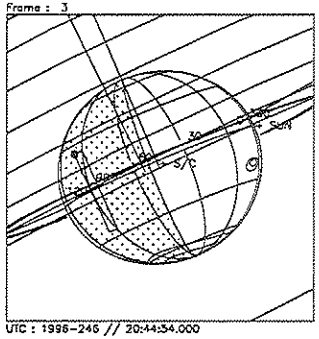

UTC : 1996-246 // 20:44:54.000
SCLK: 1/03593875:97:2:4

Frame : 4

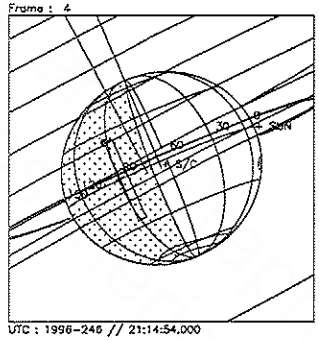

UTC : 1996-246 // 21:14:54.000
SCLK: 1/03593905:57:2:5

Frame : 5

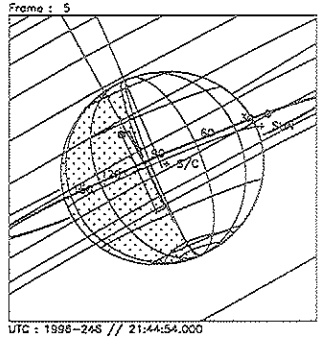

UTC : 1996-246 // 21:44:54.000
SCLK: 1/03593935:27:2:5

Frame : 6

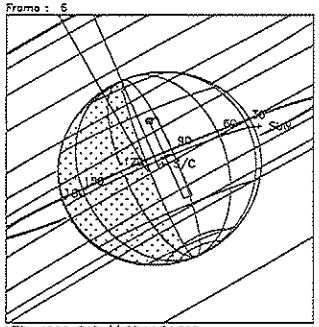

UTC : 1996-246 // 22:14:54.000
SCLK: 1/03593964:88:2:5

Frame : 7

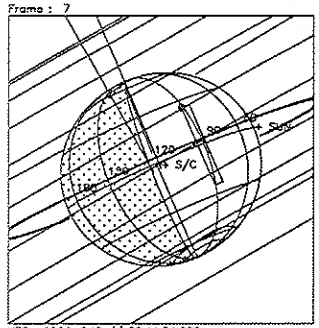

UTC : 1996-246 // 22:44:54.000
SCLK: 1/03593994:58:2:5

Frame : 8

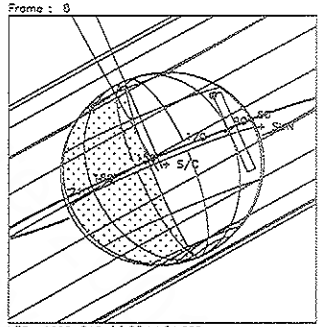

UTC : 1996-246 // 23:14:54.000
SCLK: 1/03594024:28:2:5

Start UTC_TIME : 1996-246 // 19:14:54.000
End UTC_TIME : 1996-247 // 00:08:08.000
Start SCLK : 1/03593786:86:2:4
Delta Time between FOV : 1800.000
FOVs : N/G Channel(0.1x1.0)

Target Body : JUPITER
Target Cone/Clock : 103.87/ 91.28 Deg
S/C to Body Center : 3468018. Km (48.509174 Rj)
Z-axis Pointing (Ra / Dec) : 98.60 / 25.00 Deg

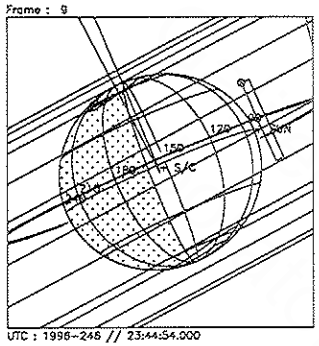

UTC : 1996-246 // 23:44:54.000
SCLK: 1/03594053:89:2:5

Image Geometry and Graphics Software
Copyright © 2001 Pearson Education, Inc.

Start UTC_TIME : 1996-246 // 19:14:54.000
End UTC_TIME : 1996-247 // 00:08:08.000
Start SCLK : 1/03593786:86:2:4
Delta Time between FOV : 1800.000
FOVs : N/G Channel(0.1x1.0)

Target Body : JUPITER
Target Cone/Clock : 104.93/ 91.27 Deg
S/C to Body Center : 3374906. Km (47.206763 Rj)
Z-axis Pointing (Ra / Dec) : 98.60 / 25.00 Deg

Activity ID: Orbit G2 **OAPEL** JUFIXTMD **SeqNo** 01-

Title Fixed local time map **Instrument** UVS

Requestor W. KENT TOBISKA **Team** UVS **Working Group** AWG

Time System CDS **Load ID** **Calendar Date** 09/03/96 **Week** 36

Start	JEE-CDS 00006090:00:0	96-247/06:59:45.933	JEE-004/06:37:40.000
End	JEE-CDS 00005486:00:0	96-247/17:10:28.600	JEE-003/20:26:57.333
Duration	00000604:00:0	000/10:10:42.667	000/10:10:42.667

Top Label G2JUFIXTMD01-

Bottom Label realtime

Plot Key UVS **Type** SCI

CDS Bytes 251 **Report Options** BOTH **Scan Platform** Yes

CDS Source OAP **Spin State** DUAL **DMS** No

Observation Objective

Fixed local time map for global coverage over 1 Jupiter rotation on darkside southern aurora.

Realtime observation at 10 bps for 10.0 hours; G/G full scan. 10 RIMs UVS OFF/FIXED every 30 RIMs for PWS. Expect RTSFMT=D. Distance from Jupiter = 44 Rj.

Last cn/ck = 153/300.

[NOTE: typo in TARGET SLEW XCN_OFF (+21.5 instead of -21.5) made the observation of the northern darkside aurora.]

Design Detail

```
PSID   CDS RIM COMMAND PARAMETERS
384AB  00  00 COMMNT UVS RIM 0
 61AB  37  02+LOOPER DUK = 30 RIMS; REPEAT = 20
432AC  38  03+OPTRTM UVS_STATUS = INCLUDE; BS = 45
349AB  28  03+UVFLSH DISCRD,UVS
157AB  38  03 CMDRS  PLAN_DUR = 21 RIMS; EST_UVS_CMDS = 2
           04       1 34UVS/UVG:07,SCAN,NORM,NORM,NORM,SAME,0,OFF,OFF,ON,ON,OFF,NOOVR,1,2C,9D,00,00
           24      21 34UVS/OFF:C1,FIXED,NORM,NORM,NORM,SAME,0,OFF,OFF,ON,OFF,OFF,NOOVR,1,2C,05,00,00
165AB  72  04 TARGET Body center cn_off=6.5; xcn_off=-21.5 (use TMC)(RA/Dec = 203.66/-8.71)
            [NOTE: incorrect xcn_off=21.5 was in the sequence, s/p commanded to
             northern darkside aurora at RA/Dec = 204.53/-6.54]
432AD  38 604+OPTRTM UVS_STATUS = EXCLUDE; BS = 45
```

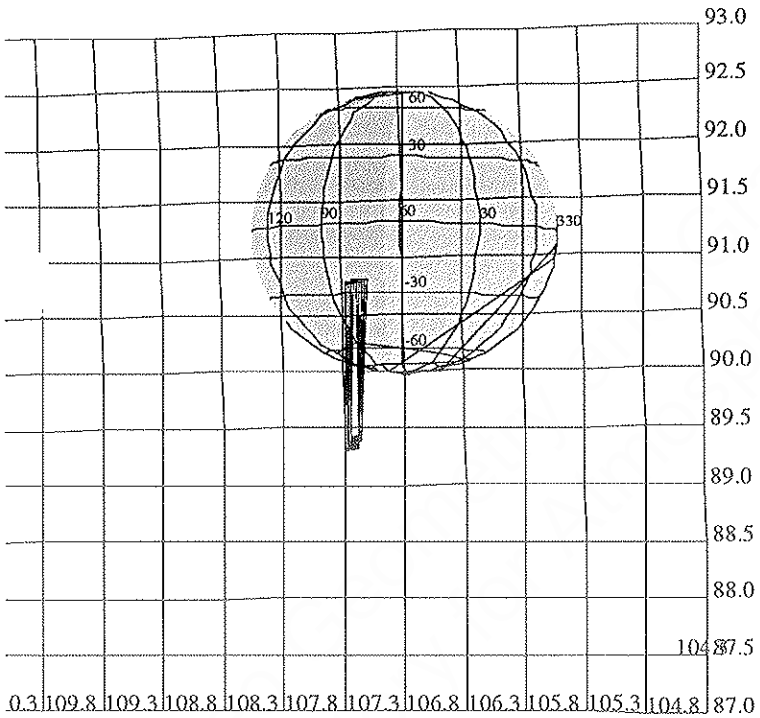

165AB:TT= 0 TMC= 1 C= 8.00 XC= -19.50 BS= 0/5874 TC= 9
A= 728 pD=103740 SR=17.430 RA50=203.65 DEC50= -8.72 cone=107.26 clock= 90.06

ESIGN G1.0 kent : 7/14/1996 13:33:36

ILE:P.G2JUFIXTMD01

ENTRAL BODY:JUPITER III

INI:m.G2JUFIXTMD01

'PH:/DATA/NAVIO/T-960628-TOUR.NS

APSIS: THINNING:NONE :UVS 1

TART:JEE 96-251/13:37:25.933 -CDS 6086:00:0 BODY PLOT TIME:TARGET-TIME D=***** S= 0.400

Frame : 0

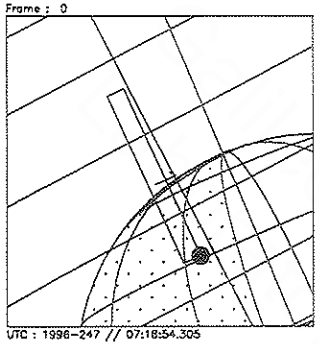

UTC : 1996-247 // 07:18:54.305
SCLK: 1/03594503:00:0:0

Frame : 1

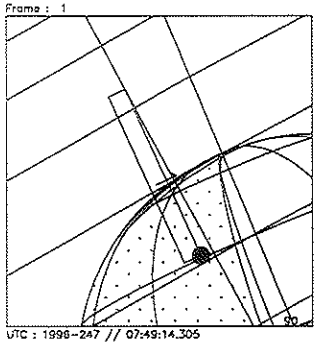

UTC : 1996-247 // 07:49:14.305
SCLK: 1/03594533:00:0:0

Frame : 2

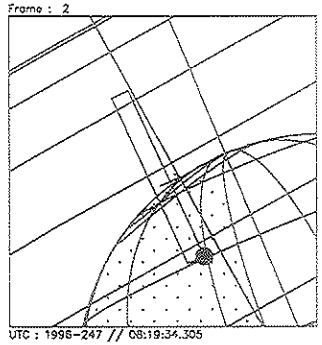

UTC : 1996-247 // 08:19:34.305
SCLK: 1/03594563:00:0:0

Frame : 3

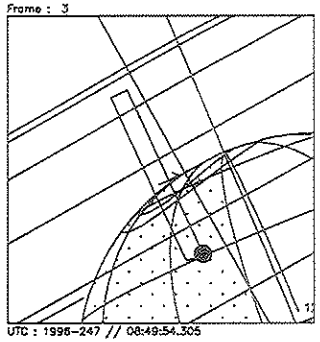

UTC : 1996-247 // 08:49:54.305
SCLK: 1/03594593:00:0:0

Frame : 4

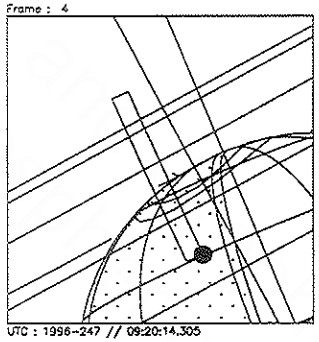

UTC : 1996-247 // 09:20:14.305
SCLK: 1/03594623:00:0:1

Frame : 5

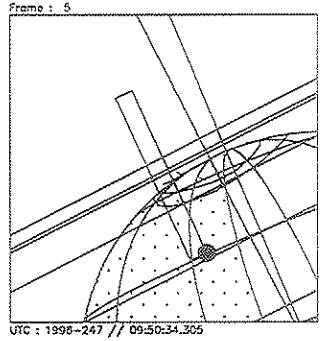

UTC : 1996-247 // 09:50:34.305
SCLK: 1/03594653:00:0:1

Frame : 6

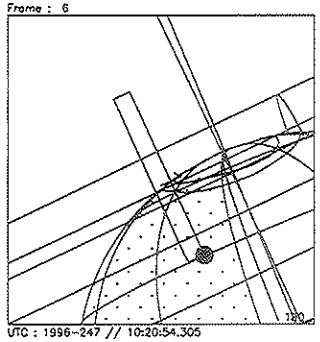

UTC : 1996-247 // 10:20:54.305
SCLK: 1/03594683:00:0:1

Frame : 7

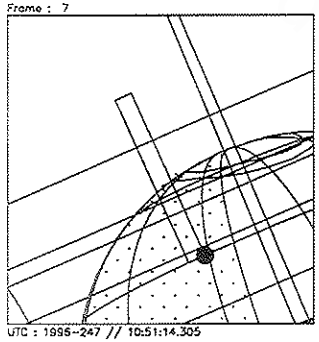

UTC : 1996-247 // 10:51:14.305
SCLK: 1/03594713:00:0:1

Frame : 8

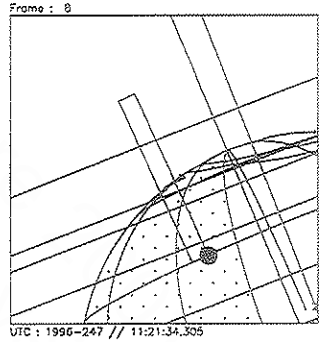

UTC : 1996-247 // 11:21:34.305
SCLK: 1/03594743:00:0:1

Start UTC_TIME : 1996-247 // 07:18:54.305
End UTC_TIME : 1996-247 // 16:54:13.617
Start SCLK : 1/03594503:00:0:0
Delta Time between FOV : 1820.000
FOVs : F Channel(0.1x0.4), N/G Channel(0.5x0.5)

Target Body : JUPITER
Target Cone/Clock : 106.87/ 91.23 Deg
S/C to Body Center : 3214505. Km (44.963138 Rj)
Z-axis Pointing (Ra / Dec) : 98.60 / 25.00 Deg

Frame : 9

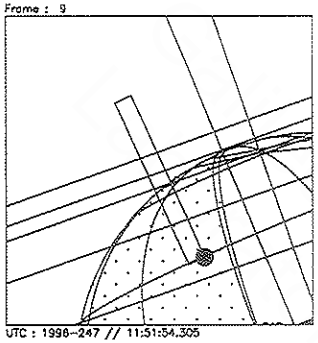

UTC : 1996-247 // 11:51:54.305
SCLK: 1/03594773:00:0:1

Frame : 10

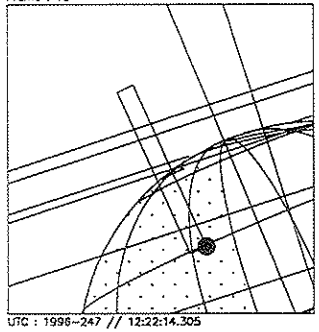

UTC : 1996-247 // 12:22:14.305
SCLK: 1/03594803:00:0:1

Frame : 11

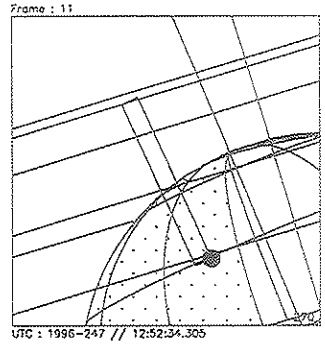

UTC : 1996-247 // 12:52:34.305
SCLK: 1/03594833:00:0:1

Frame : 12

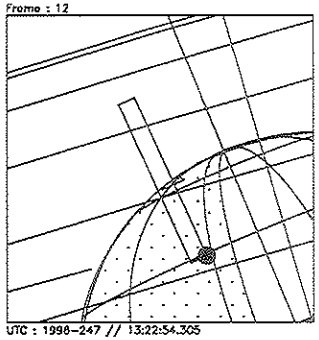

UTC : 1996-247 // 13:22:54.305
SCLK: 1/03594863:00:0:2

Frame : 13

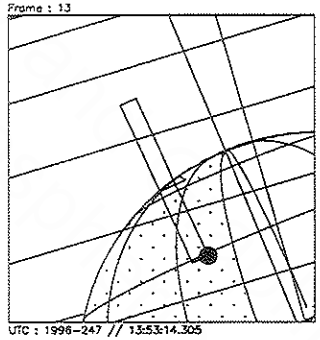

UTC : 1996-247 // 13:53:14.305
SCLK: 1/03594893:00:0:2

Frame : 14

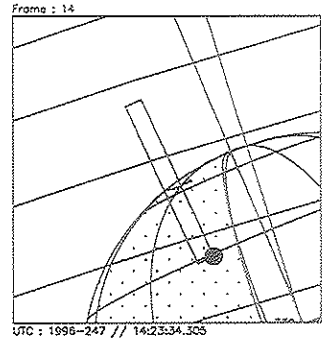

UTC : 1996-247 // 14:23:34.305
SCLK: 1/03594923:00:0:2

Frame : 15

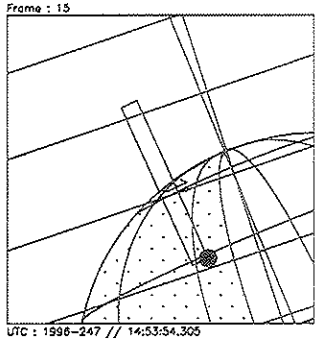

UTC : 1996-247 // 14:53:54.305
SCLK: 1/03594953:00:0:2

Frame : 16

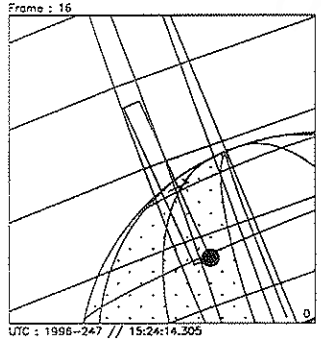

UTC : 1996-247 // 15:24:14.305
SCLK: 1/03594983:00:0:2

Frame : 17

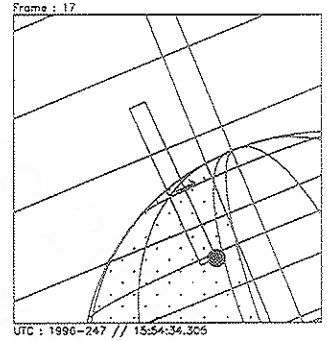

UTC : 1996-247 // 15:54:34.305
SCLK: 1/03595013:00:0:2

Start UTC_TIME : 1996-247 // 07:18:54.305
End UTC_TIME : 1996-247 // 16:54:13.617
Start SCLK : 1/03594503:00:0:0
Delta Time between FOV : 1820.000
FOVs : F Channel(0.1x0.4), N/G Channel(0.5x0.5)

Target Body : JUPITER
Target Cone/Clock : 108.14/ 91.21 Deg
S/C to Body Center : 3115636. Km (43.580206 Rj)
Z-axis Pointing (Ra / Dec) : 98.60 / 25.00 Deg

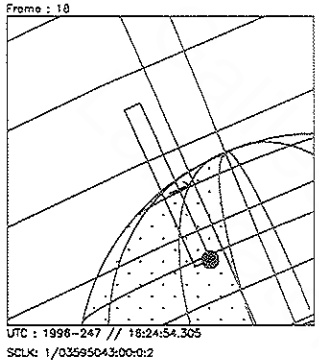

Start UTC_TIME : 1996-247 // 07:18:54.305
End UTC_TIME : 1996-247 // 16:54:13.617
Start SCLK : 1/03594503:00:0:0
Delta Time between FOV : 1820.000
FOVs : F Channel(0.1x0.4), N/G Channel(0.5x0.5)

Target Body : JUPITER
Target Cone/Clock : 109.48/ 91.18 Deg
S/C to Body Center : 3014875. Km (42.170796 Rj)
Z-axis Pointing (Ra / Dec) : 98.60 / 25.00 Deg

Activity ID:	Orbit G2	**OAPEL**	JUDRKMAP	**SeqNo**	01-
Title	Darkside map			**Instrument**	UVS
Requestor	W. KENT TOBISKA	**Team**	UVS	**Working Group**	AWG

Time System	CDS	**Load ID**		**Calendar Date**	09/03/96 Week 36
Start	JEE-CDS 00005188:00:0	96-247/22:11:47.267		JEE-003/15:25:38.666	
End	JEE-CDS 00005094:00:0	96-247/23:46:49.933		JEE-003/13:50:36.000	
Duration	00000094:00:0	000/01:35:02.666		000/01:35:02.666	

Top Label	G2JUDRKMAP01-				
Bottom Label	realtime				
Plot Key	UVS	**Type**	SCI		
CDS Bytes	249	**Report Options**	BOTH	**Scan Platform**	Yes
CDS Source	OAP	**Spin State**	DUAL	**DMS**	No

Observation Objective

Global mapping of equatorial darkside H Ly-a (274-308) and off planet to get Ly-a sky background.

Realtime observation at 10 bps for 1.5 hours; G/G Ly-a 88 step 2 posn miniscan. 5 RIMs UVS OFF/FIXED every 30 RIMs for PWS. Expect RTSFMT=D. Distance from Jupiter = 40 Rj.

Last cn/ck = 153/300.

Design Detail

```
PSID    CDS  RIM  COMMAND  PARAMETERS
384AC   00   00   COMMNT  UVS RIM 0
 61AC   37   02+LOOPER  DUR = 30 RIMS; REPEAT = 3
432AE   38   03+OPTRTM  UVS_STATUS = INCLUDE; BS = 45
349AC   28   03+UVFLSH  DISCRD,UVS
157AC   38   03  CMDRS    PLAN_DUR = 26 RIMS; EST_UVS_CMDS = 2
             04        1  34UVS/UVG:DF,FIXED,NORM,NORM,NORM,SAME,0,OFF,OFF,ON,ON,OFF,NOOVR,1,2C,7D,00,2C
             29       26  34UVS/OFF:C1,FIXED,NORM,NORM,NORM,SAME,0,OFF,OFF,ON,OFF,OFF,NOOVR,1,2C,05,00,00
165AC   36   04  TARGET  Lat/lon = 0/274  (no TMC)  (RA/Dec = 208.56/-9.58)
165AD   36   34  TARGET  Lat/lon = 0/300  (no TMC)  (RA/Dec = 208.88/-9.72)
165AE   36   64  TARGET  CN/CK = 116.12/91.52  (TORUS BACKGROUND)  (RA/Dec = 212.46/-10.95)
```

Frame : 0

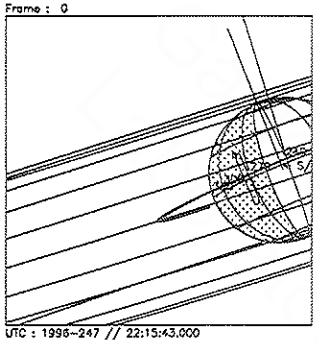

UTC : 1996-247 // 22:15:43.000
SCLK: 1/03595389:86:8:3

Frame : 1

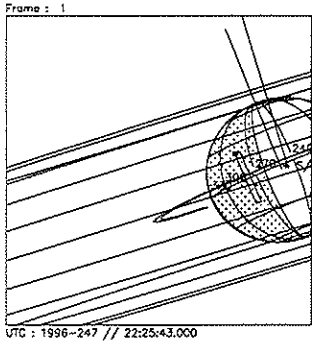

UTC : 1996-247 // 22:25:43.000
SCLK: 1/03595399:76:8:3

Frame : 2

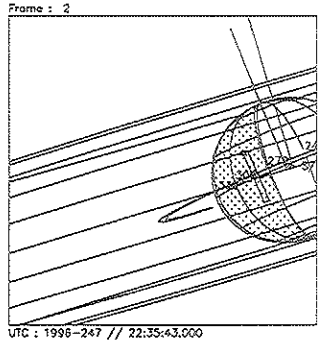

UTC : 1996-247 // 22:35:43.000
SCLK: 1/03595409:66:8:4

Frame : 3

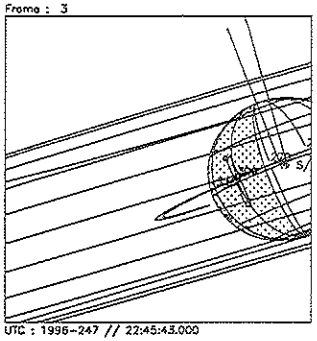

UTC : 1996-247 // 22:45:43.000
SCLK: 1/03595419:56:8:4

Frame : 4

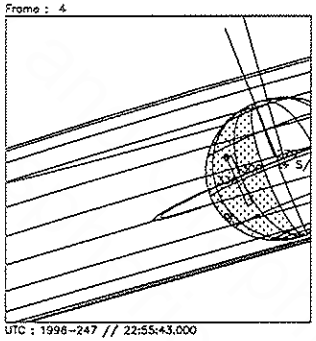

UTC : 1996-247 // 22:55:43.000
SCLK: 1/03595429:46:8:4

Frame : 5

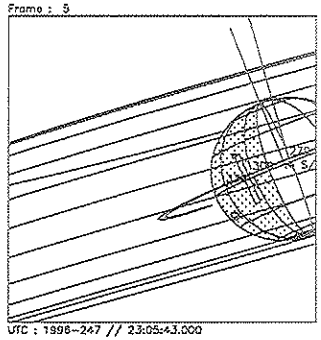

UTC : 1996-247 // 23:05:43.000
SCLK: 1/03595439:36:8:4

Frame : 6

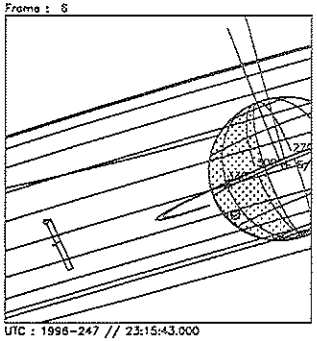

UTC : 1996-247 // 23:15:43.000
SCLK: 1/03595449:26:8:4

Frame : 7

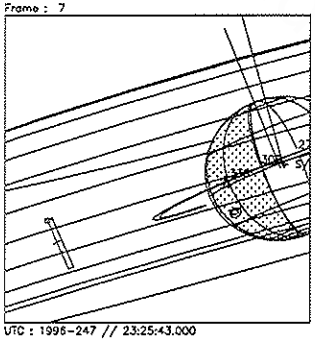

UTC : 1996-247 // 23:25:43.000
SCLK: 1/03595459:16:8:4

Frame : 8

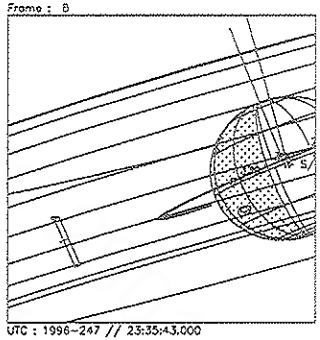

UTC : 1996-247 // 23:35:43.000
SCLK: 1/03595469:06:8:4

Start UTC_TIME : 1996-247 // 22:15:43.000
End UTC_TIME : 1996-247 // 23:41:40.000
Start SCLK : 1/03595389:86:8:3
Delta Time between FOV : 600.0000
FOVs : N/G Channel(0.1x1.0)

Target Body : JUPITER
Target Ra/Dec : 207.86/ -9.41 Deg
S/C to Body Center : 2882508. Km (40.319311 Rj)
Z-axis Pointing (Ra / Dec) : 98.60 / 25.00 Deg

Frame : 0

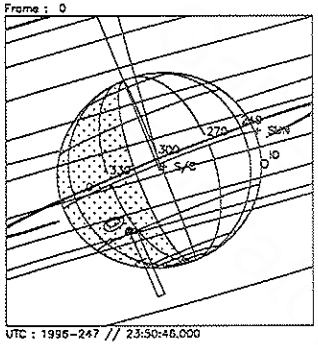

UTC : 1996-247 // 23:50:46.000
SCLK: 1/03595483:87:3:4

Frame : 1

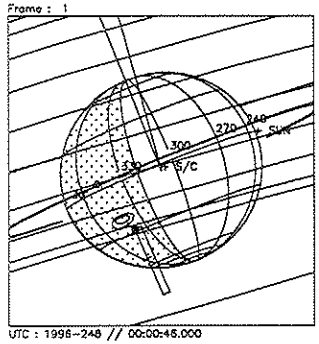

UTC : 1996-248 // 00:00:46.000
SCLK: 1/03595493:77:3:4

Frame : 2

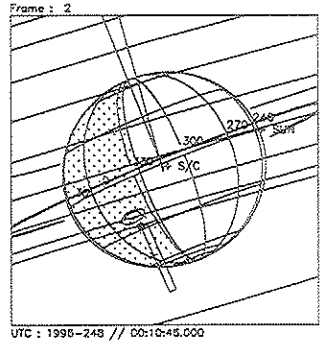

UTC : 1996-248 // 00:10:46.000
SCLK: 1/03595503:67:3:4

Frame : 3

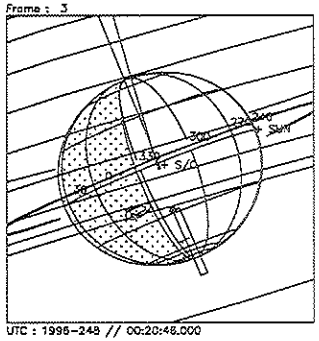

UTC : 1996-248 // 00:20:46.000
SCLK: 1/03595513:57:3:4

Frame : 4

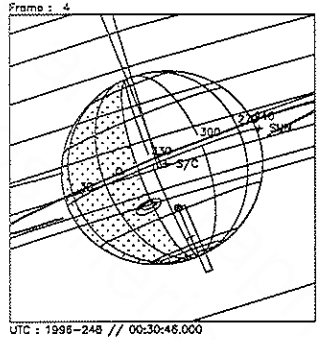

UTC : 1996-248 // 00:30:46.000
SCLK: 1/03595523:47:3:4

Frame : 5

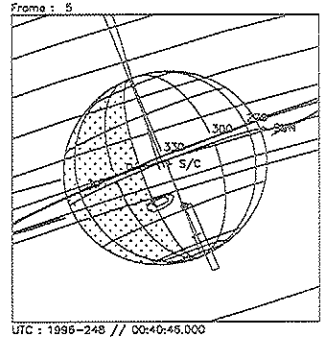

UTC : 1996-248 // 00:40:46.000
SCLK: 1/03595533:37:3:4

Frame : 6

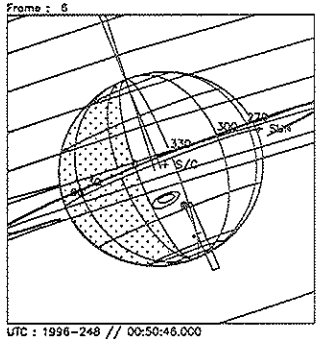

UTC : 1996-248 // 00:50:46.000
SCLK: 1/03595543:27:3:4

← F/G in here →

Frame : 7

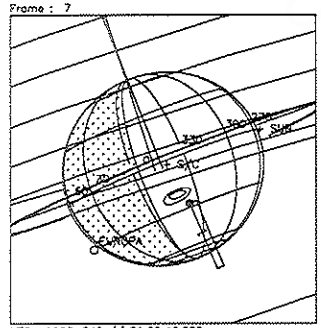

UTC : 1996-248 // 01:00:46.000
SCLK: 1/03595553:17:3:4

Frame : 8

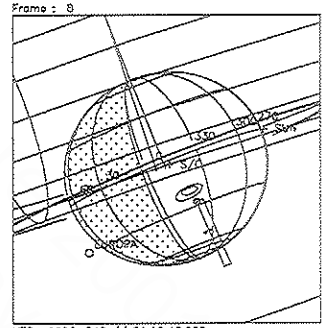

UTC : 1996-248 // 01:10:46.000
SCLK: 1/03595563:07:3:4

Start UTC_TIME : 1996-247 // 23:50:46.000
End UTC_TIME : 1996-248 // 01:16:42.000
Start SCLK : 1/03595483:87:3:4
Delta Time between FOV : 600.0000
FOVs : N/G Channel(0.1x1.0)

Target Body : JUPITER
Target Ra/Dec : 208.36/ -9.63 Deg
S/C to Body Center : 2846068. Km (39.809606 Rj)
Z-axis Pointing (Ra / Dec) : 98.60 / 25.00 Deg

ACTIVITY ID: G2JUAURMAP01-

START TIME: 96-247/23:46:49.933

Activity ID:	Orbit G2	**OAPEL**	JUAURMAP	**SeqNo**	01-
Title	Auroral map			**Instrument**	UVS
Requestor	W. KENT TOBISKA	**Team**	UVS	**Working Group**	AWG

Time System	CDS	**Load ID**		**Calendar Date**	09/03/96 Week 36
Start	JEE-CDS 00005094:00:0	96-247/23:46:49.933		JEE-003/13:50:36.000	
End	JEE-CDS 00005000:00:0	96-248/01:21:52.600		JEE-003/12:15:33.333	
Duration	00000094:00:0	000/01:35:02.667		000/01:35:02.667	

Top Label	G2JUAURMAP01-				
Bottom Label	realtime				
Plot Key	UVS	**Type**	SCI		
CDS Bytes	255	**Report Options**	BOTH	**Scan Platform**	Yes
CDS Source	OAP	**Spin State**	DUAL	**DMS**	No

Observation Objective

Southern auroral map of dayside - nightside assymetry (320-330).

Realtime observation at 10 bps for 1.5 hours; G/G full-scan and 2 RIMS F/G full-scan on brightside. 5 RIMs UVS OFF/FIXED every 30 RIMs for PWS. Expect RTSFMT=D. Distance from Jupiter = 39 Rj.

Last cn/ck = 112.8/93.8 (from DRKMAP)

Design Detail

```
PSID   CDS  RIM  COMMAND  PARAMETERS
384AD   00   00  COMMNT  UVS RIM 0
 61AD   37   02+LOOPER  DUR = 30 RIMS; REPEAT = 3
349AD   28   03+UVFLSH  DISCRD,UVS
157AD   38   03  CMDRS   PLAN_DUR = 26 RIMS; EST_UVS_CMDS = 2
             04        1  34UVS/UVG:07,SCAN,NORM,NORM,NORM,SAME,0,OFF,OFF,ON,ON,OFF,NOOVR,1,2C,9D,00,00
             29       26  34UVS/OFF:C1,FIXED,NORM,NORM,NORM,SAME,0,OFF,OFF,ON,OFF,OFF,NOOVR,1,2C,05,00,00
165AF   36   04  TARGET  Lat/lon = -60/0 (no TMC) (RA/Dec = 208.54/-10.90)
165AG   36   34  TARGET  Lat/lon = -60/320 (no TMC) (RA/Dec = 208.1/-10.72)
349AE   28   55+UVFLSH  PACKET,UVS
157AE   24   56  CMDRS   PLAN_DUR = 1 RIM; EST_UVS_CMDS = 1
             57        1  34UVS/UVF:07,SCAN,NORM,NORM,NORM,SAME,0,ON,OFF,ON,ON,OFF,NOOVR,1,00,9C,01,2C
349AF   28   62+UVFLSH  PACKET,UVS
```

Activity ID: Orbit G2 **OAPEL** JUBRTMAP **SeqNo** 01-

Title Brightside map **Instrument** UVS

Requestor W. KENT TOBISKA **Team** UVS **Working Group** AWG

Time System CDS **Load ID** **Calendar Date** 09/04/96 **Week** 36

Start	JEE-CDS 00005000:00:0	96-248/01:21:52.600	JEE-003/12:15:33.333
End	JEE-CDS 00004696:00:0	96-248/06:29:15.267	JEE-003/07:08:10.666
Duration	00000304:00:0	000/05:07:22.667	000/05:07:22.667

Top Label G2JUBRTMAP01-

Bottom Label realtime

Plot Key UVS **Type** SCI

CDS Bytes 401 **Report Options** BOTH **Scan Platform** Yes

CDS Source OAP **Spin State** DUAL **DMS** No

Observation Objective

Global UV energy budget with brightside map. E-W along equator; N-S along central meridian (including the auroral zones).

Realtime observation at 10 bps for 5.0 hours; full G/G scan with full F/G for 2 RIMS near the sub-spacecraft point. 10 RIMs UVS OFF/FIXED every 30 RIMs for PWS. Expect RTSFMT=D. Distance from Jupiter = 38 Rj.

Last cn/ck = 112.29/89.99 (from AURMAP)

Design Detail

```
PSID   CDS  RIM  COMMAND  PARAMETERS
384AE   00   00  COMMNT  UVS RIM 0
 61AE   37   02+LOOPER  DUR = 30 RIMS; REPEAT = 10
349AG   28   03+UVFLSH  DISCRD,UVS
157AF   38   03  CMDRS   PLAN_DUR = 21 RIMS; EST_UVS_CMDS = 2
             04        1  34UVS/UVG:07,SCAN,NORM,NORM,NORM,SAME,0,OFF,OFF,ON,ON,OFF,NOOVR,1,2C,9D,00,00
             24       21  34UVS/OFF:C1,FIXED,NORM,NORM,NORM,SAME,0,OFF,OFF,ON,OFF,OFF,NOOVR,1,2C,05,00,00
165AH   36   04  TARGET  Lat/lon = 0/0 (no TMC) (RA/Dec = 208.93/-9.76)
349AH   28   50+UVFLSH  PACKET,UVS
157AG   24   51  CMDRS   PLAN_DUR = 1 RIM; EST_UVS_CMDS = 1
             52        1  34UVS/UVF:07,SCAN,NORM,NORM,NORM,SAME,0,ON,OFF,ON,ON,OFF,NOOVR,1,00,9C,01,2C
349AI   28   62+UVFLSH  PACKET,UVS
165AI   36  184  TARGET  Lat/lon = 50/107 (no TMC) (RA/Dec = 210.22/-9.39)
165AJ   36  214  TARGET  Lat/lon = 15/127 (no TMC) (RA/Dec = 210.25/-9.96)
165AK   36  244  TARGET  Lat/lon = -15/145 no TMC) (RA/Dec = 210.16/-10.69)
165AL   36  274  TARGET  Lat/lon = -50/165 no TMC) (RA/Dec = 210.16/-11.30)
432AF   38  304+OPTRTM  UVS_STATUS = EXCLUDE; BS = 45
```

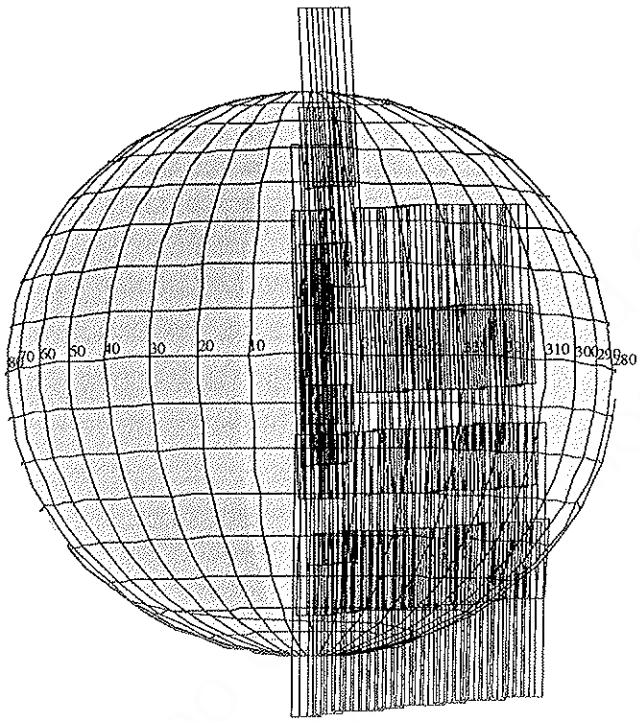

165AH:TT= 0 TMC=1 C= 0.00 XC= 0.00 BS=0/4254 TC=1(0 0)
A=728 pD= 0 SR=5.000 RA50=208.93 DEC50=-9.78 cone=112.46 clock=91.22
165AI:TT= 0 TMC=1 C= 0.00 XC= 0.00 BS=0/7014 TC=1(50 107)
A=728 pD= 0 SR=4.000 RA50=210.29 DEC50=-9.25 cone=113.49 clock=92.32
165AJ:TT= 0 TMC=1 C= 0.00 XC= 0.00 BS=0/2474 TC=1(15 127)
A=728 pD= 0 SR=3.000 RA50=210.25 DEC50=-9.98 cone=113.74 clock=91.58
165AK:TT= 0 TMC=1 C= 0.00 XC= 0.00 BS=0/7934 TC=1(-15 145)
A=728 pD= 0 SR=3.000 RA50=210.16 DEC50=-10.70 cone=113.94 clock=90.81
165AL:TT= 0 TMC=1 C= 0.00 XC= 0.00 BS=0/3394 TC=1(-50 165)
A=728 pD= 0 SR=3.000 RA50=210.09 DEC50=-11.49 cone=114.17 clock=89.98

ESIGN G1.0 kent : 7/12/1996 14:32:19

ILE:P.G2JUBRTMAP01

ENTRAL BODY:JUPITER III

INI:m.G2JUBRTMAP01

.PH:/DATA/NAVIO/T-960628-TOUR.NS

ERIAPSIS:

TART:JEE 96-251/13:37:25.933 -CDS 4996:00:0

THINNING:NONE :UVS 14

BODY PLOT TIME:START-TIME D= 0 S= 0.800

Frame : 0

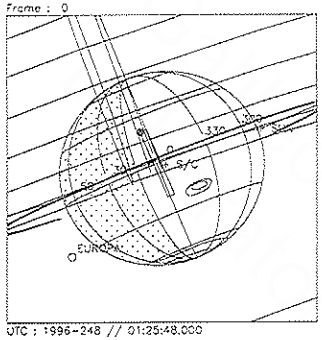

UTC : 1996-248 // 01:25:48.000
SCLK: 1/03595577:86:3:4

Frame : 1

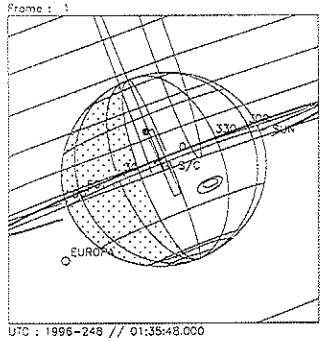

UTC : 1996-248 // 01:35:48.000
SCLK: 1/03595587:76:3:4

Frame : 2

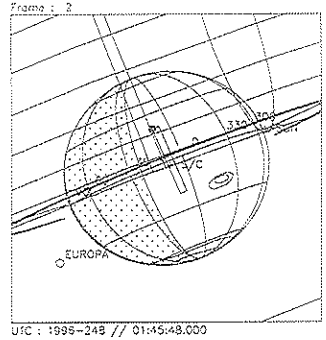

UTC : 1996-248 // 01:45:48.000
SCLK: 1/03595597:66:3:4

Frame : 3

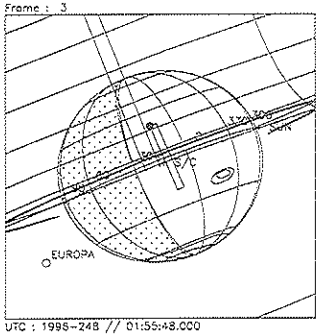

UTC : 1996-248 // 01:55:48.000
SCLK: 1/03595607:56:3:4

Frame : 4

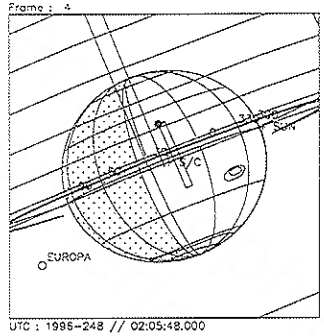

UTC : 1996-248 // 02:05:48.000
SCLK: 1/03595617:46:3:4

Frame : 5

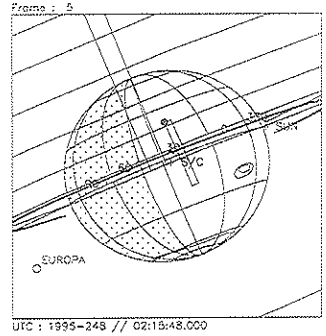

UTC : 1996-248 // 02:15:48.000
SCLK: 1/03595627:36:3:5

Frame : 6

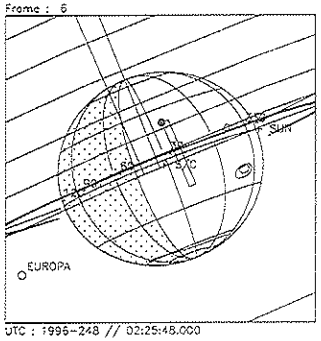

UTC : 1996-248 // 02:25:48.000
SCLK: 1/03595637:26:3:5

Frame : 7

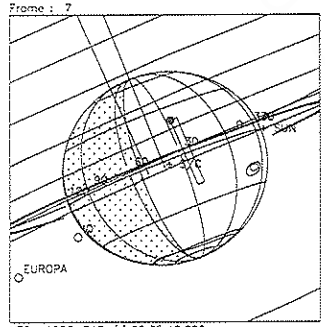

UTC : 1996-248 // 02:35:48.000
SCLK: 1/03595647:16:3:5

Frame : 8

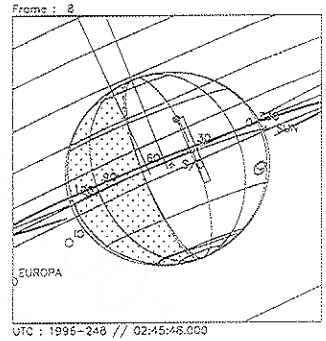

UTC : 1996-248 // 02:45:48.000
SCLK: 1/03595657:06:3:5

Start UTC_TIME : 1996-248 // 01:25:48.000
End UTC_TIME : 1996-248 // 06:19:02.000
Start SCLK : 1/03595577:86:3:4
Delta Time between FOV : 600.0000
FOVs : N/G Channel(0.5x0.5)

Target Body : JUPITER
Target Cone/Clock : 112.44/ 91.13 Deg
S/C to Body Center : 2809383. Km (39.296473 Rj)
Z-axis Pointing (Ra / Dec) : 98.60 / 25.00 Deg

Frame : 9

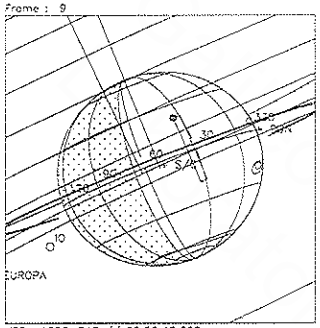

UTC : 1996-248 // 02:55:48.000
SCLK: 1/03595666:87:3:5

Frame : 10

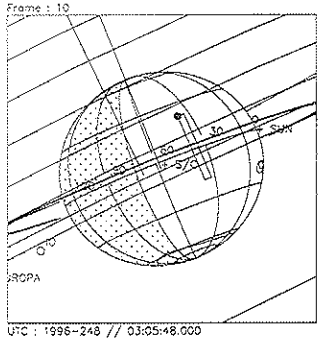

UTC : 1996-248 // 03:05:48.000
SCLK: 1/03595676:77:3:5

Frame : 11

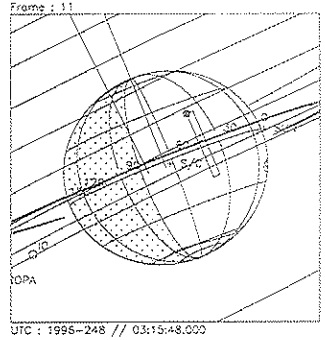

UTC : 1996-248 // 03:15:48.000
SCLK: 1/03595686:87:3:5

Frame : 12

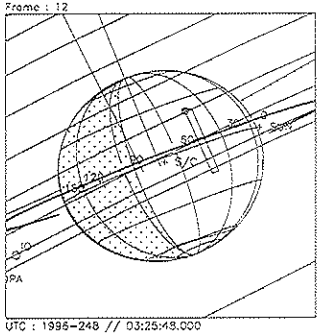

UTC : 1996-248 // 03:25:48.000
SCLK: 1/03595696:57:3:5

Frame : 13

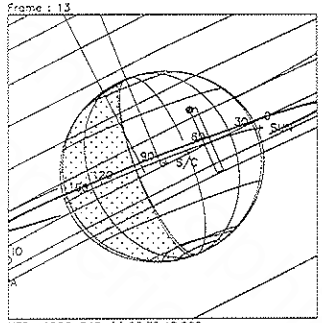

UTC : 1996-248 // 03:35:48.000
SCLK: 1/03595706:47:3:5

Frame : 14

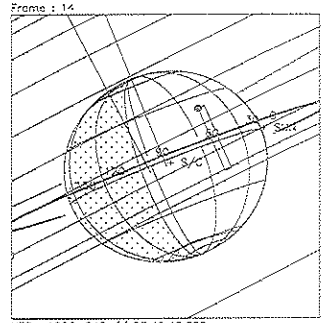

UTC : 1996-248 // 03:45:48.000
SCLK: 1/03595716:37:3:5

Frame : 15

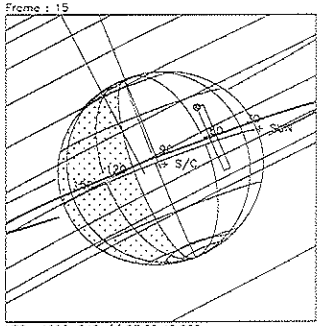

UTC : 1996-248 // 03:55:48.000
SCLK: 1/03595726:27:3:5

Frame : 16

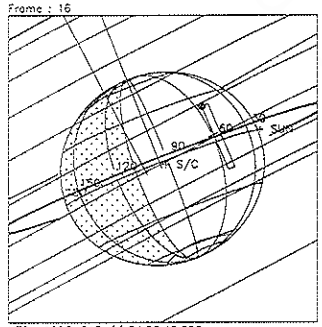

UTC : 1996-248 // 04:05:48.000
SCLK: 1/03595736:17:3:5

Frame : 17

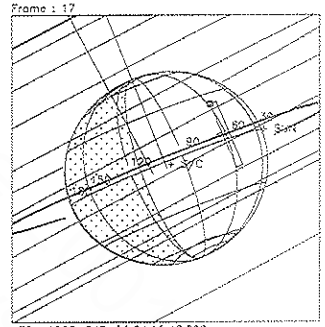

UTC : 1996-248 // 04:15:48.000
SCLK: 1/03595746:07:3:5

Start UTC_TIME : 1996-248 // 01:25:48.000
End UTC_TIME : 1996-248 // 06:19:02.000
Start SCLK : 1/03595577:86:3:4
Delta Time between FOV : 600.0000
FOVs : N/G Channel(0.5x0.5)

Target Body : JUPITER
Target Cone/Clock : 112.97/ 91.11 Deg
S/C to Body Center : 2774407. Km (38.807235 Rj)
Z-axis Pointing (Ra / Dec) : 98.60 / 25.00 Deg

Frame : 18

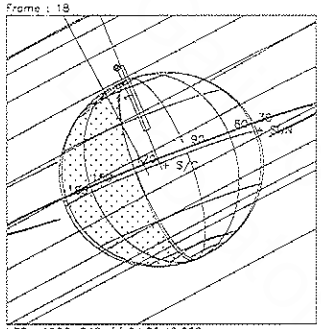

UTC : 1996-248 // 04:25:48.000
SCLK: 1/03595755:88:3:5

Frame : 19

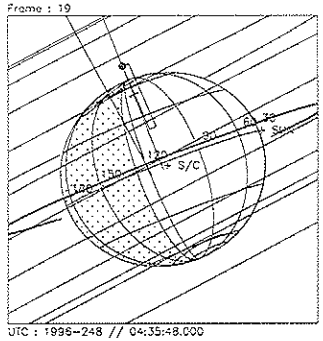

UTC : 1996-248 // 04:35:48.000
SCLK: 1/03595765:78:3:5

Frame : 20

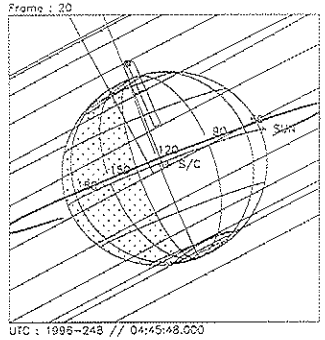

UTC : 1996-248 // 04:45:48.000
SCLK: 1/03595775:68:3:5

Frame : 21

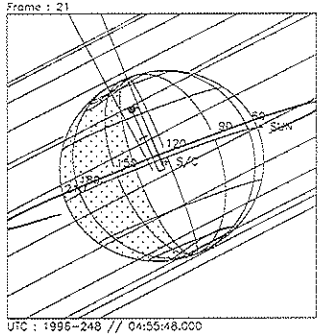

UTC : 1996-248 // 04:55:48.000
SCLK: 1/03595785:58:3:5

Frame : 22

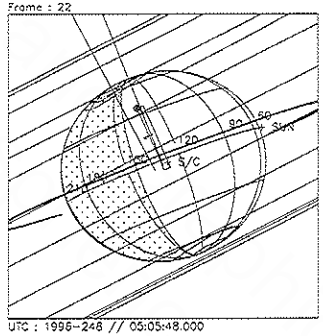

UTC : 1996-248 // 05:05:48.000
SCLK: 1/03595795:48:3:5

Frame : 23

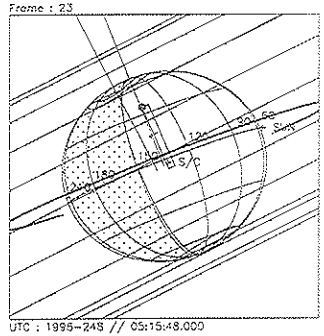

UTC : 1996-248 // 05:15:48.000
SCLK: 1/03595805:38:3:5

Frame : 24

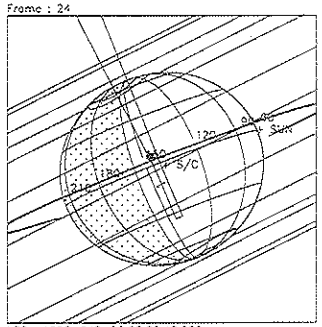

UTC : 1996-248 // 05:25:48.000
SCLK: 1/03595815:28:3:5

Frame : 25

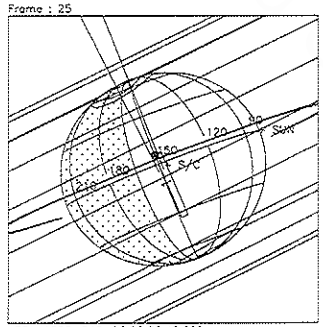

UTC : 1996-248 // 05:35:48.000
SCLK: 1/03595825:18:3:5

Frame : 26

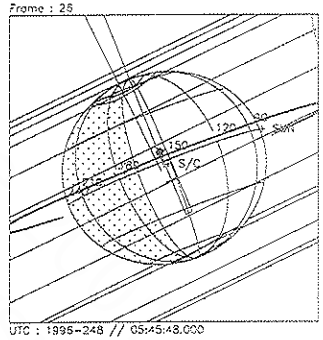

UTC : 1996-248 // 05:45:48.000
SCLK: 1/03595835:08:3:5

Start UTC_TIME : 1996-248 // 01:25:48.000
End UTC_TIME : 1996-248 // 06:19:02.000
Start SCLK : 1/03595577:86:3:4
Delta Time between FOV : 600.0000
FOVs : N/G Channel(0.5x0.5)

Target Body : JUPITER
Target Cone/Clock : 113.52/ 91.10 Deg
S/C to Body Center : 2739199. Km (38.314764 Rj)
Z-axis Pointing (Ra / Dec) : 98.60 / 25.00 Deg

Frame : 27

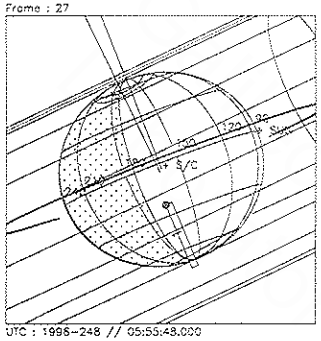

UTC : 1996-248 // 05:55:48.000
SCLK: 1/03595844:89:3:6

Frame : 28

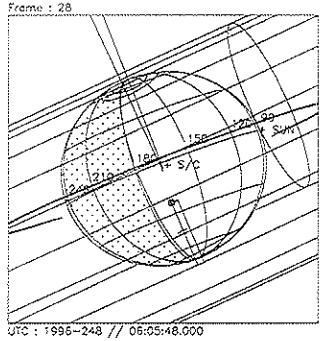

UTC : 1996-248 // 06:05:48.000
SCLK: 1/03595854:79:3:6

Frame : 29

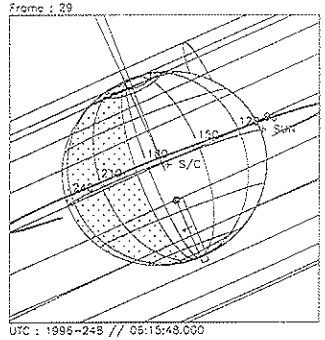

UTC : 1996-248 // 06:15:48.000
SCLK: 1/03595864:69:3:6

Start UTC_TIME : 1996-248 // 01:25:48.000
End UTC_TIME : 1996-248 // 06:19:02.000
Start SCLK : 1/03595577:86:3:4
Delta Time between FOV : 600.0000
FOVs : N/G Channel(0.5x0.5)

Target Body : JUPITER
Target Cone/Clock : 114.08/ 91.09 Deg
S/C to Body Center : 2703757. Km (37.819020 Rj)
Z-axis Pointing (Ra / Dec) : 98.60 / 25.00 Deg

Activity ID:	Orbit G2	OAPEL JUNEWSMP		SeqNo 01-	
Title	North-south-east-west map			**Instrument**	UVS
Requestor	W. KENT TOBISKA	**Team** UVS		**Working Group**	AWG

Time System	CDS	**Load ID**		**Calendar Date** 09/04/96	Week 36
Start	JEE-CDS 00004696:00:0	96-248/06:29:15.267	JEE-003/07:08:10.666		
End	JEE-CDS 00004655:00:0	96-248/07:10:42.600	JEE-003/06:26:43.333		
Duration	00000041:00:0	000/00:41:27.333	000/00:41:27.333		

Top Label	G2JUNEWSMP01-				
Bottom Label	recorded				
Plot Key	UVS	**Type**	SCI		
CDS Bytes	230	**Report Options**	BOTH	**Scan Platform**	Yes
CDS Source	OAP	**Spin State**	DUAL	**DMS**	Yes

Observation Objective

North-south-east-west map for study of dayglow/electroglow. Can determine limb-darkening curves of H Lyman-a and can determine global H2 band emission distribution.

Recorded observation; F/G full scan. Distance from Jupiter = 37 Rj.

Last cn/ck = 114.39/90.26 (from BRTMAP).

[NOTE: SELECT 37 RIMS IN PBK WITH AN ASSUMED COMPRESSION RATIO OF 2:1. THIS GIVES 1.13 MBTG + 0.08 MBTG AACS = 1.21 MBTG TOTAL.]

Design Detail

```
PSID   CDS  RIM  COMMAND PARAMETERS
384AF  00   00   COMMNT UVS RIM 0
305AA  00   04   SELECT INSTR=UVS2, COMPR=RICE, CMPR_DVSR=2.0, CMPR_UNC=0.0; 4692:06:0
175AA  18   04   SCIREC MODE_RATE = R7, DUR = 37:00:0, PREV_RATE = R28
157AH  66   03   CMDRS  PLAN_DUR = 38 RIMS; EST_UVS_CMDS = 2
            04        1 34UVS/UVF:07,SCAN,NORM,NORM,NORM,SAME,0,ON,OFF,ON,ON,OFF,NOOVR,1,00,9C,01,2C
            41       38 34UVS/OFF:C1,FIXED,NORM,NORM,NORM,SAME,0,OFF,OFF,ON,OFF,OFF,NOOVR,1,2C,05,00,00
165AM  36   04   TARGET subsc pt; cn_off=32.0;xcn_off=12.0 (start @ 30lat off dark limb)
117AB  37   04   CSMOS  PLAN_DUR = 26 (3 E-W slews)
165AO  36   31   TARGET subsc pt; cn_off=-7.0;xcn_off=45.0 (start above > pole)
117AD  37   31   CSMOS  PLAN_DUR = 9:80:0 (N-S slew); cn_del_s=4.0;xcn_del_s=-90.0
300AA  00   41   DESELC INSTR=UVS2; 4655:06:0
```

Frame : 0

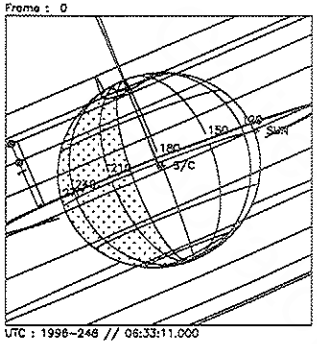

UTC : 1996-248 // 06:33:11.000
SCLK: 1/03595881:86:8:6

Frame : 1

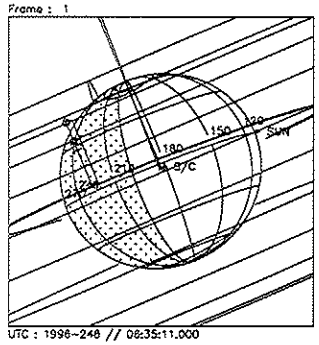

UTC : 1996-248 // 06:35:11.000
SCLK: 1/03595883:84:8:6

Frame : 2

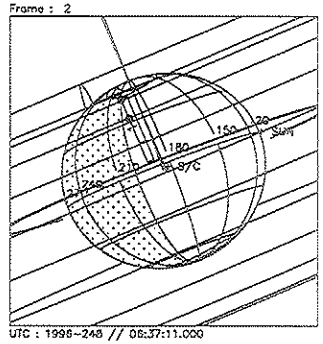

UTC : 1996-248 // 06:37:11.000
SCLK: 1/03595885:82:8:6

Frame : 3

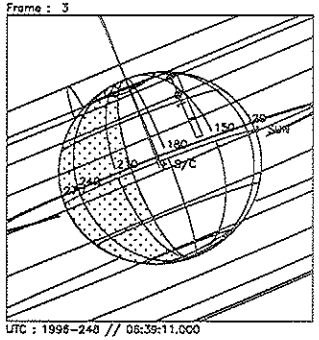

UTC : 1996-248 // 06:39:11.000
SCLK: 1/03595887:80:8:6

Frame : 4

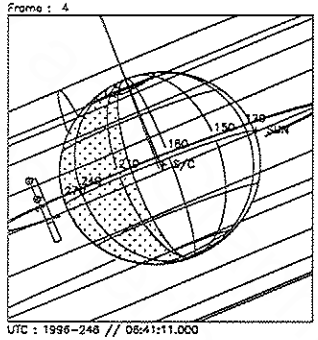

UTC : 1996-248 // 06:41:11.000
SCLK: 1/03595889:78:8:6

Frame : 5

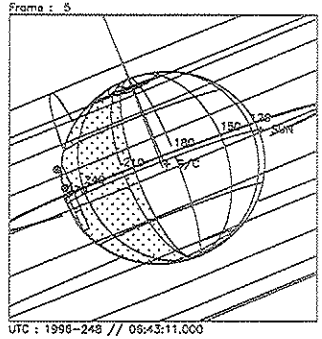

UTC : 1996-248 // 06:43:11.000
SCLK: 1/03595891:76:8:6

Frame : 6

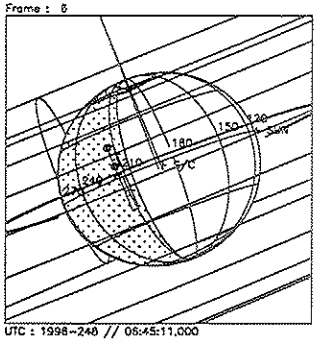

UTC : 1996-248 // 06:45:11.000
SCLK: 1/03595893:74:8:6

Frame : 7

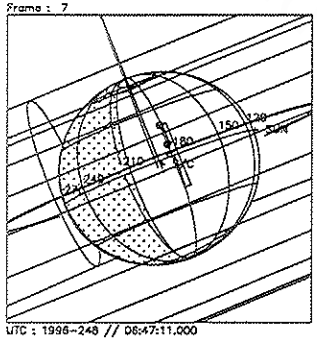

UTC : 1996-248 // 06:47:11.000
SCLK: 1/03595895:72:8:6

Frame : 8

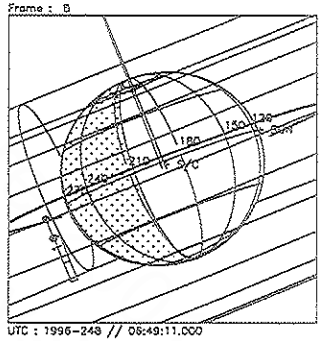

UTC : 1996-248 // 06:49:11.000
SCLK: 1/03595897:70:8:6

Start UTC_TIME : 1996-248 // 06:33:11.000
End UTC_TIME : 1996-248 // 07:10:36.000
Start SCLK : 1/03595881:86:8:6
Delta Time between FOV : 120.0000
FOVs : F Channel(0.1x0.4), N/G Channel(0.1x1.0)

Target Body : JUPITER
Target Cone/Clock : 114.32/ 91.09 Deg
S/C to Body Center : 2688967. Km (37.612132 Rj)
Z-axis Pointing (Ra / Dec) : 98.60 / 25.00 Deg

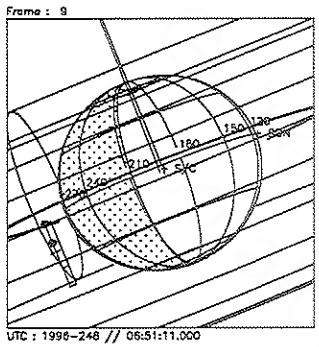

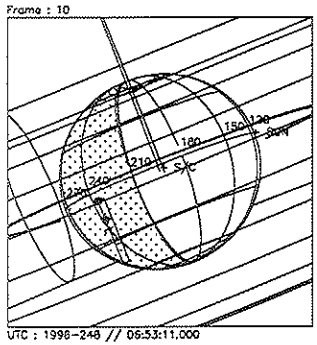

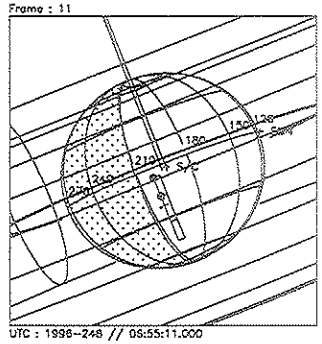

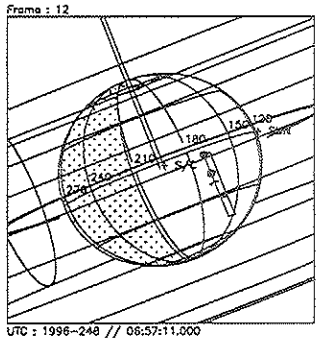

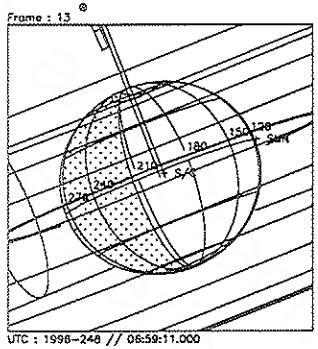

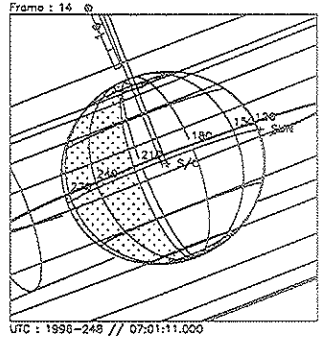

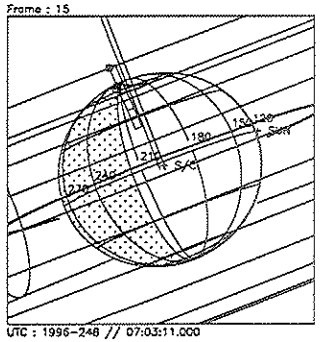

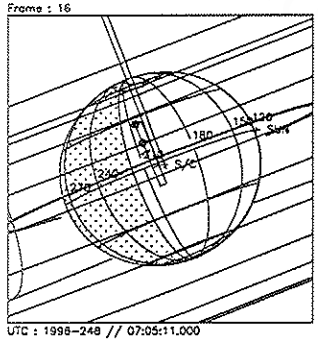

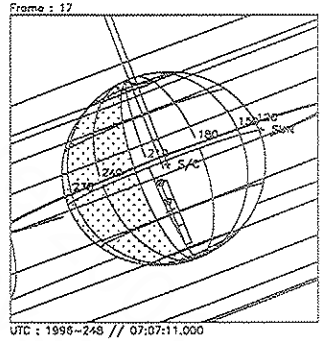

Start UTC_TIME : 1996-248 // 06:33:11.000
End UTC_TIME : 1996-248 // 07:10:36.000
Start SCLK : 1/03595881:86:8:6
Delta Time between FOV : 120.0000
FOVs : F Channel(0.1x0.4), N/G Channel(0.1x1.0)

Target Body : JUPITER
Target Cone/Clock : 114.44/ 91.09 Deg
S/C to Body Center : 2681830. Km (37.512311 Rj)
Z-axis Pointing (Ra / Dec) : 98.60 / 25.00 Deg

Frame : 18

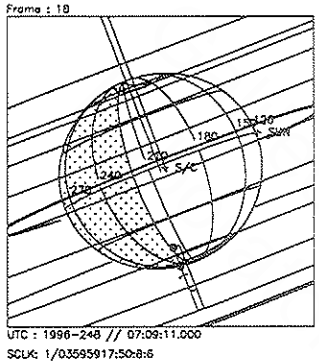

UTC : 1996-248 // 07:09:11.000
SCLK: 1/03595917:50:8:6

Start UTC_TIME : 1996-248 // 06:33:11.000
End UTC_TIME : 1996-248 // 07:10:36.000
Start SCLK : 1/03595881:86:8:6
Delta Time between FOV : 120.0000
FOVs : F Channel(0.1x0.4), N/G Channel(0.1x1.0)

Target Body : JUPITER
Target Cone/Clock : 114.55/ 91.08 Deg
S/C to Body Center : 2674684. Km (37.412357 Rj)
Z-axis Pointing (Ra / Dec) : 98.60 / 25.00 Deg

Activity ID:	**Orbit** G2	**OAPEL** JUGLOMOS		**SeqNo** 01+	
Title	Global mosaic ridealong			**Instrument**	UVS
Requestor	W. KENT TOBISKA	**Team** UVS		**Working Group**	AWG

Time System	CDS	**Load ID**		**Calendar Date** 09/05/96	Week 36
Start	JEE-CDS 00003592:00:0	96-249/01:05:31.267	JEE-002/12:31:54.666		
End	JEE-CDS 00003577:00:0	96-249/01:20:41.267	JEE-002/12:16:44.666		
Duration	00000015:00:0	000/00:15:10.000	000/00:15:10.000		

Top Label	G2JUGLOMOS01+				
Bottom Label	Recorded				
Plot Key	UVS	**Type**	SCI		
CDS Bytes	38	**Report Options**	BOTH	**Scan Platform**	No
CDS Source	OAP	**Spin State**	DUAL	**DMS**	No

Observation Objective

Ridealong with NIMS (G2JNGLOMOS01-) on global mosaic for brightside FUV H Lyman-alpha mapping in conjunction with thermal emission mapping at 28-30 Rj. UVS turned off for last couple footprints of the observation but is off of planet. This is because UVS commands on RIM boundaries but the recording is blockshifted off the RIM boundaries.

Recorded observation. G/G Ly-a 88 step 2 posn miniscan. Distance from Jupiter = 31 Rj.

[NOTE: SELECT 9.5 RIMS OF DATA ASSUMING A COMPRESSION OF 2:1 = 0.298 MBTG.]

Design Detail

```
PSID   CDS  RIM  COMMAND  PARAMETERS
384AG  00   00   COMMNT  UVS RIM 0
157AU  38   03   CMDRS    PLAN_DUR = 11 RIMS; EST_UVS_CMDS = 2
            04         1  34UVS/UVG:DF,FIXED,NORM,NORM,NORM,SAME,0,OFF,OFF,ON,ON,OFF,NOOVR,1,2C,7D,00,2C
            14        11  34UVS/OFF:C1,FIXED,NORM,NORM,NORM,SAME,0,OFF,OFF,ON,OFF,OFF,NOOVR,1,2C,05,00,00
165DB  00   03   TARGET
175DB  00   03+SCIREC
117DB  00   03+CSMOS
305AD  00   04+SELECT  INSTR=UVS2,  COMPR=RICE,  CMPR_DVSR=2.0,  CMPR_UNC=0.0;  3588:51:0
300AD  00   14  DESELC  INSTR=UVS2;  3577:06:0
```

Frame : 0

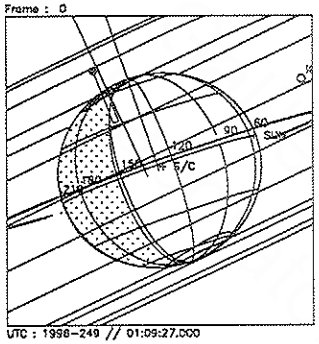

UTC : 1996-249 // 01:09:27.000
SCLK: 1/03596985:86:9:3

Frame : 1

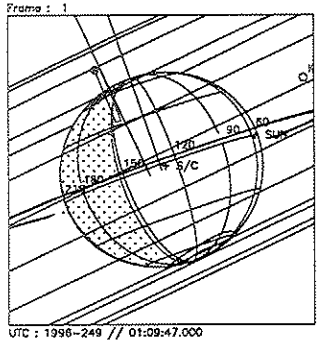

UTC : 1996-249 // 01:09:47.000
SCLK: 1/03596988:25:9:3

Frame : 2

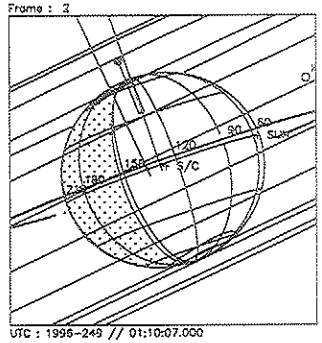

UTC : 1996-249 // 01:10:07.000
SCLK: 1/03596988:55:9:3

Frame : 3

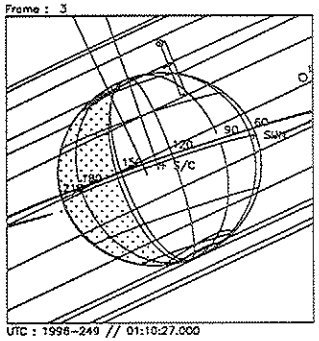

UTC : 1996-249 // 01:10:27.000
SCLK: 1/03596986:85:9:3

Frame : 4

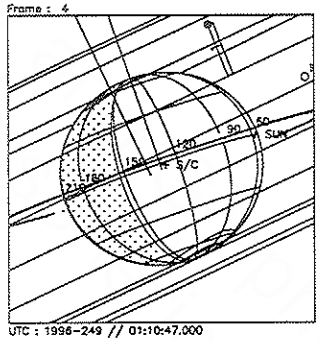

UTC : 1996-249 // 01:10:47.000
SCLK: 1/03596987:24:9:3

Frame : 5

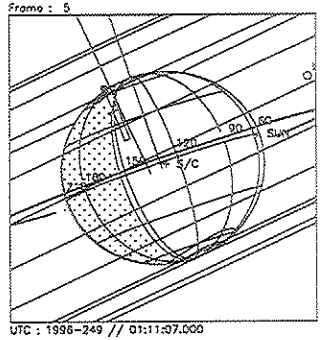

UTC : 1996-249 // 01:11:07.000
SCLK: 1/03596987:54:9:3

Frame : 6

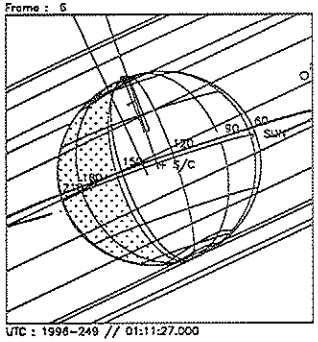

UTC : 1996-249 // 01:11:27.000
SCLK: 1/03596987:84:9:3

Frame : 7

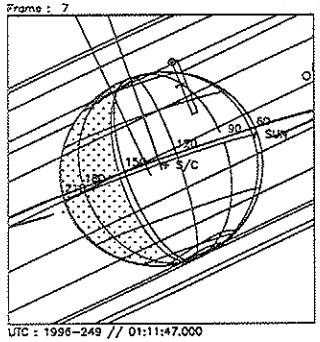

UTC : 1996-249 // 01:11:47.000
SCLK: 1/03596988:23:9:3

Frame : 8

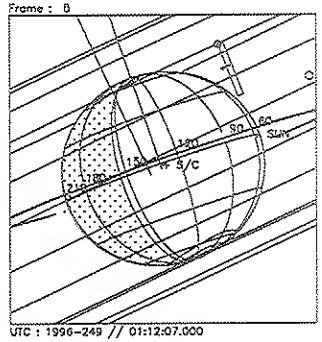

UTC : 1996-249 // 01:12:07.000
SCLK: 1/03596988:53:9:3

Start UTC_TIME : 1996-249 // 01:09:27.000
End UTC_TIME : 1996-249 // 01:19:34.000
Start SCLK : 1/03596985:86:9:3
Delta Time between FOV : 20.00000
FOVs : N/G Channel(0.1x1.0)

Target Body : JUPITER
Target Ra/Dec : 218.73/-13.99 Deg
S/C to Body Center : 2227524. Km (31.157674 Rj)
Z-axis Pointing (Ra / Dec) : 98.60 / 25.00 Deg

Frame : 9

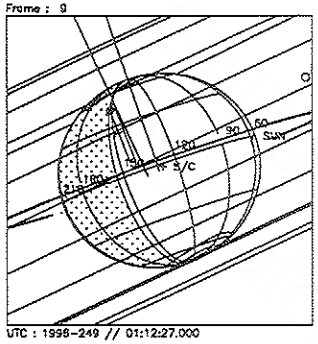

UTC : 1996-249 // 01:12:27.000
SCLK: 1/03596988:83:9:3

Frame : 10

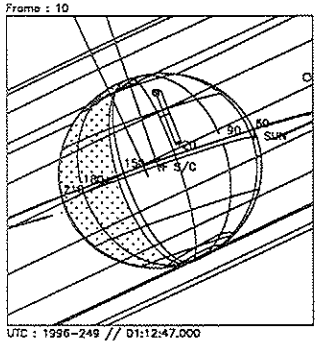

UTC : 1996-249 // 01:12:47.000
SCLK: 1/03596989:22:9:3

Frame : 11

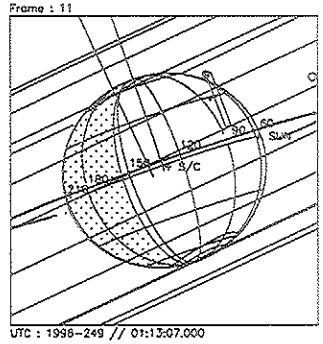

UTC : 1996-249 // 01:13:07.000
SCLK: 1/03596989:52:9:3

Frame : 12

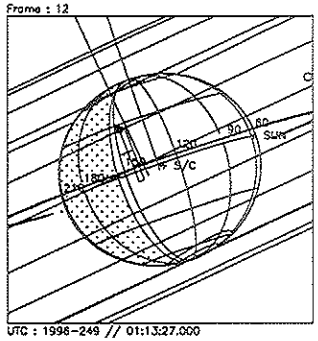

UTC : 1996-249 // 01:13:27.000
SCLK: 1/03596989:82:9:3

Frame : 13

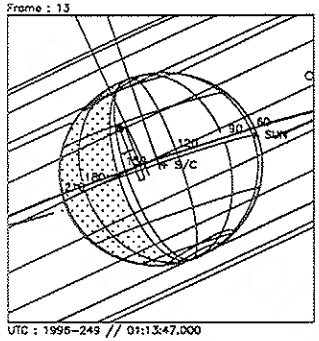

UTC : 1996-249 // 01:13:47.000
SCLK: 1/03596990:21:9:3

Frame : 14

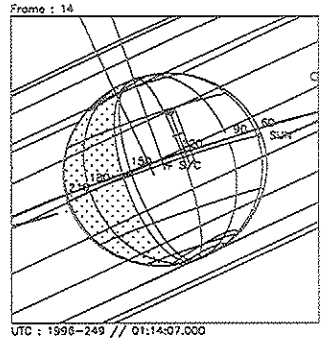

UTC : 1996-249 // 01:14:07.000
SCLK: 1/03596990:51:9:3

Frame : 15

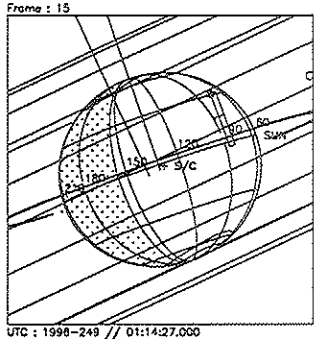

UTC : 1996-249 // 01:14:27.000
SCLK: 1/03596990:81:9:3

Frame : 16

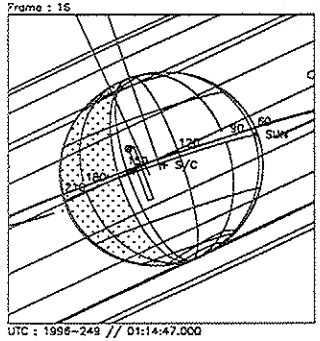

UTC : 1996-249 // 01:14:47.000
SCLK: 1/03596991:20:9:3

Frame : 17

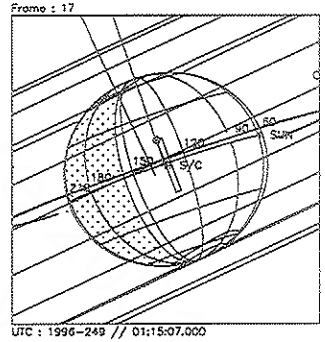

UTC : 1996-249 // 01:15:07.000
SCLK: 1/03596991:50:9:3

Start UTC_TIME : 1996-249 // 01:09:27.000
End UTC_TIME : 1996-249 // 01:19:34.000
Start SCLK : 1/03596985:86:9:3
Delta Time between FOV : 20.00000
FOVs : N/G Channel(0.1x1.0)

Target Body : JUPITER
Target Ra/Dec : 218.76/-14.00 Deg
S/C to Body Center : 2226231. Km (31.139576 Rj)
Z-axis Pointing (Ra / Dec) : 98.60 / 25.00 Deg

Frame : 18

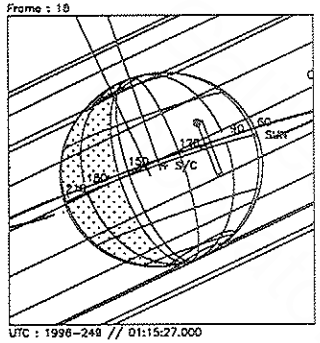

UTC : 1996-249 // 01:15:27.000
SCLK: 1/03596991:80:9:3

Frame : 19

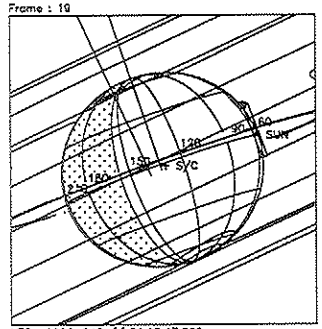

UTC : 1996-249 // 01:15:47.000
SCLK: 1/03596992:19:9:3

Frame : 20

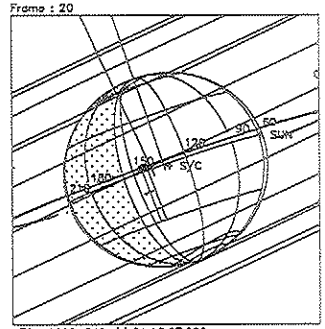

UTC : 1996-249 // 01:16:07.000
SCLK: 1/03596992:49:9:3

Frame : 21

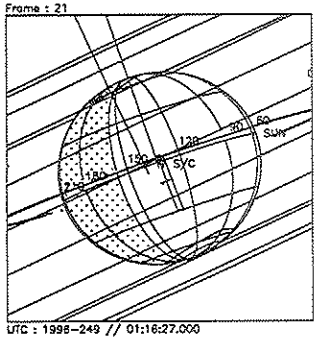

UTC : 1996-249 // 01:16:27.000
SCLK: 1/03596992:79:9:3

Frame : 22

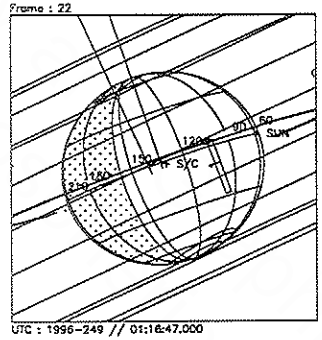

UTC : 1996-249 // 01:16:47.000
SCLK: 1/03596993:18:9:3

Frame : 23

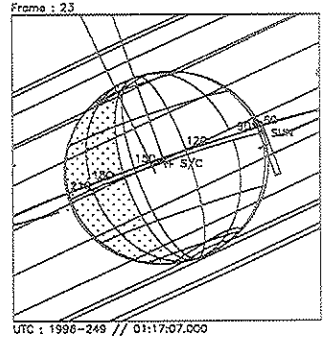

UTC : 1996-249 // 01:17:07.000
SCLK: 1/03596993:48:9:3

Frame : 24

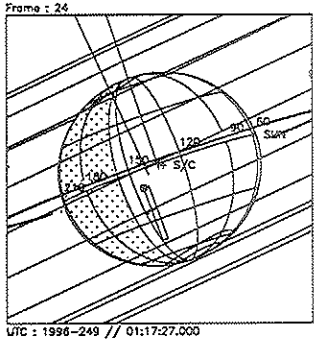

UTC : 1996-249 // 01:17:27.000
SCLK: 1/03596993:78:9:3

Frame : 25

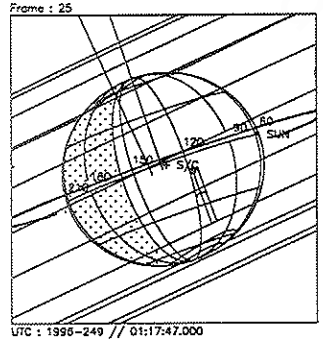

UTC : 1996-249 // 01:17:47.000
SCLK: 1/03596994:17:9:3

Frame : 26

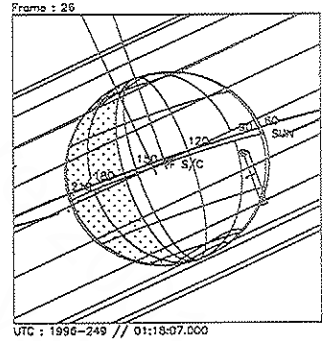

UTC : 1996-249 // 01:18:07.000
SCLK: 1/03596994:47:9:3

Start UTC_TIME : 1996-249 // 01:09:27.000
End UTC_TIME : 1996-249 // 01:19:34.000
Start SCLK : 1/03596985:86:9:3
Delta Time between FOV : 20.00000
FOVs : N/G Channel(0.1x1.0)

Target Body : JUPITER
Target Ra/Dec : 218.79/-14.01 Deg
S/C to Body Center : 2224936. Km (31.121474 Rj)
Z-axis Pointing (Ra / Dec) : 98.60 / 25.00 Deg

Frame : 27

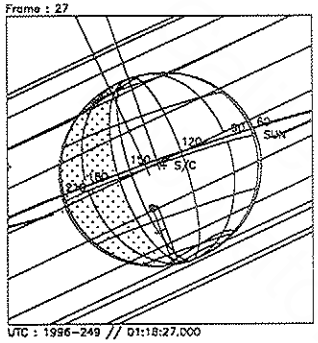

UTC : 1996-249 // 01:18:27.000
SCLK: 1/03596994:77:9:3

Frame : 28

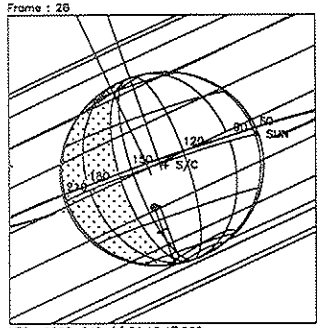

UTC : 1996-249 // 01:18:47.000
SCLK: 1/03596995:16:9:3

Frame : 29

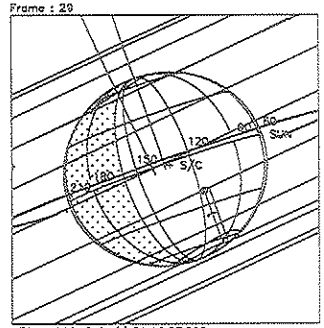

UTC : 1996-249 // 01:19:07.000
SCLK: 1/03596995:46:9:3

Frame : 30

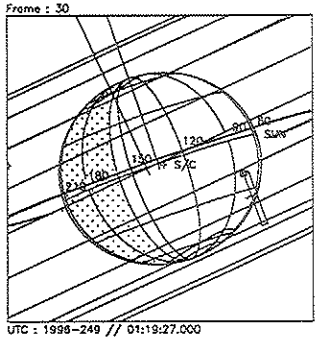

UTC : 1996-249 // 01:19:27.000
SCLK: 1/03596995:76:9:3

Start UTC_TIME : 1996-249 // 01:09:27.000
End UTC_TIME : 1996-249 // 01:19:34.000
Start SCLK : 1/03596985:86:9:3
Delta Time between FOV : 20.00000
FOVs : N/G Channel(0.1x1.0)

Target Body : JUPITER
Target Ra/Dec : 218.81/-14.02 Deg
S/C to Body Center : 2223642. Km (31.103368 Rj)
Z-axis Pointing (Ra / Dec) : 98.60 / 25.00 Deg

Activity ID: Orbit G2 OAPEL JUBFRDMP SeqNo 01-

Title Acetylene map buffer dump **Instrument** UVS

Requestor W. KENT TOBISKA **Team** UVS **Working Group** AWG

Time System CDS **Load ID** **Calendar Date** 09/06/96 Week 36

Start	GSE-CDS 00000077:00:0	96-250/19:53:44.667	GSE-000/01:17:51.333
End	GSE-CDS 00000074:00:0	96-250/19:56:46.667	GSE-000/01:14:49.333
Duration	00000003:00:0	000/00:03:02.000	000/00:03:02.000

Top Label G2JUBFRDMP01-

Bottom Label buffer dump

Plot Key UVS **Type** SCI

CDS Bytes 28 **Report Options** BOTH **Scan Platform** No

CDS Source OAP **Spin State** DUAL **DMS** Yes

Observation Objective

Buffer dump to tape for benefit of FPSG.

Design Detail

```
PSID  CDS RIM COMMAND PARAMETERS
384AN  00  00 COMMNT UVS RIM 0
411AA  28  00 BFRDUMP PAUSE_PB=FALSE,SLEW_DMS=FALSE,RESUME_PB=FALSE,PREV_RATE=R28
```

Activity ID:	**Orbit** G2	**OAPEL** JUACELAT		**SeqNo**	01-
Title	Acetylene/ammonia map			**Instrument**	UVS
Requestor	W. KENT TOBISKA	**Team**	UVS	**Working Group**	AWG

Time System	CDS	**Load ID**		**Calendar Date**	09/06/96 Week 36
Start	GSE+CDS 00000023:00:0	96-250/21:34:51.333		GSE+000/00:23:15.333	
End	GSE+CDS 00000063:00:0	96-250/22:15:18.000		GSE+000/01:03:42.000	
Duration	00000040:00:0	000/00:40:26.667		000/00:40:26.667	

Top Label	G2JUACELAT01-				
Bottom Label	recorded				
Plot Key	UVS	**Type**	SCI		
CDS Bytes	165	**Report Options**	BOTH	**Scan Platform**	Yes
CDS Source	OAP	**Spin State**	DUAL	**DMS**	Yes

Observation Objective

Acetylene and ammonia map along central meridian for latitudinal gradiant.

Recorded observation; F/G full scan on brightside. SITURN required for -Z axis RA/Dec = 95.975/47.995. Distance to Jupiter = 14.2 to 14.1 Rj.

Last cn/ck = 153/300.

[NOTE: RECORD 1 RIM AT START TO ACCOMMODATE 12 TICS OF NON-GUARANTEED DATA AT THE START OF TRACK 3; SELECT 32 RIMS FOR PBK AT 1:1 COMPRESSION = 1.96 MBTG + 0.07 MTBG AACS = 2.03 MBTG TOTAL.]

Design Detail

```
PSID   CDS  RIM  COMMAND PARAMETERS
384AM   00   00  COMMNT UVS RIM 0
175AB   18   03  SCIREC MODE_RATE = R7, DUR = 37:00:0
157AI   38   03  CMDRS   PLAN_DUR = 37 RIMS; EST_UVS_CMDS = 2
             04        1  34UVS/UVP:07,SCAN,NORM,NORM,NORM,SAME,0,ON,OFF,ON,ON,OFF,NOOVR,1,00,9C,01,2C
             40       37  34UVS/OFF:C1,FIXED,NORM,NORM,NORM,SAME,0,OFF,OFF,ON,OFF,OFF,NOOVR,1,2C,05,00,00
165AN   72   04  TARGET s/c subpt w/ cn/ck offset -83.0/-2.5 mrad (TMC ACTIVE)
                   (RA/Dec = TBD above north pole off planet)
117AC   37   04  CSMOS   PLAN_DUR = 36 RIMS (slew off S pole); cn_del_s=160.0; xcn_del_s=30.0
305AC   00   04  SELECT  INSTR = UVS2, COMPR = RICE, CMPR_DVSR = 1.0, CMPR_UNC = 0.0
300AC   00   36  DESELC  INSTR = UVS2
```

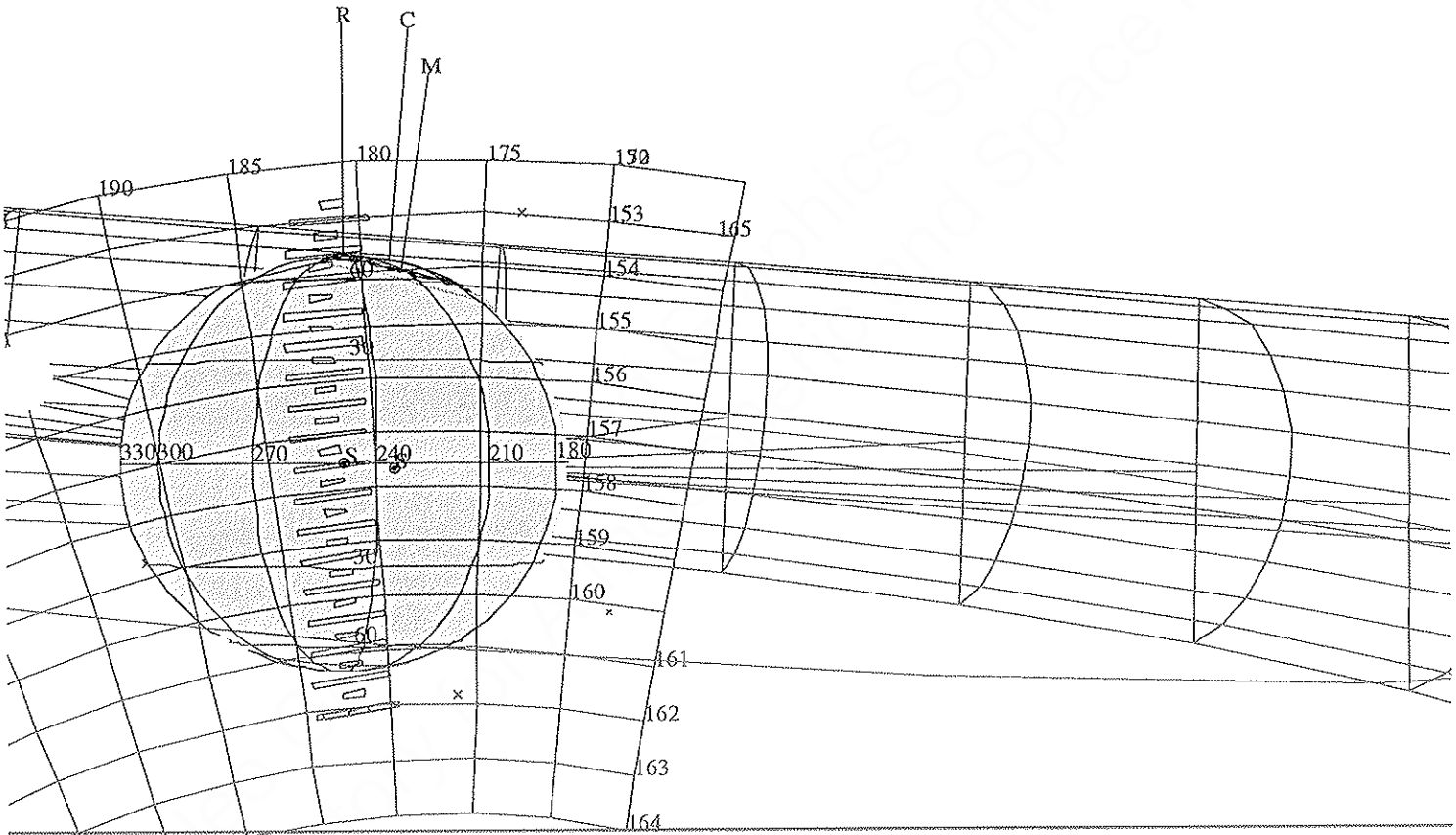

165AN:TT= 0 TMC= 1 C= -83.00 XC= -2.50 BS= 0/0990 TC= 3
A= 514 pD= 728 SR=17.430 RA50=276.41 DEC50=-20.75 cone=152.76 clock=181.05
117AC:#SB= 1 OR= 0.080 RR=12.000 BM=F RC= 1 BS= 0/0990
1:#s= 1 Cs= 160.00 XCs= 30.00 Cr= 0.00 XCr= 0.00 sD= 6544 rD= 2

ESIGN G1.0 kent : 7/12/1996 10:52:23

ILE:P.G2JUACELAT01

ENTRAL BODY:JUPITER III

INI:m.G2JUACELAT01

PH:/DATA/NAVIO/T-960628-TOUR.NS

ERIAPSIS: THINNING:NONE :UVS 1

TART:GSE 96-250/21:11:36.000 +CDS 27:00:0 BODY PLOT TIME:TARGET-TIME D= 728 S= 0.600

Sun Jul 14 22:46:25 1996

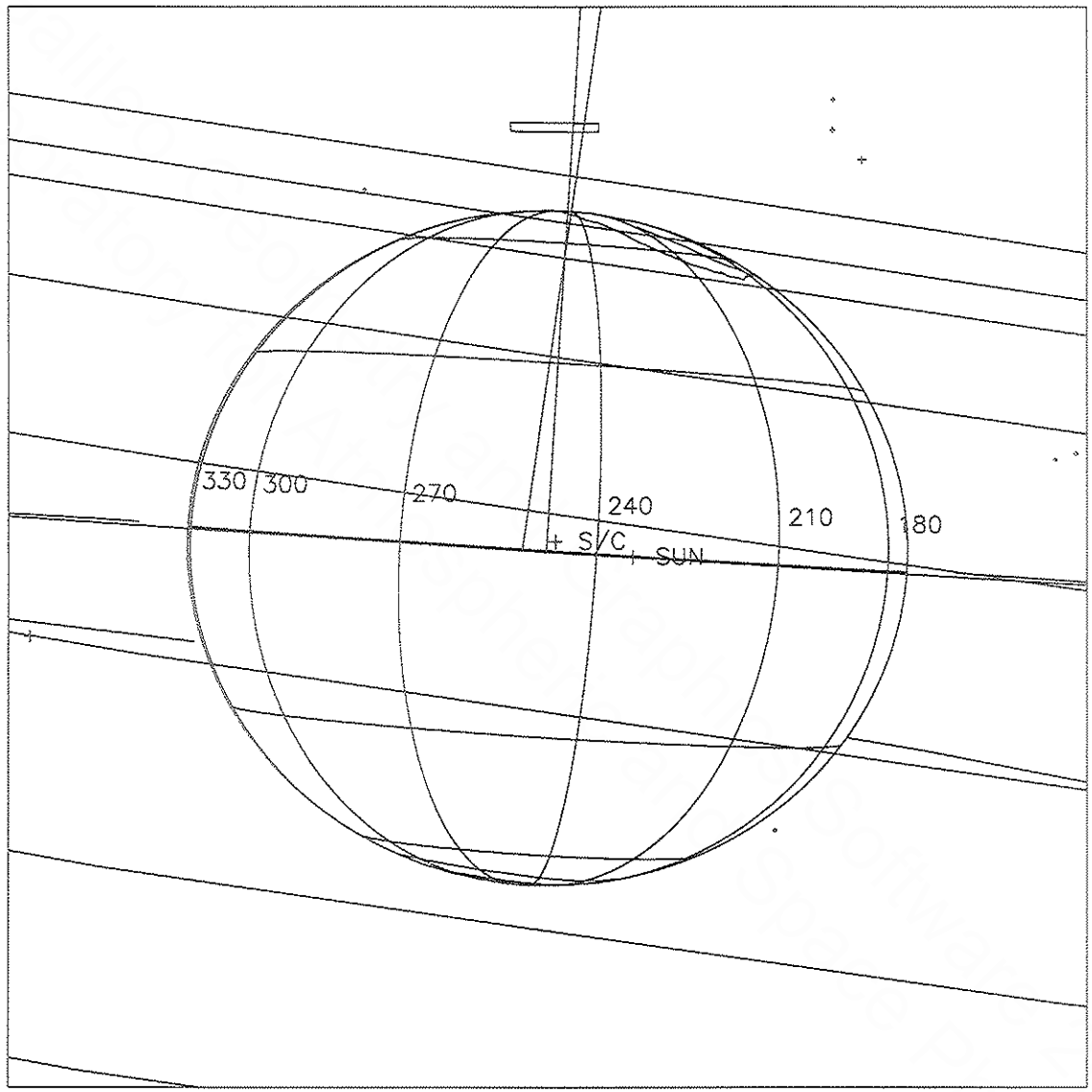

Start UTC_TIME : 1996-250 // 21:38:47.000
No End Time :
Start SCLK : 1/03599625:87:0:7

Target Body : JUPITER
Target Ra/Dec : 276.51/-25.51 Deg
S/C to Body Center : 1003545. Km (14.037171 Rj)
Z-axis Pointing (Ra / Dec) : 95.97 / 47.99 Deg

Sun Jul 14 22:50:26 1996

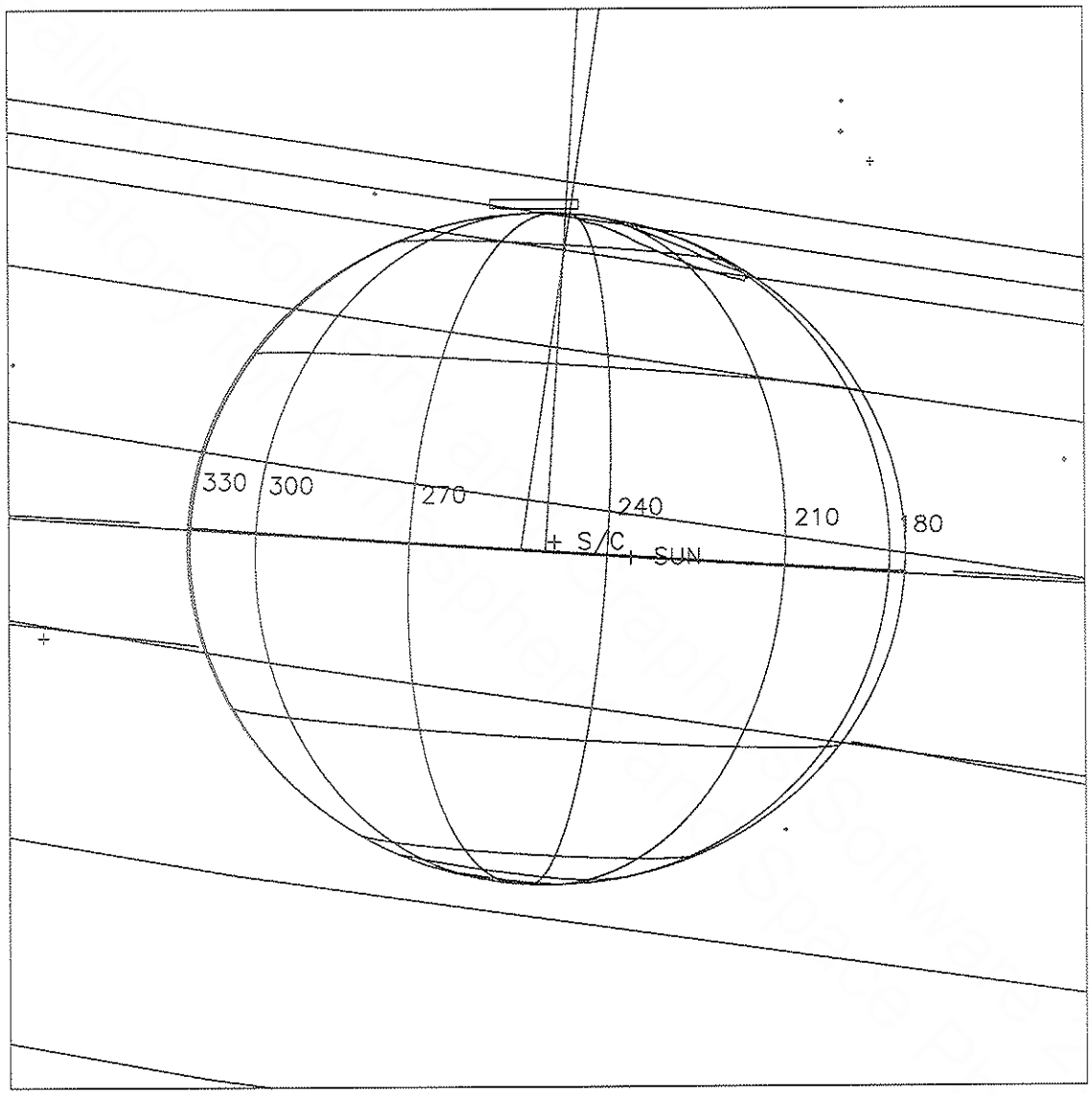

Start UTC_TIME : 1996-250 // 21:41:52.000
No End Time :
Start SCLK : 1/03599629:00:5:7

Target Body : JUPITER
Target Ra/Dec : 276.66/-25.50 Deg
S/C to Body Center : 1002253. Km (14.019099 Rj)
Z-axis Pointing (Ra / Dec) : 95.97 / 47.99 Deg

Sun Jul 14 22:49:23 1996

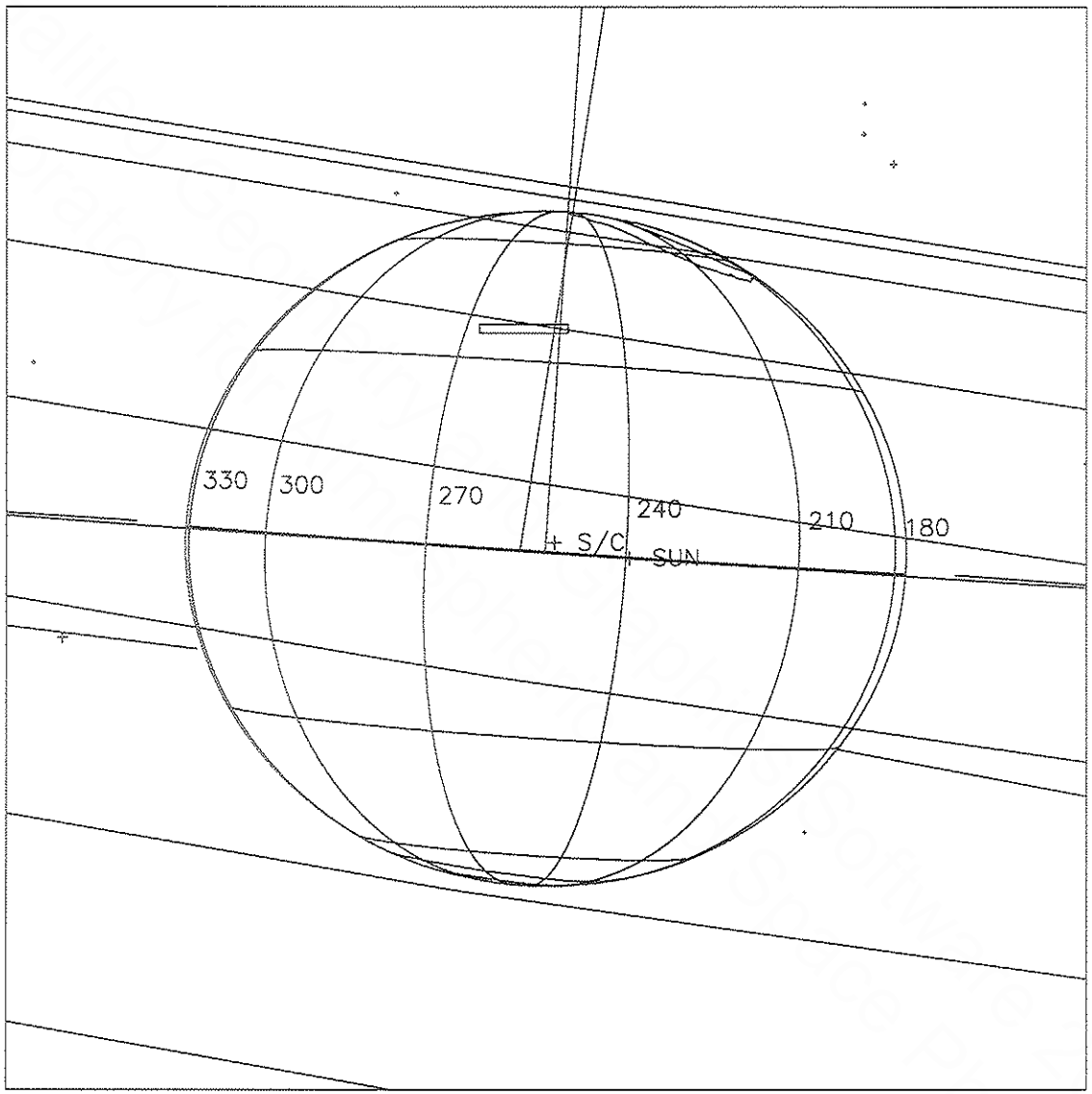

Start UTC_TIME : 1996-250 // 21:46:55.000
No End Time :
Start SCLK : 1/03599634:00:0:7

Target Body : JUPITER
Target Ra/Dec : 276.92/-25.49 Deg
S/C to Body Center : 1000141. Km (13.989554 Rj)
Z-axis Pointing (Ra / Dec) : 95.97 / 47.99 Deg

Sun Jul 14 22:51:40 1996

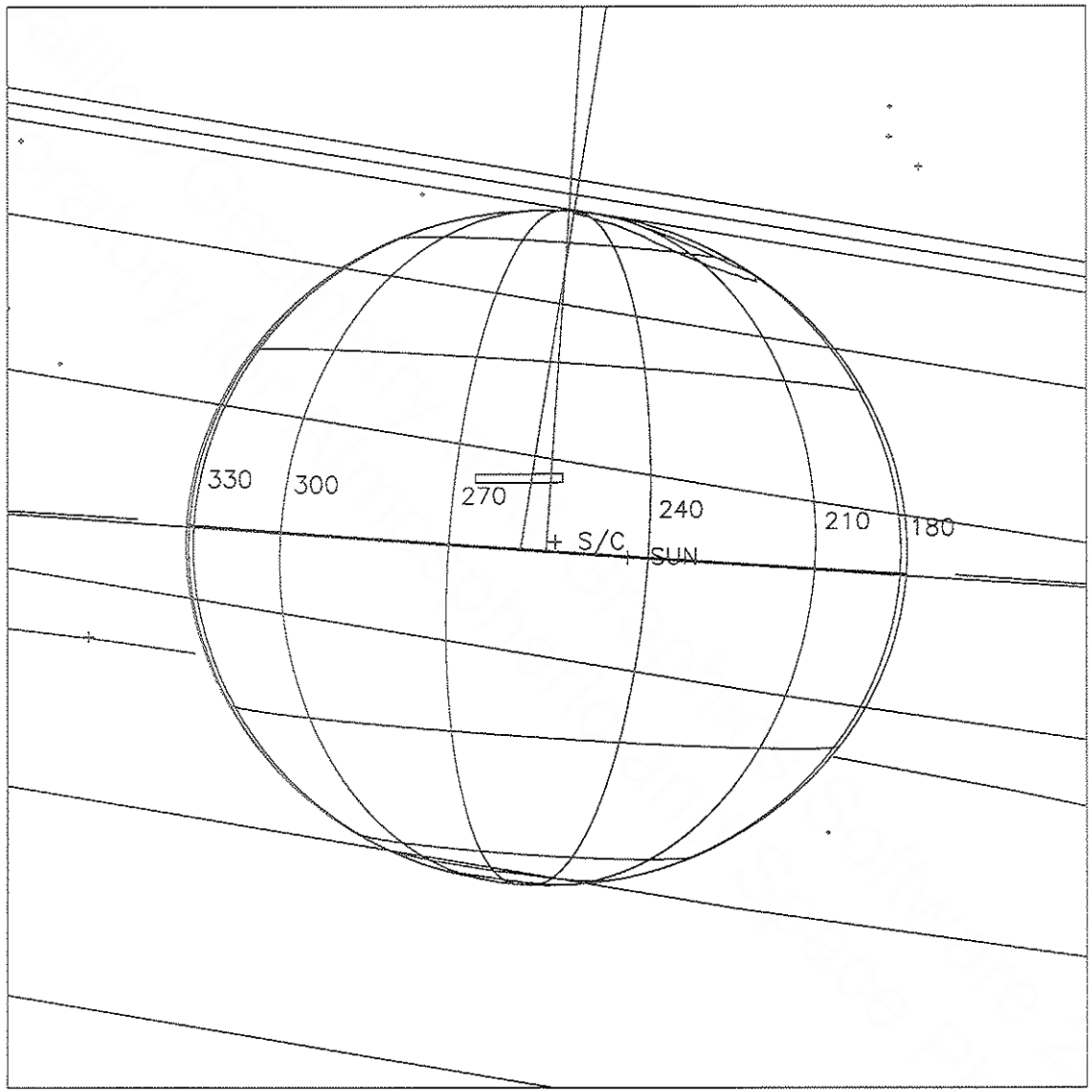

Start UTC_TIME : 1996-250 // 21:52:59.000
No End Time :
Start SCLK : 1/03599640:00:0:7

Target Body : JUPITER
Target Ra/Dec : 277.22/-25.47 Deg
S/C to Body Center : 997609.9 Km (13.954147 Rj)
Z-axis Pointing (Ra / Dec) : 95.97 / 47.99 Deg

Sun Jul 14 22:52:31 1996

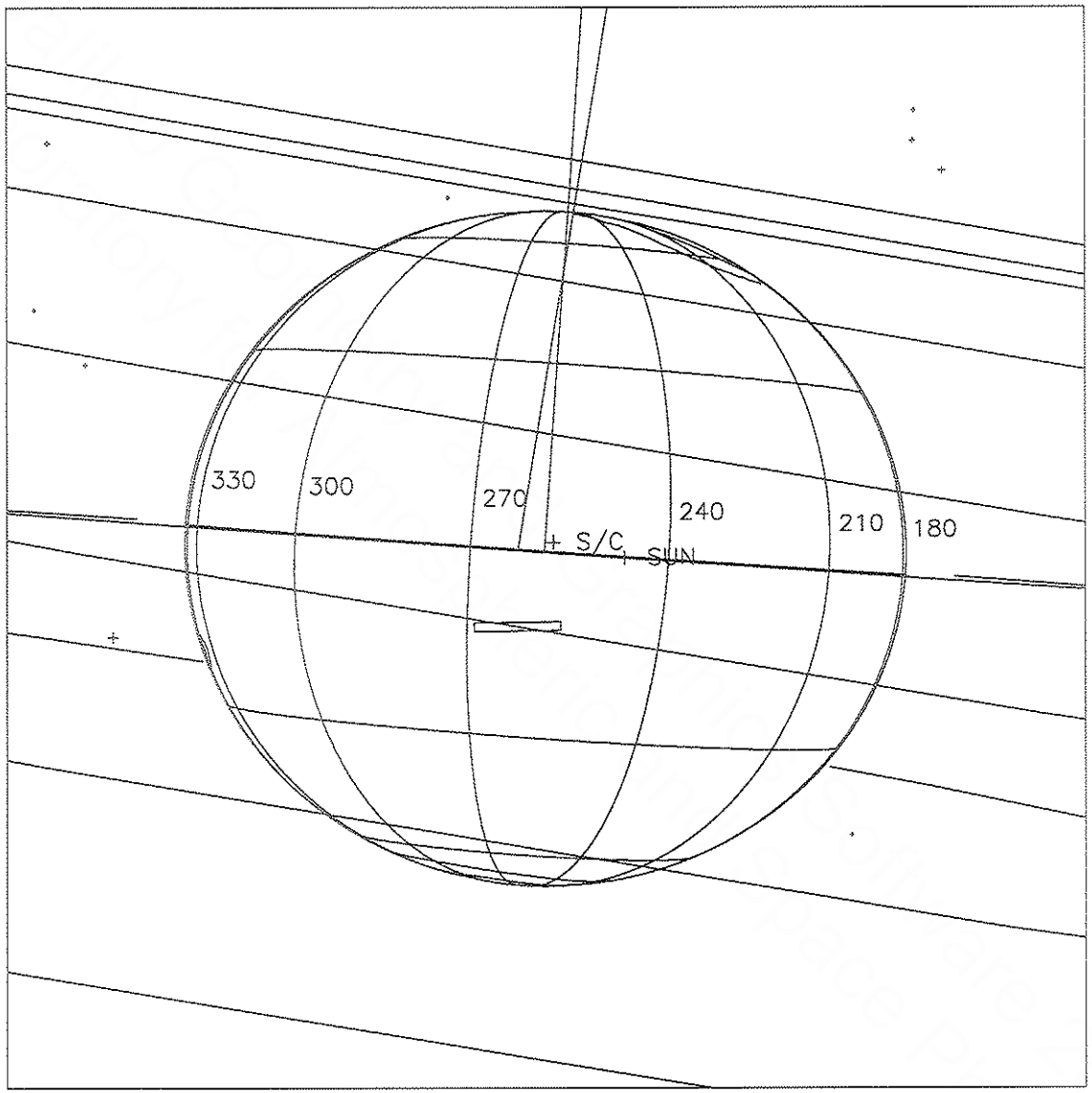

Start UTC_TIME : 1996-250 // 21:59:03.000
No End Time :
Start SCLK : 1/03599646:00:0:7

Target Body : JUPITER
Target Ra/Dec : 277.53/-25.45 Deg
S/C to Body Center : 995085.5 Km (13.918838 Rj)
Z-axis Pointing (Ra / Dec) : 95.97 / 47.99 Deg

Sun Jul 14 22:54:35 1996

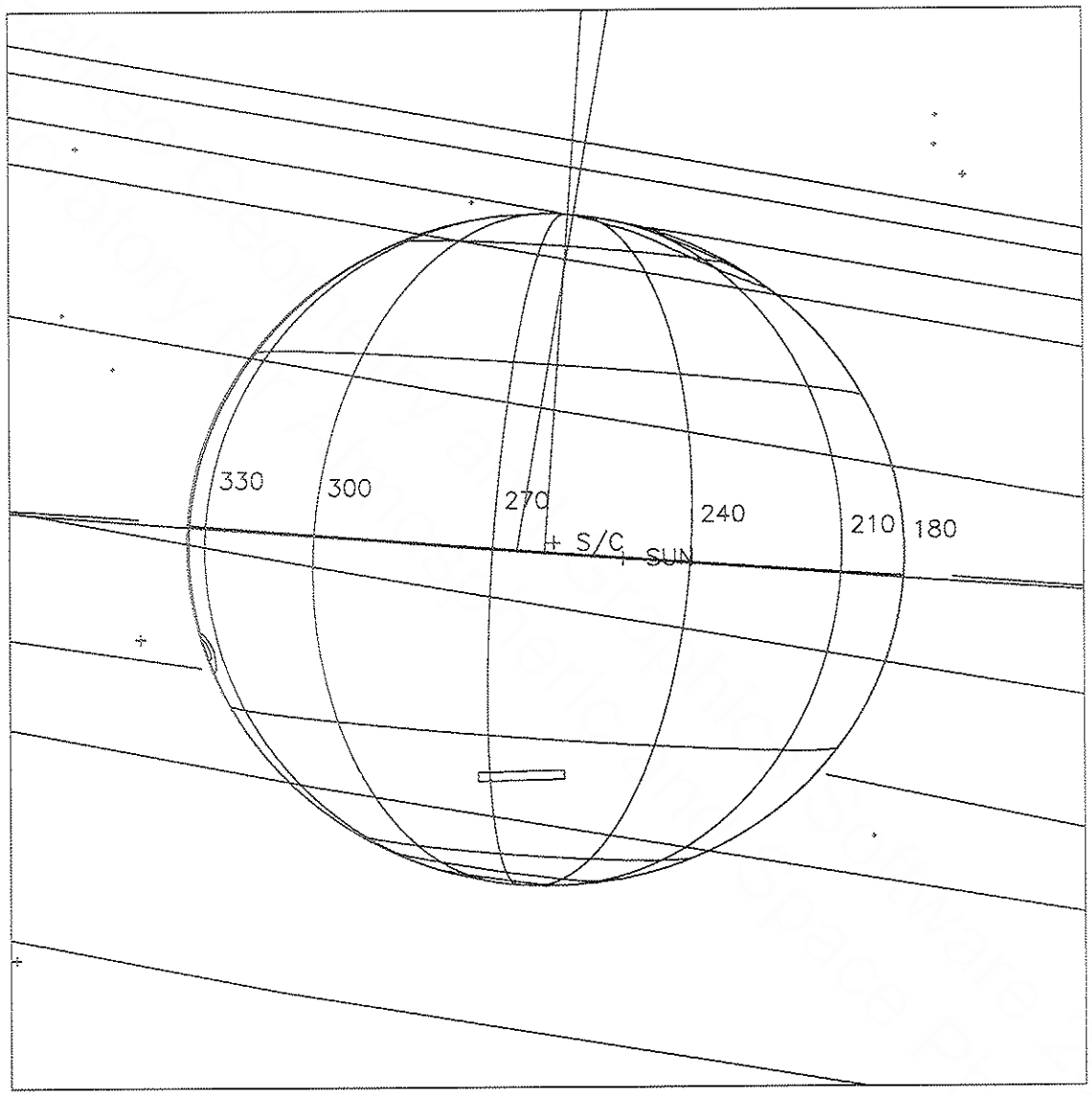

Start UTC_TIME : 1996-250 // 22:05:07.000
No End Time :
Start SCLK : 1/03599652:00:0:7

Target Body : JUPITER
Target Ra/Dec : 277.84/-25.44 Deg
S/C to Body Center : 992568.1 Km (13.883625 Rj)
Z-axis Pointing (Ra / Dec) : 95.97 / 47.99 Deg

Sun Jul 14 22:55:31 1996

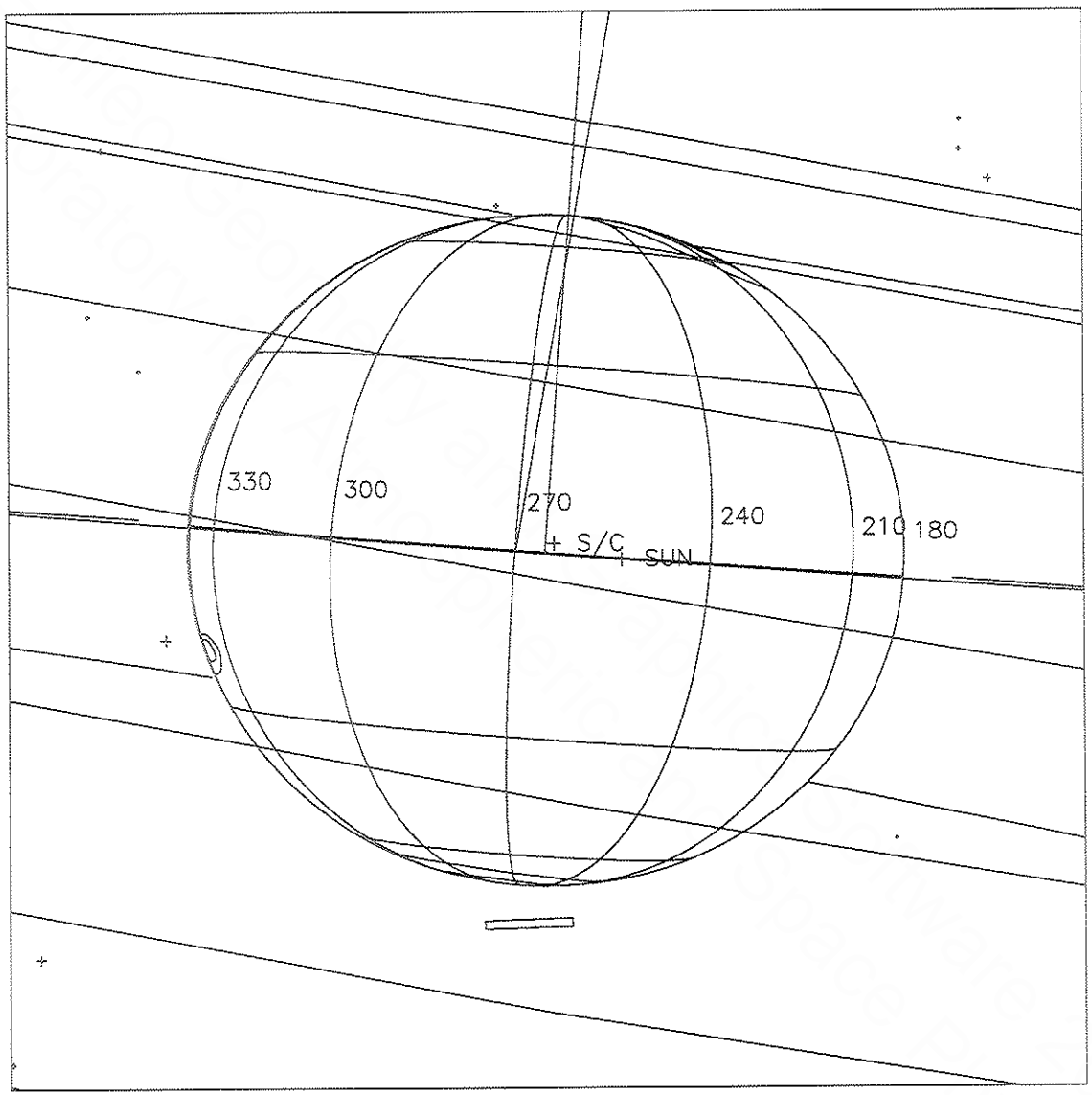

Start UTC_TIME : 1996-250 // 22:11:11.000
No End Time :
Start SCLK : 1/03599658:00:0:7

Target Body : JUPITER
Target Ra/Dec : 278.15/-25.42 Deg
S/C to Body Center : 990057.8 Km (13.848511 Rj)
Z-axis Pointing (Ra / Dec) : 95.97 / 47.99 Deg

Sun Jul 14 22:56:32 1996

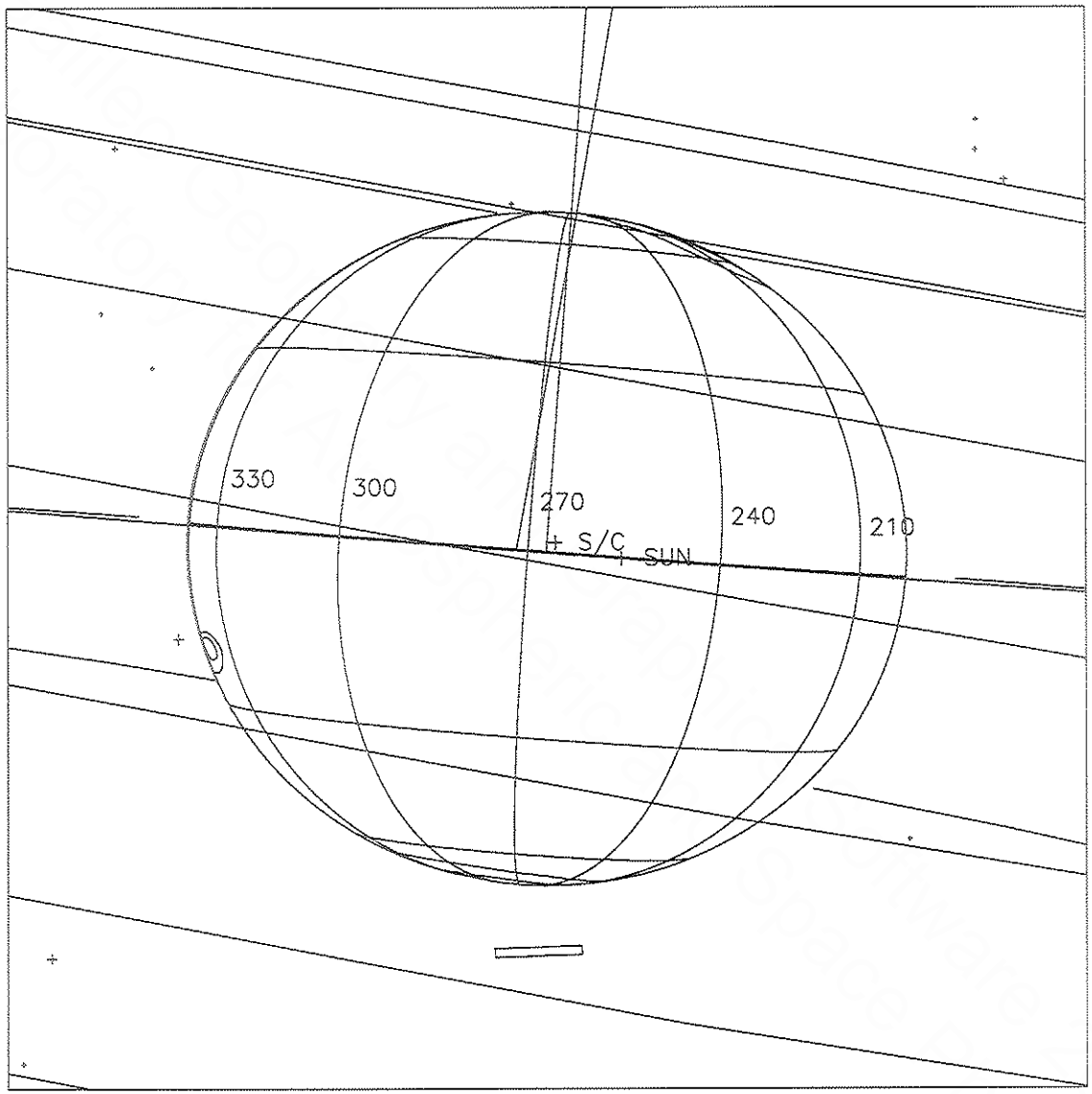

Start UTC_TIME : 1996-250 // 22:14:13.000
No End Time :
Start SCLK : 1/03599661:00:0:7

Target Body : JUPITER
Target Ra/Dec : 278.31/-25.41 Deg
S/C to Body Center : 988805.3 Km (13.830992 Rj)
Z-axis Pointing (Ra / Dec) : 95.97 / 47.99 Deg

Activity ID: Orbit G2 OAPEL JUBFRDMP **SeqNo** 03-

Title Acetylene map buffer dump **Instrument** UVS

Requestor W. KENT TOBISKA **Team** UVS **Working Group** AWG

Time System CDS **Load ID** G2A **Calendar Date** 09/06/96 **Week** 36

Start	GSE+CDS 00000088:00:0	96-250/22:40:34.666	GSE+000/01:28:58.666
End	GSE+CDS 00000091:00:0	96-250/22:43:36.666	GSE+000/01:32:00.666
Duration	00000003:00:0	000/00:03:02.000	000/00:03:02.000

Top Label G2JUBFRDMP03-

Bottom Label buffer dump

Plot Key	UVS	**Type**	SCI		
CDS Bytes	28	**Report Options**	BOTH	**Scan Platform**	No
CDS Source	OAP	**Spin State**	DUAL	**DMS**	Yes

Observation Objective

Buffer dump to tape for benefit of FPSG.

Design Detail

```
PSID  CDS RIM COMMAND PARAMETERS
384AP  00   00 COMMNT UVS RIM 0
411AC  28   00 BFRDUMP PAUSE_PB=FALSE,SLEW_DMS=FALSE,RESUME_PB=FALSE
```