Activity ID: Orbit G2 OAPEL EUPHAS79 SeqNo 01-

Title UVS EUROPA PHASE (~79 deg) **Instrument** UVS

Requestor UVS-SWG/K.NAVIAUX 37740 **Team** UVS **Working Group** SWG

Time System CDS **Load ID** G2A **Calendar Date** 09/03/96 **Week** 36

Start	GEE-CDS 4361:00:0	96-247/17:30:42.000	GEE-003/01:29:27.333
End	GEE-CDS 4297:00:0	96-247/18:35:24.667	GEE-003/00:24:44.666
Duration	00000064:00:0	000/01:04:42.667	000/01:04:42.667

Top Label G2EUPHAS7901-

Bottom Label (real-time)

Plot Key	UVS	**Type**	SCI		
CDS Bytes	250	**Report Options**	BOTH	**Scan Platform**	Yes
CDS Source	PA	**Spin State**	DUAL	**DMS**	No

Observation Objective

Observe Europa in the 1600Å to 3200Å wavelength regions at phase angles not obtainable from the Earth to supplement and complement the NIMS surface property measurements. 2 scan-platform drifts across Europa in real-time at ~79° phase (~353-356 longitude ; 27 RIM 3-sigma drift rate) using the UVS 10bps RTS rate. Each drift will include 20 RIMs HV On / 10 RIMs HV Off for PWS time sharing. Therefore, only 20 RIMs of the 27 RIM 3-sigma drift rate is covered in each drift. UVS Configuration = F/F Full Scans

Design Detail

```
CDS RIM Command Parameters
--- --- -------- ----------
 28 003+UVFLUSH DISCRD,UVS
 36 004 TARGET  (4 RIM Posn_Slew)
 66 003 CMDRS
    004      1   34UVS,07,S,N,N,N,S,0,  ON,OFF,  ON,  ON,OFF,NOOVR,1,00,9C,00,00
    024     21   34UVS,C1,F,N,N,N,S,0,OFF,OFF,  ON,OFF,OFF,NOOVR,1,2C,05,00,00
    034     31   34UVS,07,S,N,N,N,S,0,  ON,OFF,  ON,  ON,OFF,NOOVR,1,00,9C,00,00
    054     51   34UVS,C1,F,N,N,N,S,0,OFF,OFF,  ON,OFF,OFF,NOOVR,1,2C,05,00,00
 36 034 TARGET  (1 RIM Posn_Slew)
 28   023+UVFLUSH PACKET UVS
 28   033+UVFLUSH,DISCRD UVS
 28   053+UVFLUSH PACKET UVS
```

Frame : 0

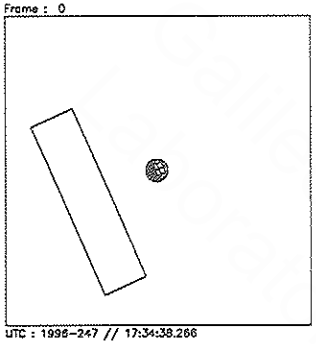

UTC : 1996-247 // 17:34:38.266
SCLK: 1/03595111:87:7:2

Frame : 1

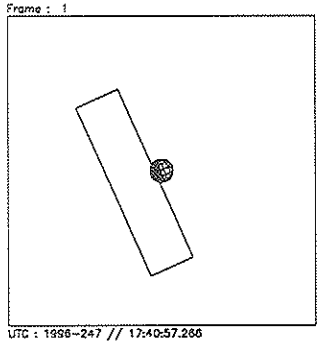

UTC : 1996-247 // 17:40:57.266
SCLK: 1/03595118:19:2:2

Frame : 2

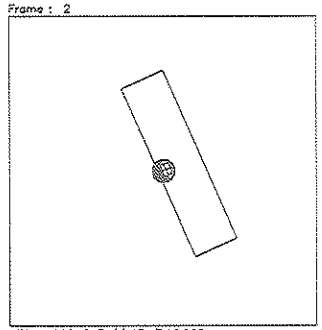

UTC : 1996-247 // 17:47:16.266
SCLK: 1/03595124:41:7:2

Frame : 3

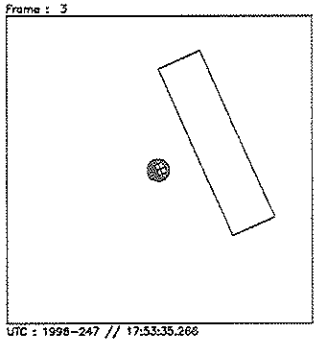

UTC : 1996-247 // 17:53:35.266
SCLK: 1/03595130:64:2:2

packet @ 17:54:48

Frame : 4

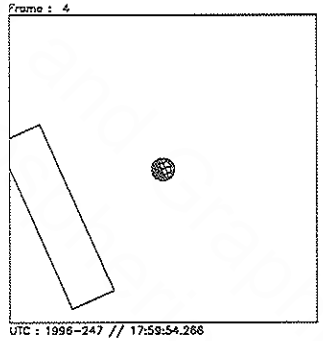

UTC : 1996-247 // 17:59:54.266
SCLK: 1/03595136:86:7:2

Frame : 5

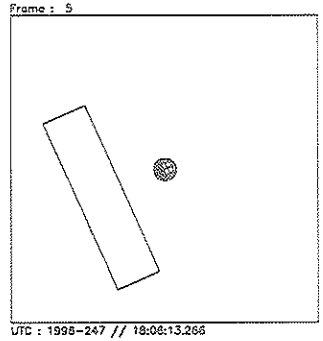

UTC : 1996-247 // 18:06:13.266
SCLK: 1/03595143:18:2:2

Frame : 6

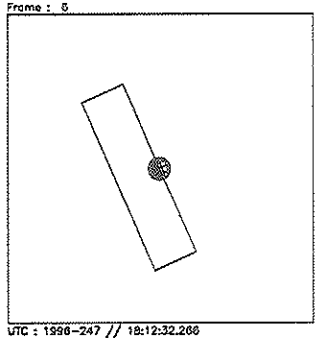

UTC : 1996-247 // 18:12:32.266
SCLK: 1/03595149:40:7:2

Frame : 7

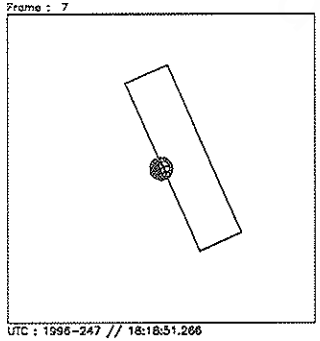

UTC : 1996-247 // 18:18:51.266
SCLK: 1/03595155:63:2:2

packet @ 18:25:08

Frame : 8

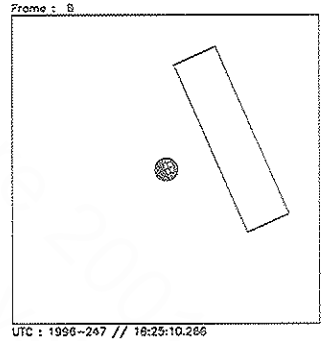

UTC : 1996-247 // 18:25:10.266
SCLK: 1/03595161:85:7:2

Start UTC_TIME : 1996-247 // 17:34:38.266
End UTC_TIME : 1996-247 // 18:25:11.266
Start SCLK : 1/03595111:87:7:2
Delta Time between FOV : 379.0000
FOVs : F Channel(0.1x0.4)

Target Body : EUROPA
Target Cone/Clock : 105.93/ 90.37 Deg
S/C to Body Center : 3624746. Km (2316.1314 Re)
Z-axis Pointing (Ra / Dec) : 98.60 / 25.00 Deg

Activity ID: Orbit G2 **OAPEL** EUPHAS60 **SeqNo** 01-

Title UVS EUROPA PHASE (~60 deg) **Instrument** UVS

Requestor UVS-SWG/K.NAVIAUX 37740 **Team** UVS **Working Group** SWG

Time System CDS **Load ID** G2A **Calendar Date** 09/04/96 **Week** 36

Start	GEE-CDS 3146:00:0	96-248/13:59:12.000	GEE-002/05:00:57.333
End	GEE-CDS 3082:00:0	96-248/15:03:54.667	GEE-002/03:56:14.666
Duration	00000064:00:0	000/01:04:42.667	000/01:04:42.667

Top Label G2EUPHAS6001-

Bottom Label (real-time)

Plot Key	UVS	**Type**	SCI		
CDS Bytes	250	**Report Options**	BOTH	**Scan Platform**	Yes
CDS Source	PA	**Spin State**	DUAL	**DMS**	No

Observation Objective

Observe Europa in the 1600Å to 3200Å wavelength regions at phase angles not obtainable from the Earth to supplement and complement the NIMS surface property measurements. 2 scan-platform drifts across Europa in real-time at ~60° phase (~45-48 longitude ; 27 RIM 3-sigma drift rate) using the UVS 10bps RTS rate. Each drift will include 20 RIMs HV On / 10 RIMs HV Off for PWS time sharing. Therefore, only 20 RIMs of the 27 RIM 3-sigma drift rate is covered in each drift. UVS Configuration = F/F Full Scans

Design Detail

```
CDS RIM Command Parameters
--- --- -------- ----------
 28 003+UVFLUSH DISCRD,UVS
 36 004 TARGET  (4 RIM Posn_Slew)
 66 003 CMDRS
    004       1  34UVS,07,S,N,N,N,S,0,  ON,OFF,  ON,  ON,OFF,NOOVR,1,00,9C,00,00
    024      21  34UVS,C1,F,N,N,N,S,0,OFF,OFF,  ON,OFF,OFF,NOOVR,1,2C,05,00,00
    034      31  34UVS,07,S,N,N,N,S,0,  ON,OFF,  ON,  ON,OFF,NOOVR,1,00,9C,00,00
    054      51  34UVS,C1,F,N,N,N,S,0,OFF,OFF,  ON,OFF,OFF,NOOVR,1,2C,05,00,00
 36 034 TARGET  (1 RIM Posn_Slew)
 28   023+UVFLUSH,PACKET UVS
 28   033+UVFLUSH,DISCRD UVS
 28   053+UVFLUSH,PACKET UVS
```

Frame : 0

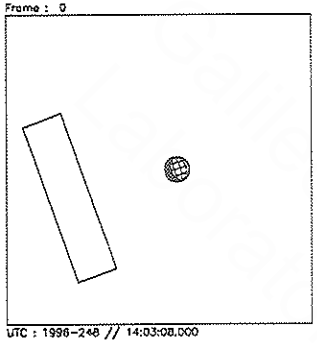

UTC : 1996-248 // 14:03:08.000
SCLK: 1/03596328:87:4:0

Frame : 1

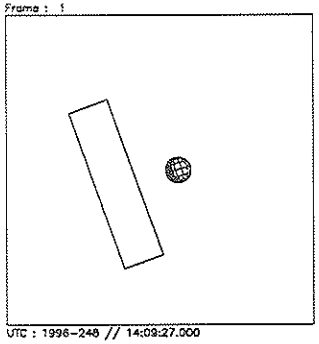

UTC : 1996-248 // 14:09:27.000
SCLK: 1/03596333:18:9:0

Frame : 2

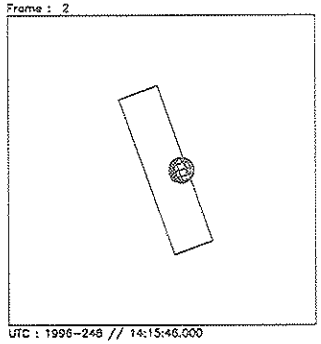

UTC : 1996-248 // 14:15:46.000
SCLK: 1/03596339:41:4:0

Frame : 3

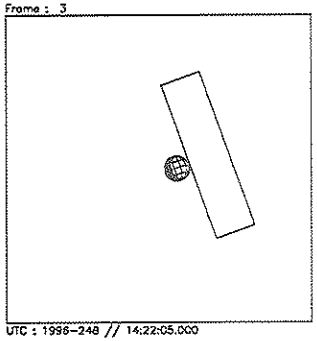

UTC : 1996-248 // 14:22:05.000
SCLK: 1/03596345:63:9:0

Frame : 4

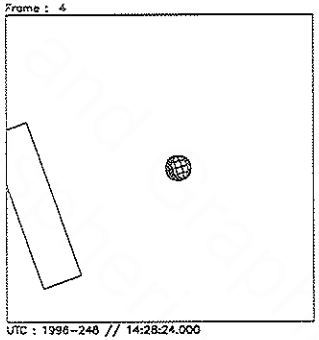

UTC : 1996-248 // 14:28:24.000
SCLK: 1/03596351:88:4:0

Frame : 5

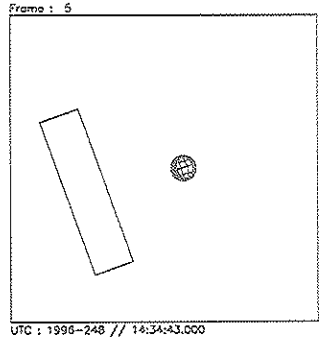

UTC : 1996-248 // 14:34:43.000
SCLK: 1/03596358:17:9:0

Frame : 6

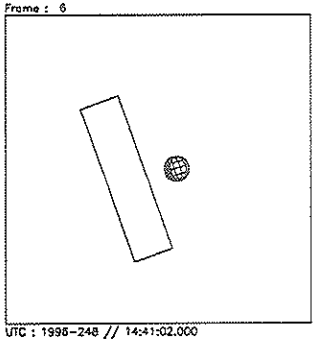

UTC : 1996-248 // 14:41:02.000
SCLK: 1/03596364:40:4:0

Frame : 7

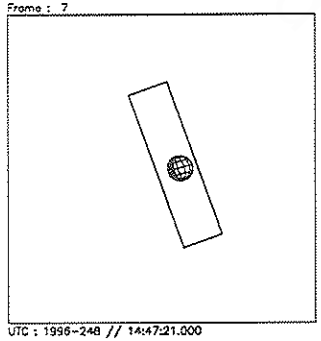

UTC : 1996-248 // 14:47:21.000
SCLK: 1/03596370:82:9:0

Frame : 8

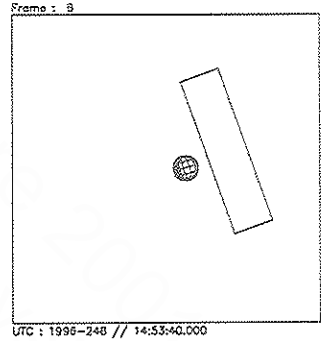

UTC : 1996-248 // 14:53:40.000
SCLK: 1/03596376:85:4:0

Start UTC_TIME : 1996-248 // 14:03:08.000
End UTC_TIME : 1996-248 // 14:53:41.000
Start SCLK : 1/03596326:87:4:0
Delta Time between FOV : 379.0000
FOVs : F Channel(0.1x0.4)

Target Body : EUROPA
Target Cone/Clock : 128.38/ 90.97 Deg
S/C to Body Center : 2939508. Km (1878.2800 Re)
Z-axis Pointing (Ra / Dec) : 98.60 / 25.00 Deg

Activity ID:	Orbit G2	OAPEL EUPHAS43		SeqNo 01-	
Title	UVS EUROPA PHASE (~43 deg)			**Instrument**	UVS
Requestor	UVS-SWG/K.NAVIAUX 37740	**Team**	UVS	**Working Group**	SWG

Time System	CDS	**Load ID**	G2A	**Calendar Date**	09/05/96	Week	36

Start	GEE-CDS 1871:00:0	96-249/11:28:22.000	GEE-001/07:31:47.333
End	GEE-CDS 1817:00:0	96-249/12:22:58.000	GEE-001/06:37:11.333
Duration	00000054:00:0	000/00:54:36.000	000/00:54:36.000

Top Label	G2EUPHAS4301-				
Bottom Label	(real-time)				
Plot Key	UVS	**Type**	SCI		
CDS Bytes	120	**Report Options**	BOTH	**Scan Platform**	Yes
CDS Source	PA	**Spin State**	DUAL	**DMS**	No

Observation Objective

Observe Europa in the 1600Å to 3200Å wavelength regions at phase angles not obtainable from the Earth to supplement and complement the NIMS surface property measurements. 1 50 RIM scan-platform drift across Europa in real-time at ~43° phase (~116-120 longitude). UVS Configuration = F/F Full Scans

Design Detail

```
CDS RIM Command Parameters
--- --- -------- ----------
 28 003+UVFLUSH DISCRD,UVS
 28 003 CMDRS
    004      1   34UVS,07,S,N,N,N,S,0,  ON,OFF,  ON,  ON,OFF,NOOVR,1,00,9C,00,00
    054     51   34UVS,C1,F,N,N,N,S,0,OFF,OFF,  ON,OFF,OFF,NOOVR,1,2C,05,00,00
 36 004 TARGET  (4 RIM Posn_Slew)
 28 053+UVFLUSH PACKET, UVS
```

Frame : 0

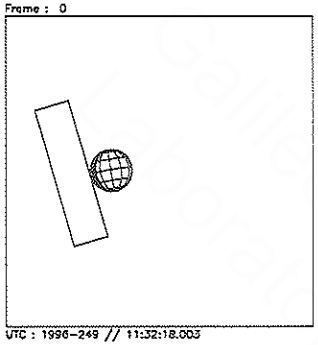

UTC : 1996-249 // 11:32:18.003
SCLK: 1/03597601:87:4:6

Frame : 1

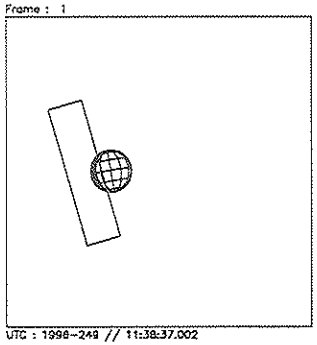

UTC : 1996-249 // 11:38:37.002
SCLK: 1/03597606:18:9:6

Frame : 2

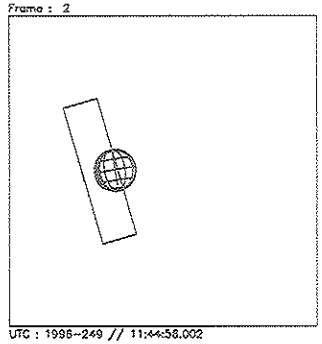

UTC : 1996-249 // 11:44:56.002
SCLK: 1/03597614:41:4:6

Frame : 3

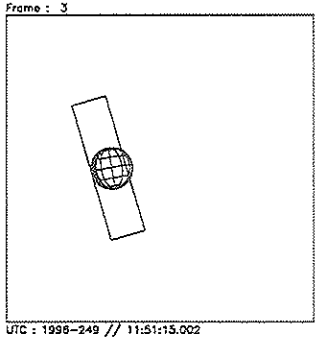

UTC : 1996-249 // 11:51:15.002
SCLK: 1/03597620:83:9:6

Frame : 4

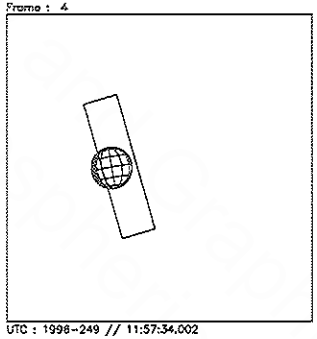

UTC : 1996-249 // 11:57:34.002
SCLK: 1/03597626:86:4:6

Frame : 5

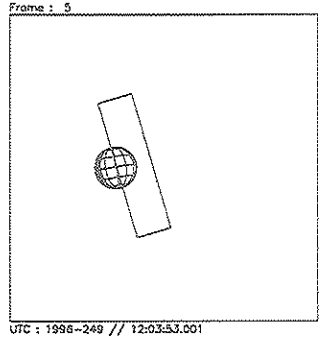

UTC : 1996-249 // 12:03:53.001
SCLK: 1/03597633:17:9:6

Frame : 6

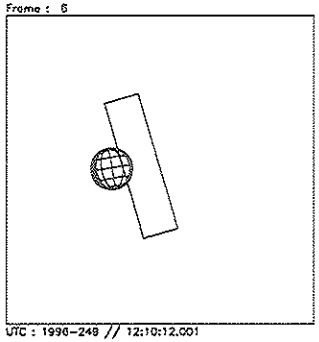

UTC : 1996-249 // 12:10:12.001
SCLK: 1/03597639:40:4:6

Frame : 7

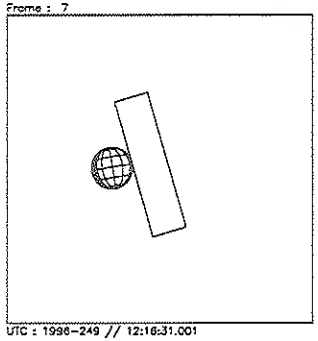

UTC : 1996-249 // 12:16:31.001
SCLK: 1/03597645:62:9:6

@ packet @ 12:22:48

Frame : 8

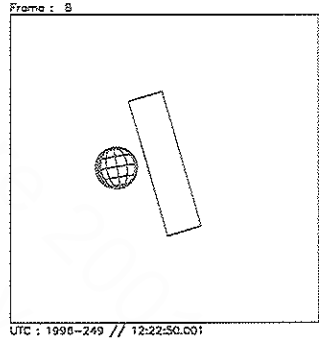

UTC : 1996-249 // 12:22:50.001
SCLK: 1/03597651:85:4:6

Start UTC_TIME : 1996-249 // 11:32:18.000
No End Time :
Start SCLK : 1/03597601:87:4:6

Target Body : EUROPA
Target Ra/Dec : 243.46/-19.84 Deg
S/C to Body Center : 1559542. Km (996.51222 Re)
Z-axis Pointing (Ra / Dec) : 98.60 / 25.00 Deg

Activity ID:	Orbit G2	**OAPEL**	EUPHAS58	**SeqNo**	01-
Title	UVS EUROPA PHASE (~58 deg)			**Instrument**	UVS
Requestor	UVS-SWG/K.NAVIAUX 37740	**Team**	UVS	**Working Group**	SWG

Time System	CDS	**Load ID**	G2A	**Calendar Date**	09/06/96	Week	36

Start	GEE-CDS 607:00:0	96-250/08:46:24.667	GEE-000/10:13:44.666
End	GEE-CDS 557:00:0	96-250/09:36:58.000	GEE-000/09:23:11.333
Duration	00000050:00:0	000/00:50:33.333	000/00:50:33.333

Top Label	G2EUPHAS5801-				
Bottom Label	(real-time)				
Plot Key	UVS	**Type**	SCI		
CDS Bytes	130	**Report Options**	BOTH	**Scan Platform**	Yes
CDS Source	PA	**Spin State**	DUAL	**DMS**	No

Observation Objective

Observe Europa in the 1600Å to 3200Å wavelength regions at phase angles not obtainable from the Earth to supplement and complement the NIMS surface property measurements. 1 scan-platform drift across Europa in real-time at ~58° phase (~223-228 Longitude ; 44 RIM 3-sigma drift rate) using the UVS 10bps RTS rate. The one drift will include 44 RIMs HV On / 16 RIMs HV Off for PWS time sharing. Therefore, all 44 RIMs of the 44 RIM 3-sigma drift rate is covered. UVS Configuration = F/F Full Scans

Design Detail

```
CDS RIM Command Parameters
--- --- --------- ----------
 28 003 +UVFLUSH DISCRD,UVS
 38 003 CMDRS
    004      1    34UVS,07,S,N,N,N,S,0,  ON,OFF,  ON,  ON,OFF,NOOVR,1,00,9C,00,00
    049     45    34UVS,C1,F,N,N,N,S,0,OFF,OFF,  ON,OFF,OFF,NOOVR,1,2C,05,00,00
 36 004 TARGET  (4 RIM Posn_Slew)
 28 048 +UVFLUSH PACKET UVS
```

Frame : 0

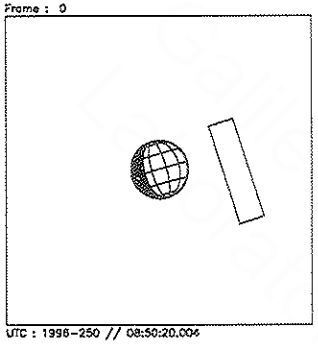

UTC : 1996-250 // 08:50:20.004
SCLK: 1/03598865:86:5:4

Frame : 1

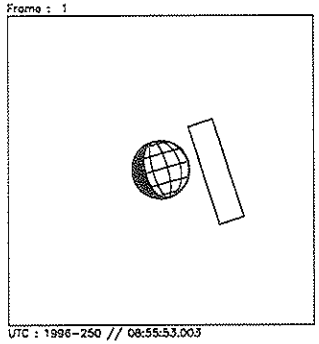

UTC : 1996-250 // 08:55:53.003
SCLK: 1/03598871:40:0:4

Frame : 2

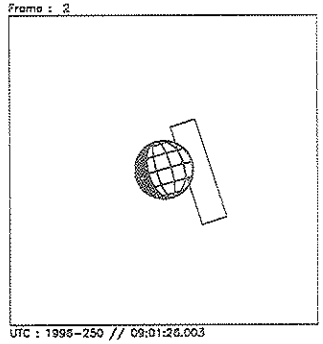

UTC : 1996-250 // 09:01:26.003
SCLK: 1/03598876:84:5:4

Frame : 3

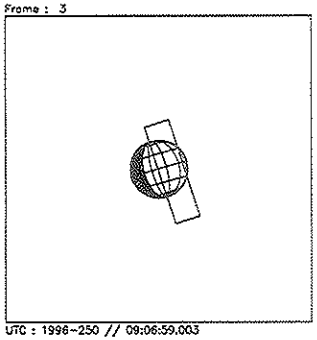

UTC : 1996-250 // 09:06:59.003
SCLK: 1/03598882:38:0:4

Frame : 4

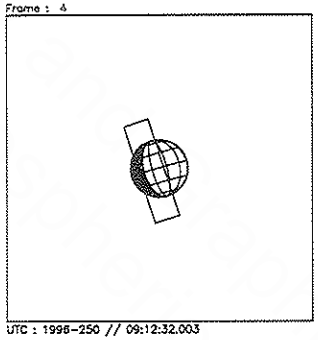

UTC : 1996-250 // 09:12:32.003
SCLK: 1/03598887:82:5:4

Frame : 5

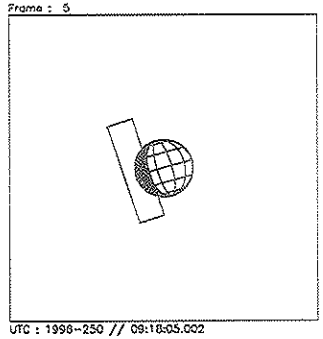

UTC : 1996-250 // 09:18:05.002
SCLK: 1/03598893:36:0:4

Frame : 6

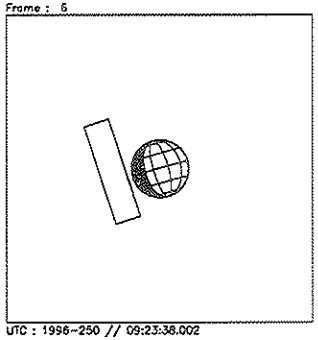

UTC : 1996-250 // 09:23:38.002
SCLK: 1/03598898:80:5:4

Frame : 7

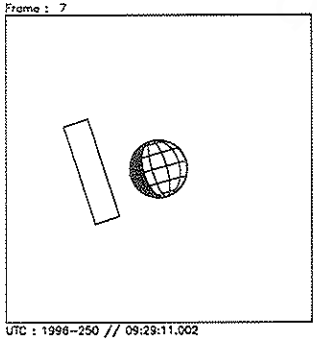

UTC : 1996-250 // 09:29:11.002
SCLK: 1/03598904:34:0:4

Frame : 8

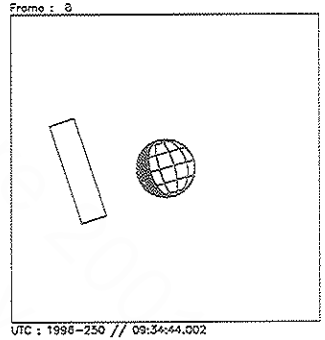

UTC : 1998-250 // 09:34:44.002
SCLK: 1/03598909:78:5:4

packet @ 9:34:46

Start UTC_TIME : 1996-250 // 08:50:20.000
No End Time :
Start SCLK : 1/03598865:86:5:4

Target Body : EUROPA
Target Ra/Dec : 227.26/-17.93 Deg
S/C to Body Center : 791767.1 Km (505.92144 Re)
Z-axis Pointing (Ra / Dec) : 98.60 / 25.00 Deg

Activity ID: Orbit G2 **OAPEL** IUNTRLCL **SeqNo** 01-

Title UVS IO NEUTRAL CLOUD **Instrument** UVS

Requestor UVS-SWG/K.NAVIAUX 37740 **Team** UVS **Working Group** SWG

Time System CDS **Load ID** G2A **Calendar Date** 09/06/96 **Week** 36

Start	GTE-CDS 415:00:0	96-250/12:00:32.667	GTE-000/06:59:36.666
End	GTE-CDS 171:00:0	96-250/16:07:15.333	GTE-000/02:52:54.000
Duration	00000244:00:0	000/04:06:42.666	000/04:06:42.666

Top Label G2IUNTRLCL01-

Bottom Label (real-time)

Plot Key	UVS	**Type**	SCI		
CDS Bytes	294	**Report Options**	BOTH	**Scan Platform**	Yes
CDS Source	PA	**Spin State**	DUAL	**DMS**	No

Observation Objective

~4 hour UVS real-time Io Neutral Cloud observation. Determine the composition and time variation of the ionized Io neutral cloud (SO2, SO, O, S, K, Na) to assist in the modeling of the Io plasma torus and Io atmosphere. Target s/p ~100000km off the satellite surface and allow s/c motion to drift the FOV onto Io over a ~240 RIM period. 50/50 observation time sharing w/PWS. UVS Configuration = 1/2 22-step 2-posn on 1356/1479 = 1/2 1-step 2-posn on 1356/1339Å = F/G Full Scans while on Io

Design Detail

```
CDS RIM Command Parameter
--- --- ------- ---------
 56 002 OPTRTM   UVS = 'SELECT'
 28 003+UVFLUSH DISCRD,UVS
136 003 CMDRS
    004       1 34UVS,D3,F,N,N,N,S,0,OFF,OFF,  ON,  ON,OFF,NOOVR,1,B3,4D,00,51    1356/1479
    034      31 34UVS,C1,F,N,N,N,S,0,OFF,OFF,  ON,  ON,OFF,NOOVR,1,BE,05,04,0B    1356/1339
    064      61 34UVS,D3,F,N,N,N,S,0,OFF,OFF,  ON,  ON,OFF,NOOVR,1,B3,4D,00,51    1356/1479
    094      91 34UVS,C1,F,N,N,N,S,0,OFF,OFF,  ON,  ON,OFF,NOOVR,1,BE,05,04,0B    1356/1339
    124     121 34UVS,D3,F,N,N,N,S,0,OFF,OFF,  ON,  ON,OFF,NOOVR,1,B3,4D,00,51    1356/1479
    154     151 34UVS,C1,F,N,N,N,S,0,OFF,OFF,  ON,  ON,OFF,NOOVR,1,BE,05,04,0B    1356/1339
    184     181 34UVS,07,S,N,N,N,S,0,  ON,OFF,  ON,  ON,OFF,NOOVR,1,00,9C,01,2C    F/G Full
    214     211 34UVS,C1,F,N,N,N,S,0,OFF,OFF,  ON,  ON,OFF,NOOVR,1,BE,05,04,0B    1356/1339
    244     241 34UVS,C1,F,N,N,N,S,0,OFF,OFF,  ON,OFF,OFF,NOOVR,1,2C,05,00,00    HV Off
 36 004 TARGET  (4 RIM Posn_Slew)
 38 244 OPTRTM  UVS = 'EXCLUDE'
```

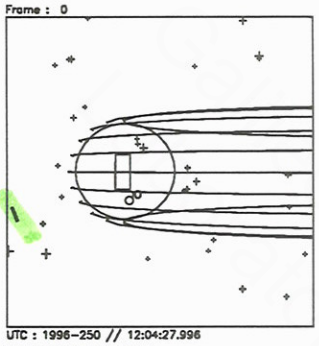

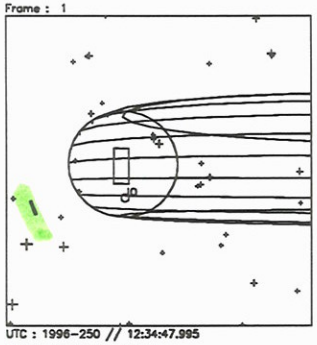

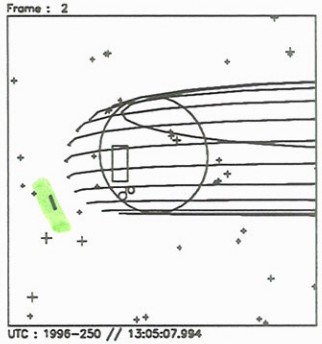

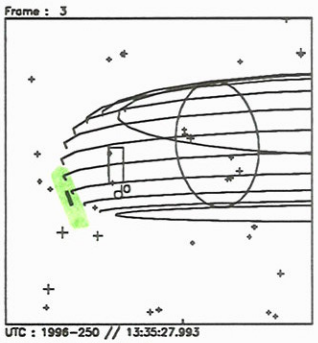

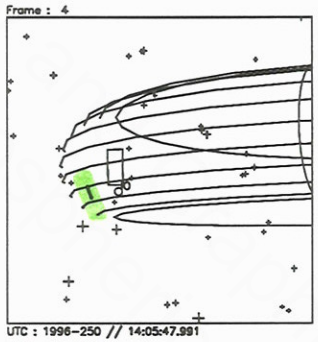

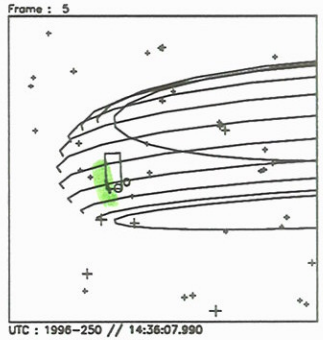

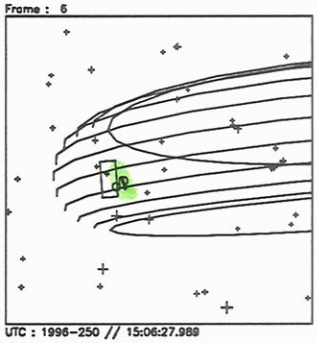

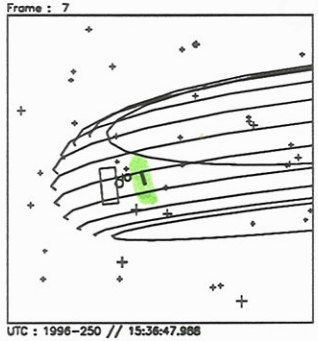

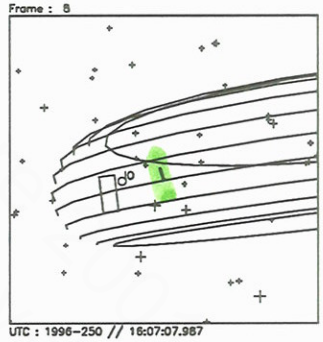

Start UTC_TIME : 1996-250 // 12:04:28.000
No End Time :
Start SCLK : 1/03599057:86:5:4

Target Body : JUPITER
Target Ra/Dec : 253.45/-23.90 Deg
S/C to Body Center : 1263016. Km (17.666538 Rj)
Z-axis Pointing (Ra / Dec) : 98.60 / 25.00 Deg

Activity ID: Orbit G2 **OAPEL** GUSIPPAR **SeqNo** 01+

Title GANYMEDE REGION MAP **Instrument** UVS

Requestor UVS-SWG/J. AIELLO X37737 **Team** UVS **Working Group** SWG

Time System CDS **Load ID** G2A **Calendar Date** 09/06/96 **Week** 36

Start	GTE-CDS 171:00:0	96-250/16:07:15.333	GTE-000/02:52:54.000
End	GTE-CDS 157:00:0	96-250/16:21:24.667	GTE-000/02:38:44.666
Duration	00000014:00:0	000/00:14:09.334	000/00:14:09.334

Top Label G2GUSIPPAR01

Bottom Label (ride-along)

Plot Key UVS **Type** SCI

CDS Bytes 38 **Report Options** BOTH **Scan Platform** Yes

CDS Source PA **Spin State** DUAL **DMS** No

Observation Objective

Ride-along with NIMS observation to study the distribution of compositional elements in a regional context on the surface of Ganymede at high spatial and spectral resolutions.

Design Detail

```
CDS     RIM     COMMAND
---     ---     -------
38      003     CMDRS
        004         34UVS,07,S,N,N,N,S,0,ON,OFF,OFF,ON,OFF,NOOVR,1,OO,9C,00,00
        014         34UVS,C1,F,N,N,N,S,0,OFF,OFF,ON,OFF,OFF,NOOVR,1,2C,05,00,00
-----
38 TOTAL BYTES
```

Frame : 0

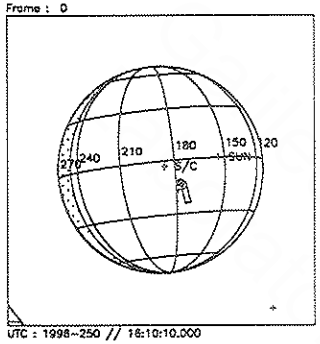

UTC : 1996-250 // 16:10:10.000
SCLK: 1/03599300:86:5:6

Frame : 1

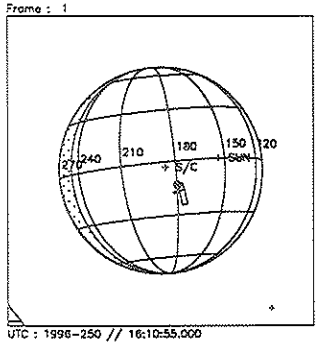

UTC : 1996-250 // 16:10:55.000
SCLK: 1/03599301:63:0:6

Frame : 2

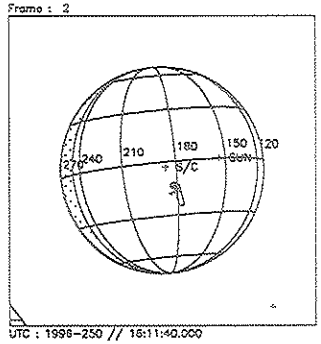

UTC : 1996-250 // 16:11:40.000
SCLK: 1/03599302:39:5:6

Frame : 3

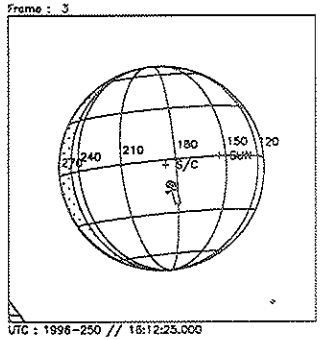

UTC : 1996-250 // 16:12:25.000
SCLK: 1/03599303:16:0:6

Frame : 4

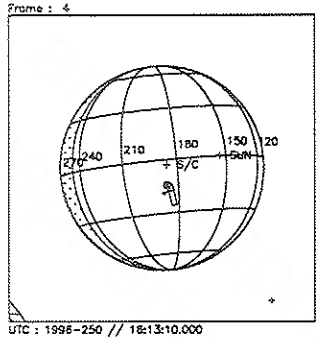

UTC : 1996-250 // 16:13:10.000
SCLK: 1/03599303:83:5:6

Frame : 5

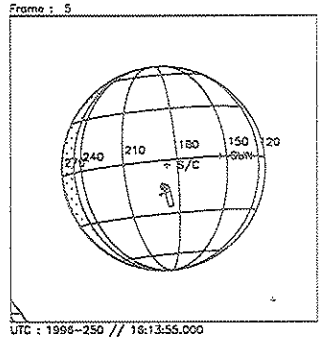

UTC : 1996-250 // 16:13:55.000
SCLK: 1/03599304:60:0:6

Frame : 6

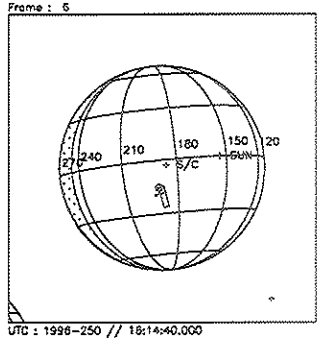

UTC : 1996-250 // 16:14:40.000
SCLK: 1/03599305:36:5:6

Frame : 7

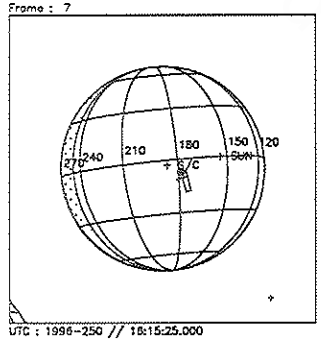

UTC : 1996-250 // 16:15:25.000
SCLK: 1/03599306:13:0:6

Frame : 8

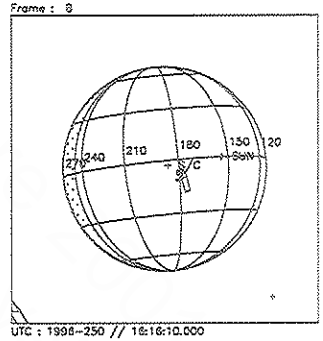

UTC : 1996-250 // 16:16:10.000
SCLK: 1/03599306:80:5:6

Start UTC_TIME : 1996-250 // 16:10:10.000
End UTC_TIME : 1996-250 // 16:21:18.000
Start SCLK : 1/03599300:86:5:6
Delta Time between FOV : 45.00000
FOVs : F Channel(0.1x0.4)

Target Body : GANYMEDE
Target Ra/Dec : 255.76/-20.48 Deg
S/C to Body Center : 77294.06 Km (29.344745 Rg)
Z-axis Pointing (Ra / Dec) : 98.60 / 25.00 Deg

Frame : 9

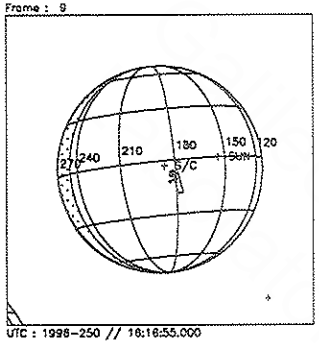

UTC : 1996-250 // 16:16:55.000
SCLK: 1/03599307:57:0:6

Frame : 10

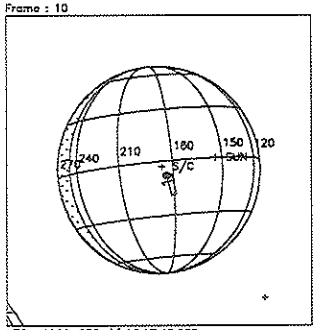

UTC : 1996-250 // 16:17:40.000
SCLK: 1/03599308:33:5:6

Frame : 11

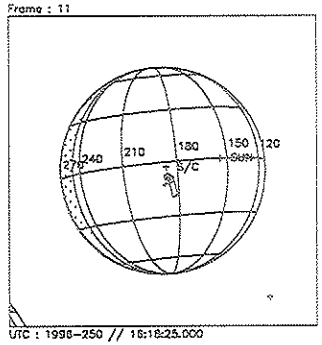

UTC : 1996-250 // 16:18:25.000
SCLK: 1/03599309:10:0:6

Frame : 12

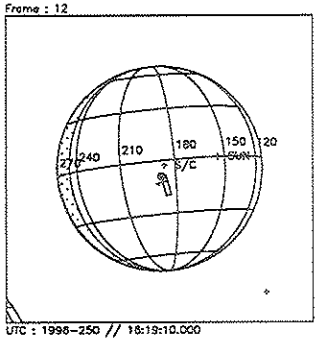

UTC : 1996-250 // 16:19:10.000
SCLK: 1/03599309:77:5:6

Frame : 13

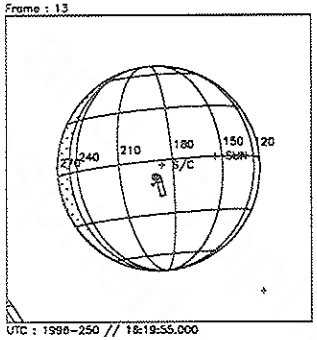

UTC : 1996-250 // 16:19:55.000
SCLK: 1/03599310:54:0:6

Frame : 14

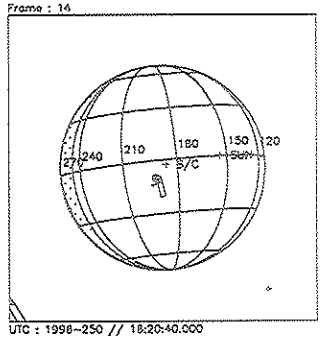

UTC : 1996-250 // 16:20:40.000
SCLK: 1/03599311:30:5:6

Start UTC_TIME : 1996-250 // 16:10:10.000
End UTC_TIME : 1996-250 // 16:21:18.000
Start SCLK : 1/03599300:86:5:6
Delta Time between FOV : 45.00000
FOVs : F Channel(0.1x0.4)

Target Body : GANYMEDE
Target Ra/Dec : 255.77/-20.57 Deg
S/C to Body Center : 74215.51 Km (28.175972 Rg)
Z-axis Pointing (Ra / Dec) : 98.60 / 25.00 Deg

Activity ID:	**Orbit** G2	**OAPEL** GUNRPOLE		**SeqNo** 01+	
Title	UVS NIMS NRPOLE R/A			**Instrument**	UVS
Requestor	UVS-SWG/K.NAVIAUX 37740	**Team** UVS		**Working Group**	SWG

Time System CDS		**Load ID** G2A		**Calendar Date** 09/06/96		Week	36
Start	GEE-CDS 92:14:0		96-250/17:26:58.667		GEE-000/01:33:10.666		
End	GEE-CDS 70:14:0		96-250/17:49:13.333		GEE-000/01:10:56.000		
Duration	00000022:00:0		000/00:22:14.666		000/00:22:14.666		

Top Label	G2GUNRPOLE01+				
Bottom Label	(ride-along)				
Plot Key	UVS	**Type**	SCI		
CDS Bytes	38	**Report Options**	BOTH	**Scan Platform**	No
CDS Source	PA	**Spin State**	DUAL	**DMS**	No

Observation Objective

Ride-along w/ NIMS Ganymede North Pole Observation. Extend the surface scattering property measurements into the ultraviolet (1600Å - 3200Å) in concert with NIMS measurements to infer information about particle size, and refractive and absorption properties of the surface materials. UVS Configuration = F/F Full Scans

Design Detail

```
CDS RIM Command Parameters
--- --- -------- ----------
 38 000 CMDRS
    001   1 34UVS,07,S,N,N,N,S,0,  ON,OFF,OFF,  ON,OFF,NOOVR,1,00,9C,00,00
    021  21 34UVS,C1,F,N,N,N,S,0,OFF,OFF,  ON,OFF,OFF,NOOVR,1,2C,05,00,00
```

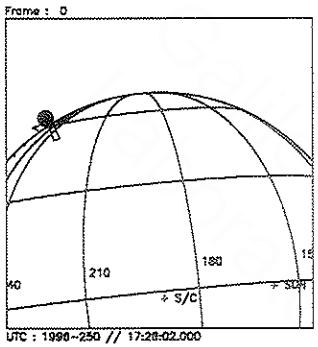

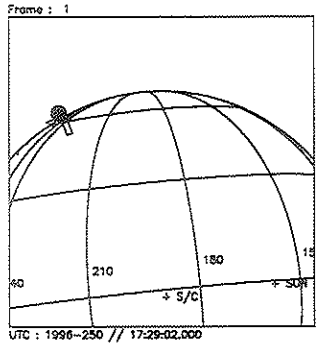

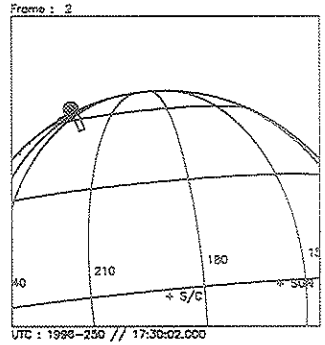

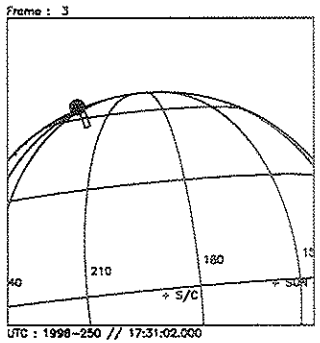

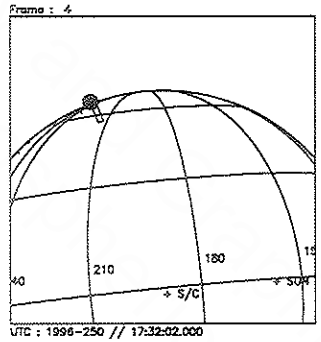

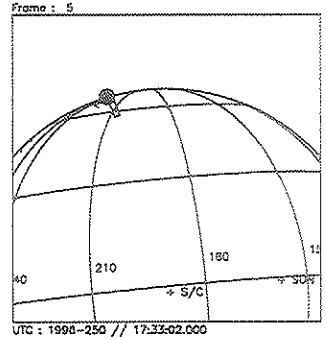

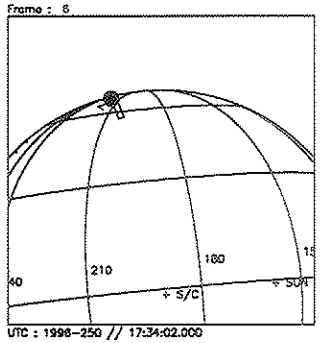

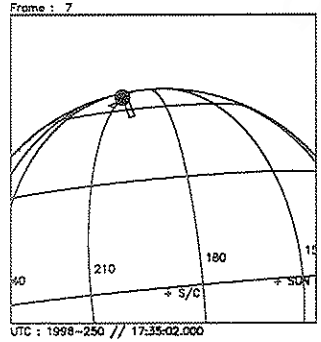

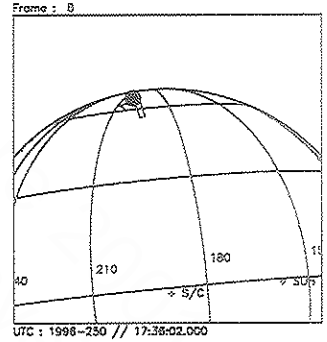

Start UTC_TIME : 1996-250 // 17:28:02.000
End UTC_TIME : 1996-250 // 17:47:14.000
Start SCLK : 1/03599377:87:5:6
Delta Time between FOV : 60.00000
FOVs : F Channel(0.1x0.4)

Target Body : GANYMEDE
Target Cone/Clock : 159.06/ 94.31 Deg
S/C to Body Center : 41894.55 Km (15.905295 Rg)
Z-axis Pointing (Ra / Dec) : 98.60 / 25.00 Deg

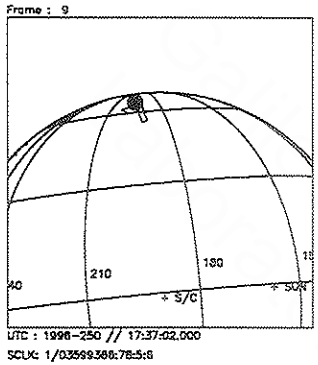

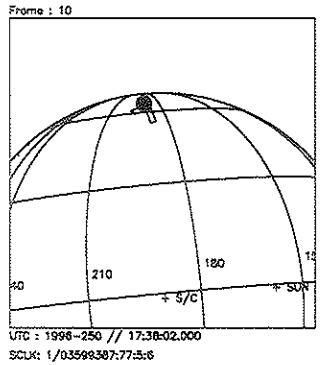

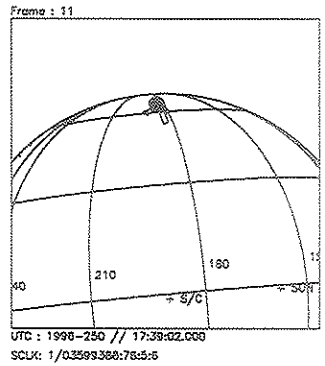

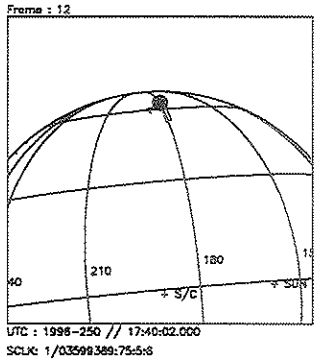

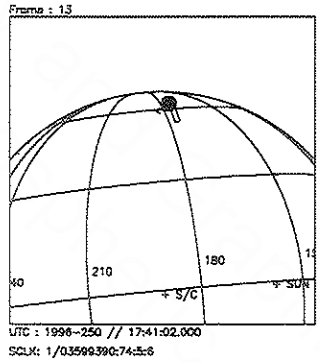

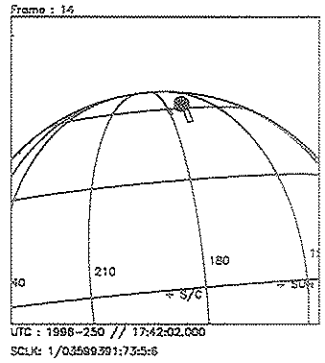

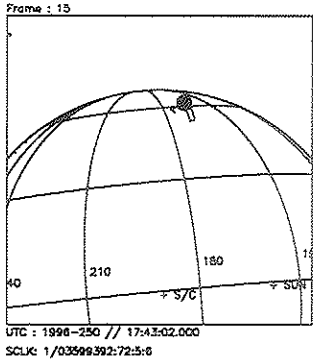

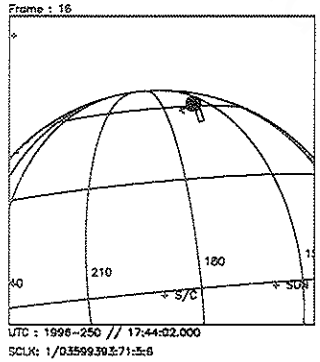

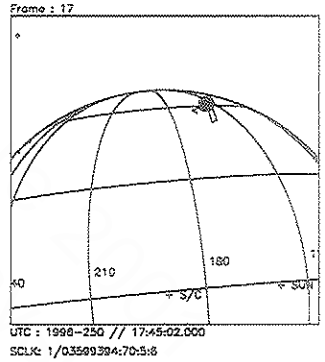

Start UTC_TIME : 1996-250 // 17:28:02.000
End UTC_TIME : 1996-250 // 17:47:14.000
Start SCLK : 1/03599377:87:5:6
Delta Time between FOV : 60.00000
FOVs : F Channel(0.1x0.4)

Target Body : GANYMEDE
Target Cone/Clock : 159.18/ 93.09 Deg
S/C to Body Center : 37817.16 Km (14.357313 Rg)
Z-axis Pointing (Ra / Dec) : 98.60 / 25.00 Deg

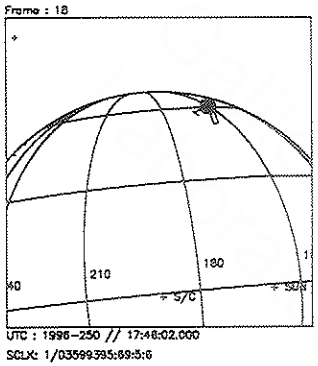

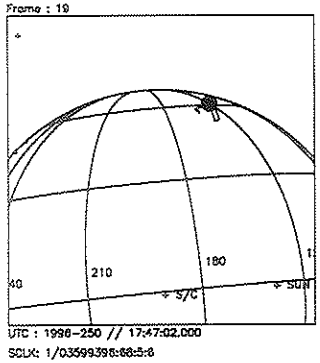

Start UTC_TIME : 1996-250 // 17:28:02.000
End UTC_TIME : 1996-250 // 17:47:14.000
Start SCLK : 1/03599377:87:5:6
Delta Time between FOV : 60.00000
FOVs : F Channel(0.1x0.4)

Target Body : GANYMEDE
Target Cone/Clock : 159.32/ 91.56 Deg
S/C to Body Center : 33742.71 Km (12.810446 Rg)
Z-axis Pointing (Ra / Dec) : 98.60 / 25.00 Deg

Activity ID: Orbit G2 **OAPEL** GUTAMMUZ **SeqNo** 01+

Title UVS NIMS TAMMUZ CRATER R/A **Instrument** UVS

Requestor UVS-SWG/K.NAVIAUX 37740 **Team** UVS **Working Group** SWG

Time System CDS **Load ID** G2A **Calendar Date** 09/06/96 **Week** 36

Start	GTE-CDS 63:08:0	96-250/17:56:22.000	GTE-000/01:03:47.333
End	GTE-CDS 50:08:0	96-250/18:09:30.667	GTE-000/00:50:38.666
Duration	00000013:00:0	000/00:13:08.667	000/00:13:08.667

Top Label G2GUTAMMUZ01+

Bottom Label (ride-along)

Plot Key UVS **Type** SCI

CDS Bytes 38 **Report Options** BOTH **Scan Platform** No

CDS Source PA **Spin State** DUAL **DMS** No

Observation Objective

Ride-along w/ NIMS Ganymede Tammuz Crater observation. Extend the surface scattering property measurements into the ultraviolet (1600Å - 3200Å) in concert with NIMS measurements to infer information about particle size, and refractive and absorption properties of the surface materials. UVS Configuration = F/F Full Scans

Design Detail

```
CDS RIM Command  Parameter
--- --- -------- ----------
 38 003 CMDRS
    004      1   34UVS,07,S,N,N,N,S,0,  ON,OFF,OFF,  ON,OFF,NOOVR,1,00,9C,00,00
    012      9   34UVS,C1,F,N,N,N,S,0,OFF,OFF,  ON,OFF,OFF,NOOVR,1,2C,05,00,00
```

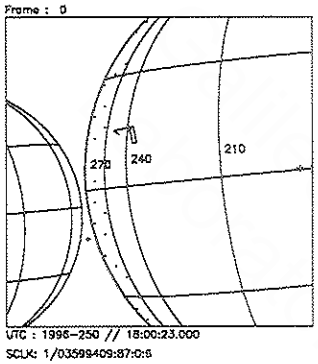

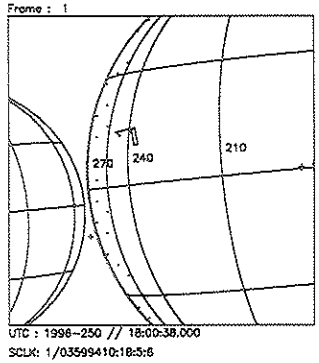

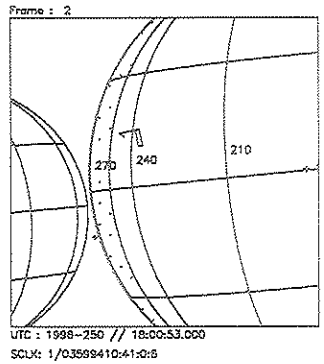

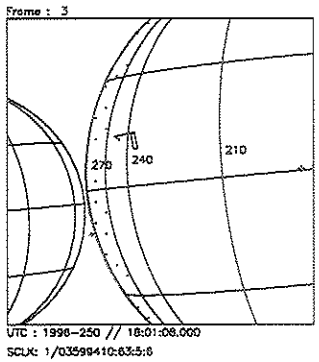

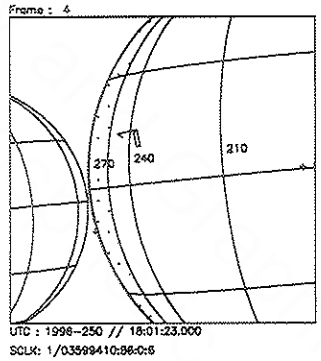

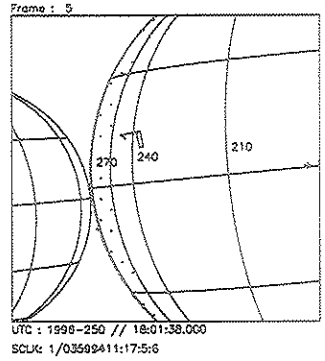

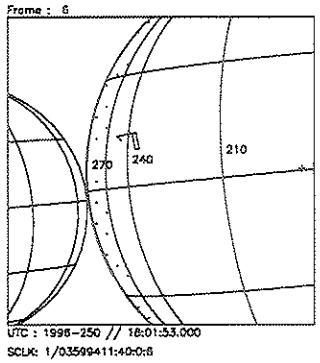

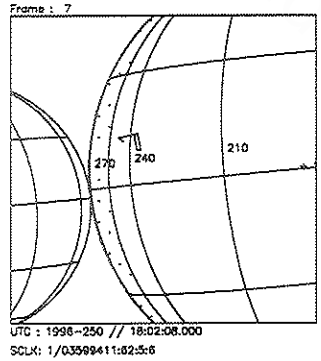

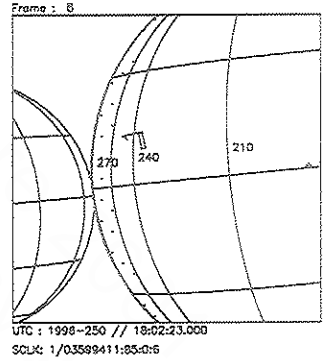

Start UTC_TIME : 1996-250 // 18:00:23.000
End UTC_TIME : 1996-250 // 18:09:29.000
Start SCLK : 1/03599409:87:0:6
Delta Time between FOV : 15.00000
FOVs : F Channel(0.1x0.4)

Target Body : GANYMEDE
Target Cone/Clock : 159.57/ 88.12 Deg
S/C to Body Center : 27253.63 Km (10.346861 Rg)
Z-axis Pointing (Ra / Dec) : 98.60 / 25.00 Deg

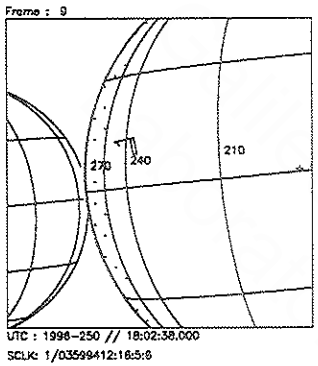

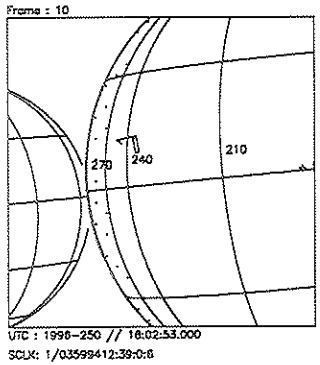

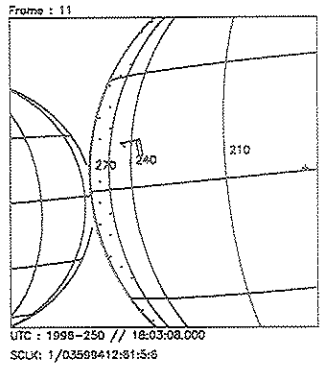

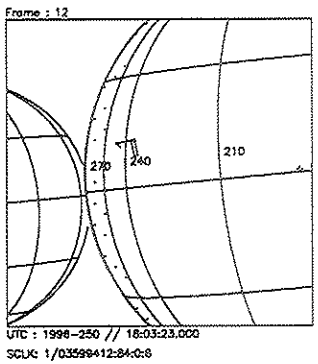

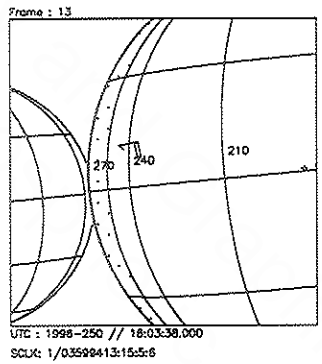

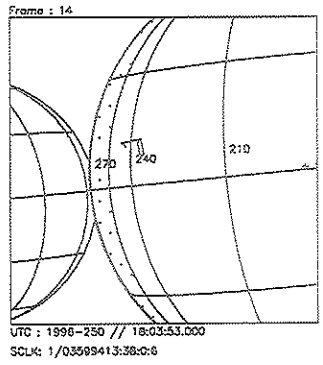

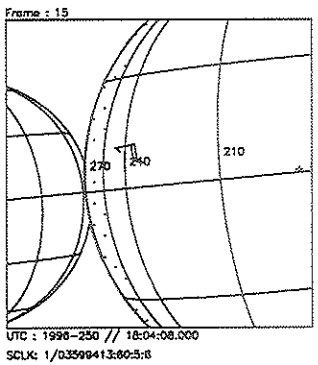

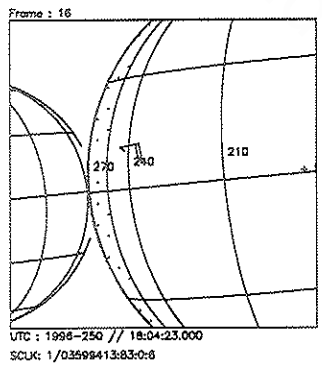

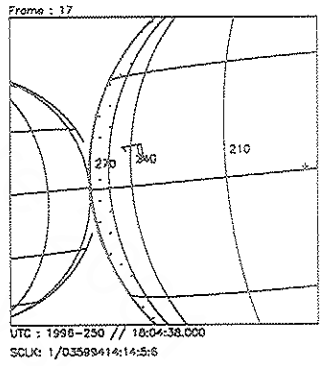

Start UTC_TIME : 1996-250 // 18:00:23.000
End UTC_TIME : 1996-250 // 18:09:29.000
Start SCLK : 1/03599409:87:0:6
Delta Time between FOV : 15.00000
FOVs : F Channel(0.1x0.4)

Target Body : GANYMEDE
Target Cone/Clock : 159.62/ 87.41 Deg
S/C to Body Center : 26237.24 Km (9.9609865 Rg)
Z-axis Pointing (Ra / Dec) : 98.60 / 25.00 Deg

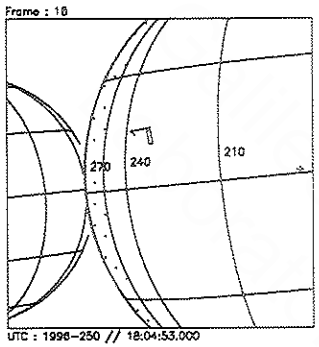

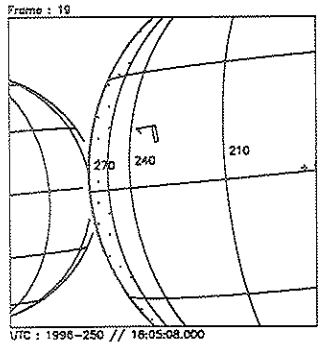

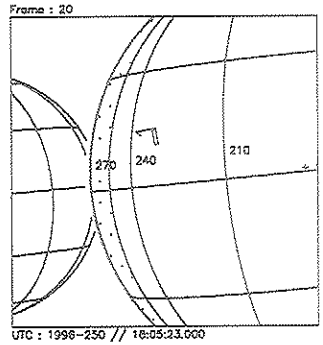

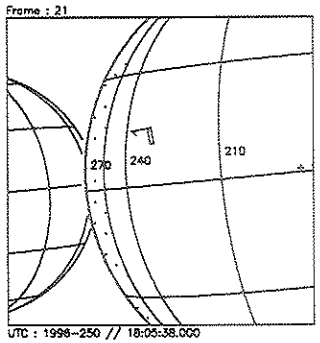

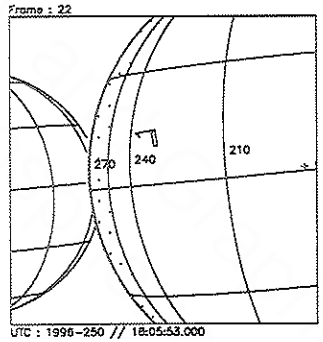

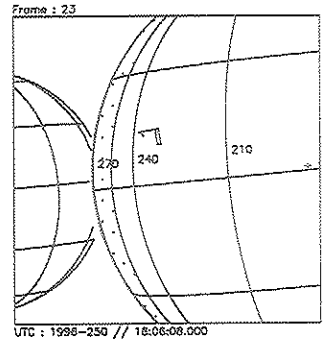

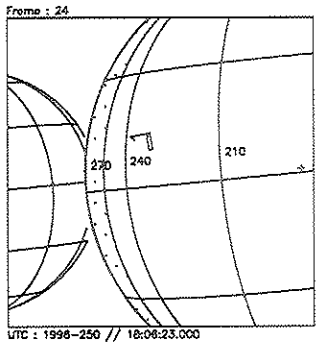

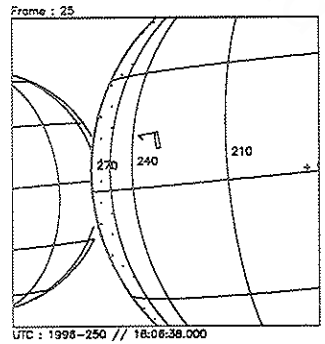

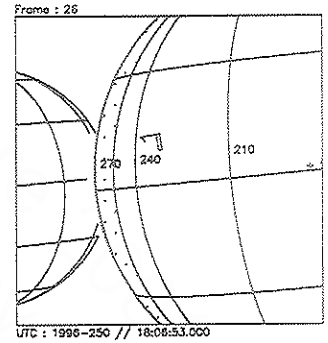

Start UTC_TIME : 1996-250 // 18:00:23.000
End UTC_TIME : 1996-250 // 18:09:29.000
Start SCLK : 1/03599409:87:0:6
Delta Time between FOV : 15.00000
FOVs : F Channel(0.1x0.4)

Target Body : GANYMEDE
Target Cone/Clock : 159.66/ 86.65 Deg
S/C to Body Center : 25221.21 Km (9.5752512 Rg)
Z-axis Pointing (Ra / Dec) : 98.60 / 25.00 Deg

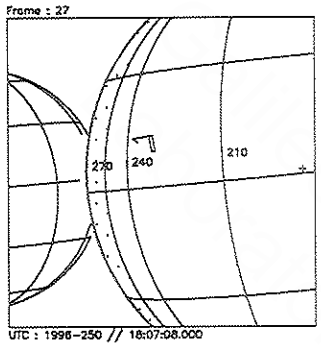

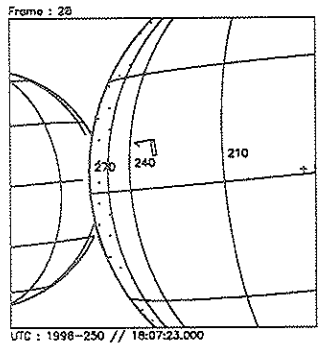

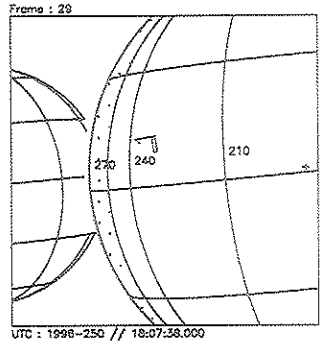

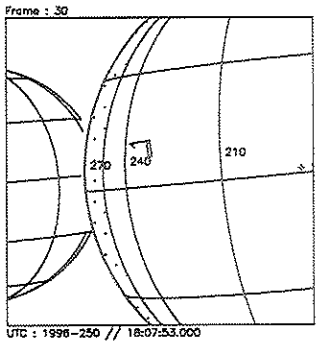

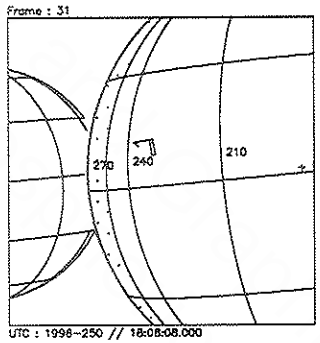

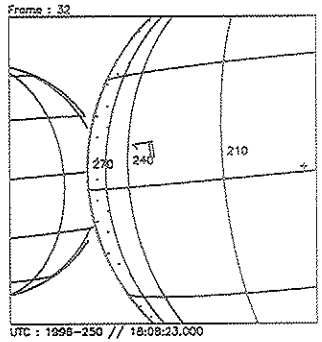

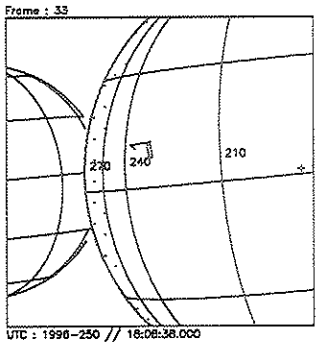

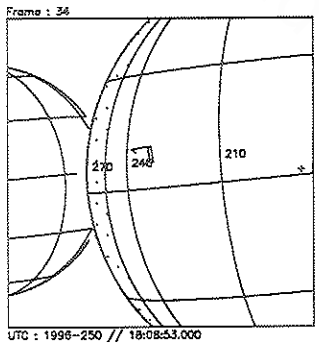

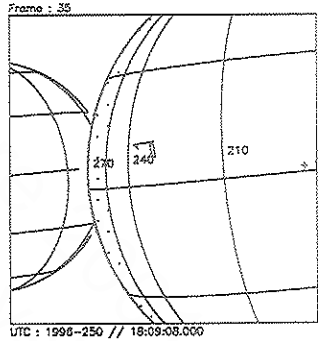

Start UTC_TIME : 1996-250 // 18:00:23.000
End UTC_TIME : 1996-250 // 18:09:29.000
Start SCLK : 1/03599409:87:0:6
Delta Time between FOV : 15.00000
FOVs : F Channel(0.1x0.4)

Target Body : GANYMEDE
Target Cone/Clock : 159.70/ 85.81 Deg
S/C to Body Center : 24205.59 Km (9.1896714 Rg)
Z-axis Pointing (Ra / Dec) : 98.60 / 25.00 Deg

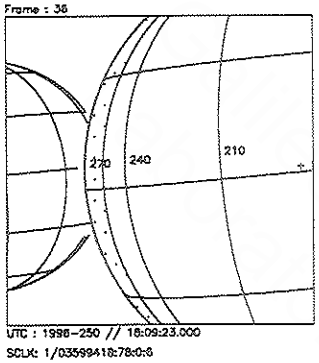

Start UTC_TIME : 1996-250 // 18:00:23.000
End UTC_TIME : 1996-250 // 18:09:29.000
Start SCLK : 1/03599409:87:0:6
Delta Time between FOV : 15.00000
FOVs : F Channel(0.1x0.4)

Target Body : GANYMEDE
Target Cone/Clock : 159.75/ 84.91 Deg
S/C to Body Center : 23190.44 Km (8.8042665 Rg)
Z-axis Pointing (Ra / Dec) : 98.60 / 25.00 Deg

Activity ID:	**Orbit** G2	**OAPEL** GUBRTLMB		**SeqNo** 02-	
Title	UVS GANYMEDE BRIGHT LIMB (OH)			**Instrument**	UVS
Requestor	UVS-SWG/K.NAVIAUX 37740	**Team** UVS		**Working Group**	SWG

Time System	CDS	**Load ID** G2A	**Calendar Date**	09/06/96	Week 36
Start	GTE-CDS 13:00:0	96-250/18:47:00.667	GTE-000/00:13:08.666		
End	GTE-CDS 9:00:0	96-250/18:51:03.333	GTE-000/00:09:06.000		
Duration	00000004:00:0	000/00:04:02.666	000/00:04:02.666		

Top Label	G2GUBRTLMB02-				
Bottom Label	(recorded)				
Plot Key	UVS	**Type**	SCI		
CDS Bytes	92	**Report Options**	BOTH	**Scan Platform**	Yes
CDS Source	PA	**Spin State**	DUAL	**DMS**	Yes

Observation Objective

Measure the altitude distribution of volatiles near the sub-solar point to determine the escape rates from the Jovian satellites when the atmosphere is in full solar illumination. Search for outgassing of OH (3019.9 - 3114.2 Å) using the UVS N-Channel. 4 RIM Ganymede Bright Limb Drift observation (1 RIM target slew + 3 RIM recorded data). Target s/p to ~1000 Km off satellite limb and allow s/c motion to drift FOV onto the bright limb sub-solar point. Note, this observation is recorded at 28.8 kbps (MPW) to allow both NIMS and PWS to ride-along. UVS Configuration = N/N 1-posn 33-step on OH

Design Detail

```
CDS RIM Command Parameter
--- --- ------- ---------
 38 000 CMDRS
    001     1   34UVS,D7,F,N,N,N,S,0,OFF,  ON,OFF,  ON,OFF,NOOVR,1,78,5D,00,00
    004     4   34UVS,C[illegible]F,N,N,N,S,0,OFF,OFF,  ON,OFF,OFF,NOOVR,1,2C,[illegible],00,00
 18 001 SCIREC
 36 001 TARGET  (1 RIM Posn_Slew)
```

Frame : 0

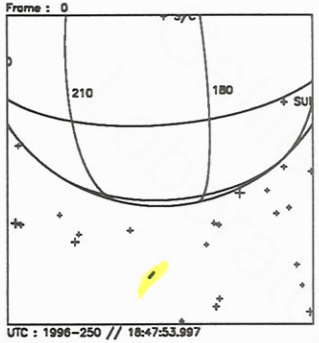

UTC : 1996-250 // 18:47:53.997
SCLK: 1/03599456:86:5:6

Frame : 1

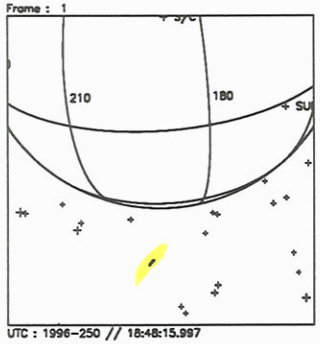

UTC : 1996-250 // 18:48:15.997
SCLK: 1/03599457:28:5:6

Frame : 2

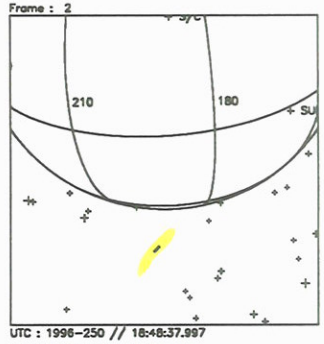

UTC : 1996-250 // 18:48:37.997
SCLK: 1/03599457:61:5:6

Frame : 3

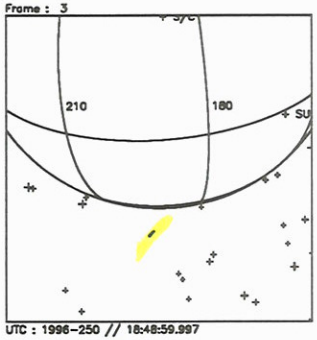

UTC : 1996-250 // 18:48:59.997
SCLK: 1/03599458:03:5:6

Frame : 4

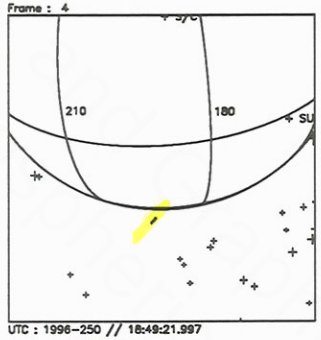

UTC : 1996-250 // 18:49:21.997
SCLK: 1/03599458:36:5:6

Frame : 5

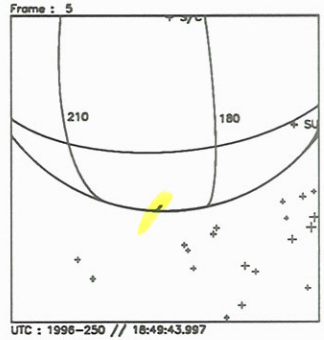

UTC : 1996-250 // 18:49:43.997
SCLK: 1/03599458:69:5:6

Frame : 6

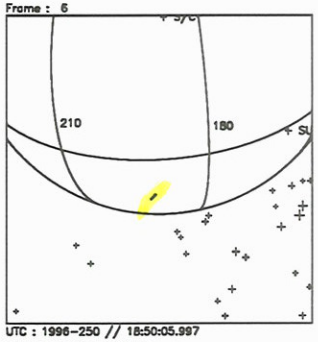

UTC : 1996-250 // 18:50:05.997
SCLK: 1/03599459:11:5:6

Frame : 7

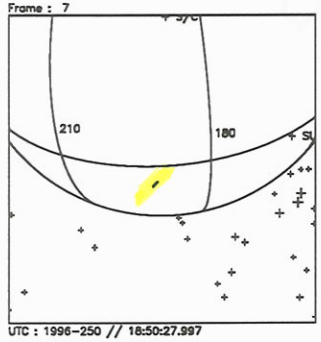

UTC : 1996-250 // 18:50:27.997
SCLK: 1/03599459:44:5:6

Frame : 8

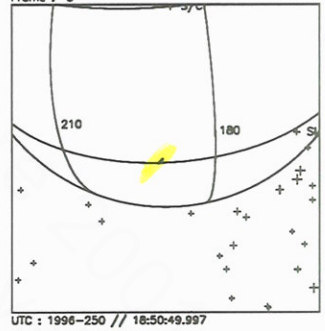

UTC : 1996-250 // 18:50:49.997
SCLK: 1/03599459:77:5:6

Start UTC_TIME : 1996-250 // 18:47:54.000
No End Time :
Start SCLK : 1/03599456:86:5:6

Target Body : GANYMEDE
Target Ra/Dec : 258.67/-47.45 Deg
S/C to Body Center : 6157.784 Km (2.3378071 Rg)
Z-axis Pointing (Ra / Dec) : 98.60 / 25.00 Deg

Activity ID: Orbit G2 OAPEL GUDRKLMB SeqNo 01-

Title UVS GANYMEDE DARK LIMB Instrument UVS

Requestor UVS-SWG/K.NAVIAUX 37740 Team UVS Working Group SWG

Time System CDS Load ID G2A Calendar Date 09/06/96 Week 36

Start	GTE-CDS 1:00:0	96-250/18:59:08.667	GTE-000/00:01:00.666
End	GTE+CDS 10:00:0	96-250/19:10:15.999	GTE+000/00:10:06.666
Duration	00000011:00:0	000/00:11:07.332	000/00:11:07.332

Top Label G2GUDRKLMB01-

Bottom Label (recorded)

Plot Key	UVS	Type	SCI		
CDS Bytes	74	Report Options	BOTH	Scan Platform	Yes
CDS Source	PA	Spin State	DUAL	DMS	Yes

Observation Objective

Measure the altitude distribution of volatiles off the dark limb to determine the particle impact excitation emission rates from the Jovian satellites. PWS Quiet Mode for G2 c/a. 11 RIM Ganymede Dark Limb Drift observation (4 RIM target slew + 7 RIM recorded data). Target s/p to satellite dark limb and allow s/c motion to drift the FOV to ~1 Rg off the dark limb. UVS Configuration = G/G 2-posn 1-step center @ 1215.5Å ; background @ 1229.0Å

Design Detail

```
CDS RIM Command Parameter
--- --- -------- ----------
 38 003 CMDRS
    004      1    34UVS,C1,F,N,N,N,S,0,OFF,OFF,  ON,  ON,OFF,NOOVR,1,62,05,00,09
    011      8    34UVS,C1,F,N,N,N,S,0,OFF,OFF,  ON,OFF,OFF,NOOVR,1,2C,05,00,00                SCITLM (
use FPSG LPW recording around c/a -> no SCITLMs needed) 0
SCIREC  (use FPSG continuous recording around c/a to record data -> no SCIREC needed)
 36 004 TARGET  (4 RIM Posn_Slew) 0
```

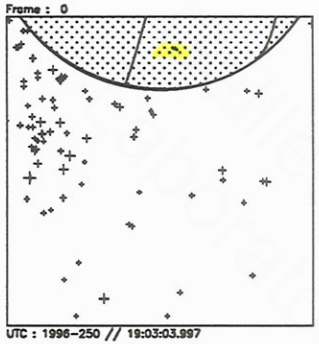

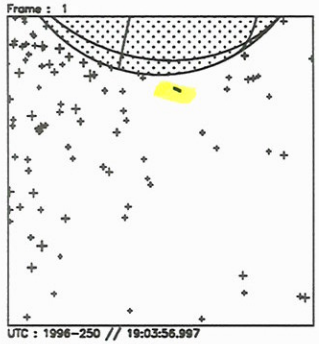

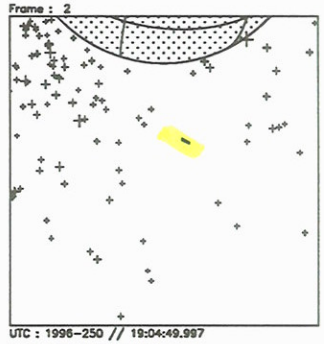

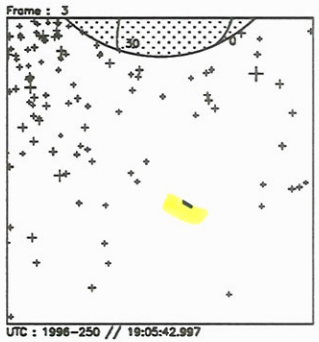

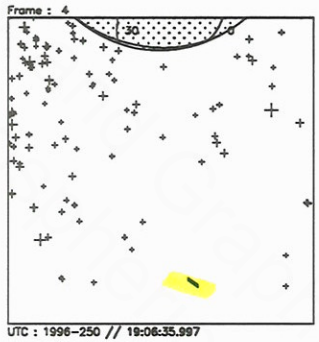

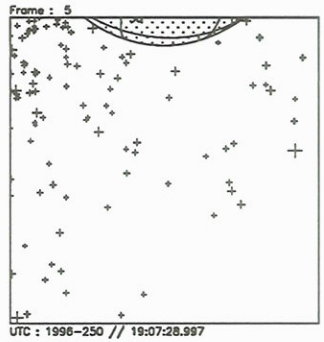

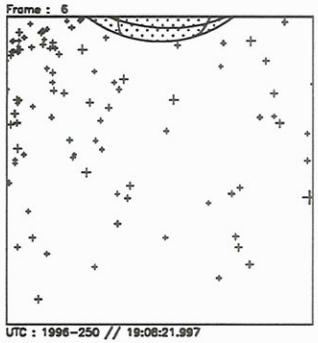

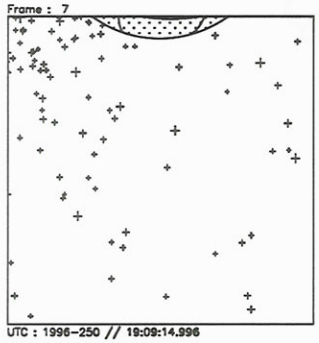

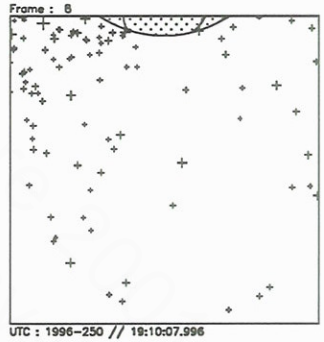

Start UTC_TIME : 1996-250 // 19:03:04.000
No End Time :
Start SCLK : 1/03599471:86:5:6

Target Body : GANYMEDE
Target Ra/Dec : 70.86/-38.85 Deg
S/C to Body Center : 3302.204 Km (1.2536840 Rg)
Z-axis Pointing (Ra / Dec) : 98.60 / 25.00 Deg

Activity ID: Orbit G2 **OAPEL** IUIECLPS **SeqNo** 01-

Title UVS IO ECLIPSE (INGRESS) **Instrument** UVS

Requestor UVS-SWG/K.NAVIAUX 37740 **Team** UVS **Working Group** SWG

Time System CDS **Load ID** G2A **Calendar Date** 09/07/96 **Week** 36

Start	GEE+CDS 1587:00:0	96-251/21:44:47.333	GEE+001/02:44:38.000
End	GEE+CDS 1600:00:0	96-251/21:57:55.999	GEE+001/02:57:46.666
Duration	00000013:00:0	000/00:13:08.666	000/00:13:08.666

Top Label G2IUIECLPS01-

Bottom Label (real-time)

Plot Key	UVS	**Type**	SCI		
CDS Bytes	130	**Report Options**	BOTH	**Scan Platform**	Yes
CDS Source	PA	**Spin State**	DUAL	**DMS**	No

Observation Objective

UVS real-time Io Eclipse observation. Characterize the change in the lower atmospheric UV airglow emissions as Io enters and exits eclipse. Determine if the source of the change is due to: 1) a change in the lower atmospheric composition as it cools (ie. SO2 condensation); or 2) a potential change in the excitation mechanism if solar photoexcitation is dominant over particle impact. G2IUIECLPS01- = Io eclipse ingress measurment. 2 scan-platform drifts across Io in real-time (28 RIM 3-sigma drift rate) using the UVS 10bps RTS rate. Only 1 drift will be done prior to eclipse ingress and 1 after eclipse ingress due to PWS time sharing. Each drift will include 28 RIMs HV On / 2 RIMs HV Off for PWS time sharing. UVS Configuration = F/G Full Scans

Design Detail

```
CDS RIM Command Paramter
--- --- -------- ---------
 28 003+UVFLUSH DISCRD,UVS
 36 004 TARGET  (4 RIM Posn_Slew)
 38 003 CMDRS
    004      1   34UVS,07,S,N,N,N,S,0,  ON,OFF,  ON,  ON,OFF,NOOVR,1,00,9C,01,2C
    013     10   34UVS,C1,F,N,N,N,S,0,OFF,OFF,  ON,OFF,OFF,NOOVR,1,2C,05,00,00
 28 011+UVFLUSH (Packet, UVS)
```

Frame : 0

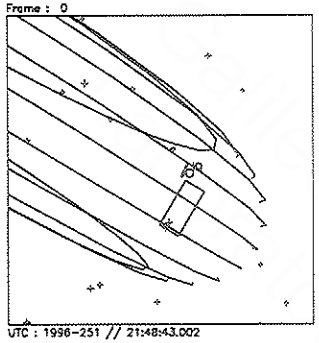

UTC : 1996-251 // 21:48:43.002
SCLK: 1/03601059:87:1:6

Frame : 1

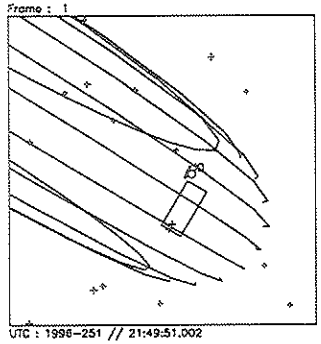

UTC : 1996-251 // 21:49:51.002
SCLK: 1/03601081:07:1:6

Frame : 2

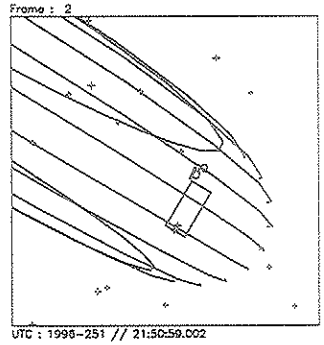

UTC : 1996-251 // 21:50:59.002
SCLK: 1/03601062:18:1:6

Frame : 3

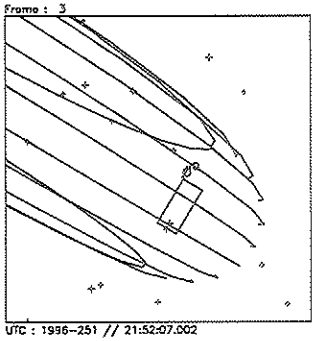

UTC : 1996-251 // 21:52:07.002
SCLK: 1/03601063:29:1:6

Frame : 4

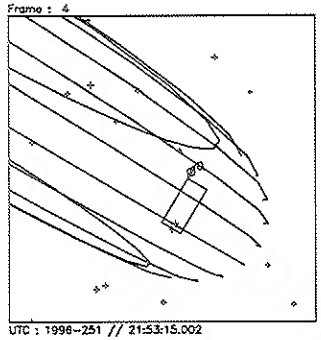

UTC : 1996-251 // 21:53:15.002
SCLK: 1/03601084:40:1:6

Frame : 5

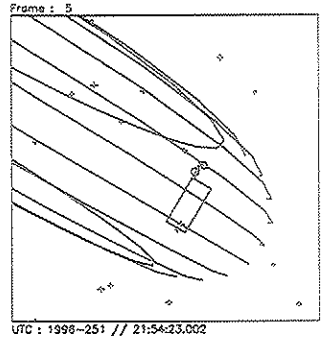

UTC : 1996-251 // 21:54:23.002
SCLK: 1/03601065:51:1:6

Frame : 6

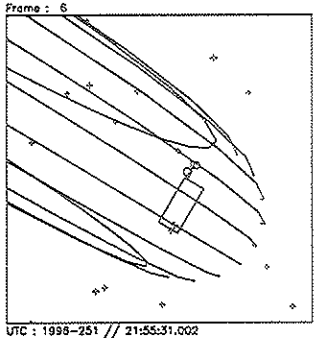

UTC : 1996-251 // 21:55:31.002
SCLK: 1/03601066:62:1:6

Frame : 7

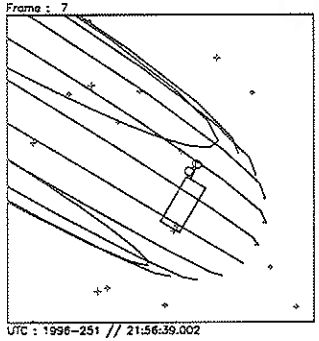

UTC : 1996-251 // 21:56:39.002
SCLK: 1/03601067:73:1:6

@ packet @ 21:57:41

Frame : 8

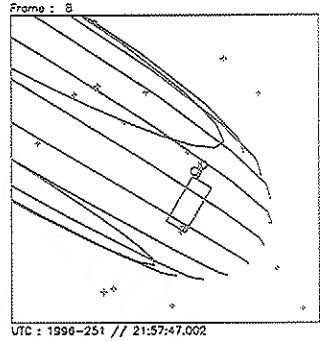

UTC : 1996-251 // 21:57:47.002
SCLK: 1/03601068:84:1:6

Start UTC_TIME : 1996-251 // 21:48:43.000
No End Time :
Start SCLK : 1/03601059:87:1:6

Target Body : JUPITER
Target Ra/Dec : 12.74/ 6.44 Deg
S/C to Body Center : 835336.0 Km (11.684328 Rj)
Z-axis Pointing (Ra / Dec) : 98.60 / 25.00 Deg

Activity ID:	**Orbit** G2	**OAPEL** IUIECLPS		**SeqNo** 02-	
Title	UVS IO ECLIPSE (EGRESS)			**Instrument**	UVS
Requestor	UVS-SWG/K.NAVIAUX 37740	**Team** UVS		**Working Group**	SWG

Time System	CDS	**Load ID**	G2A	**Calendar Date**	09/07/96	Week 36
Start	GEE+CDS 1602:00:0	96-251/21:59:57.333		GEE+001/02:59:48.000		
End	GEE+CDS 1615:00:0	96-251/22:13:05.999		GEE+001/03:12:56.666		
Duration	00000013:00:0	000/00:13:08.666		000/00:13:08.666		

Top Label	G2IUIECLPS02-				
Bottom Label	(real-time)				
Plot Key	UVS	**Type**	SCI		
CDS Bytes	130	**Report Options**	BOTH	**Scan Platform**	Yes
CDS Source	PA	**Spin State**	DUAL	**DMS**	No

Observation Objective

UVS real-time Io Eclipse observation. Characterize the change in the lower atmospheric UV airglow emissions as Io enters and exits eclipse. Determine if the source of the change is due to: 1) a change in the lower atmospheric composition as it cools (ie. SO2 condensation); or 2) a potential change in the excitation mechanism if solar photoexcitation is dominant over particle impact. G2IUIECLPS02- = Io eclipse egress measurement. 2 scan-platform drifts across Io in real-time (38 RIM 3-sigma drift rate) using the UVS 10bps RTS rate. Only 1 drift will be done prior to eclipse ingress and 1 after eclipse ingress due to PWS time sharing. Each drift will include 38 RIMs HV On / 22 RIMs HV Off for PWS time sharing. UVS Configuration = F/G Full Scans

Design Detail

```
CDS RIM Command Parameter
--- --- ------- ----------
 28 003+UVFLUSH DISCRD,UVS
 36 004 TARGET (4 RIM Posn_Slew)
 38 003 CMDRS
    004      1   34UVS,07,S,N,N,N,S,0,  ON,OFF,  ON,  ON,OFF,NOOVR,1,00,9C,01,2C
    013     10   34UVS,C1,F,N,N,N,S,0,OFF,OFF,  ON,OFF,OFF,NOOVR,1,2C,05,00,00
 28 012+UVFLUSH packet,UVS
```

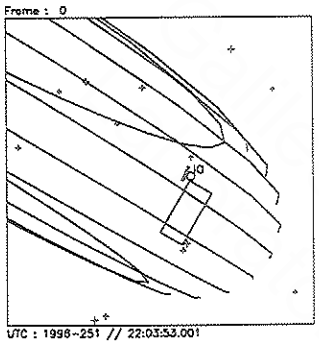

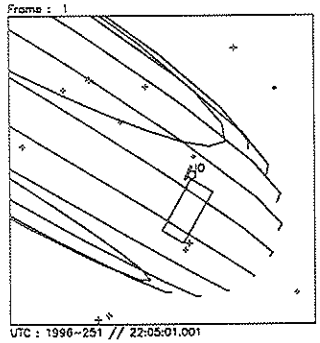

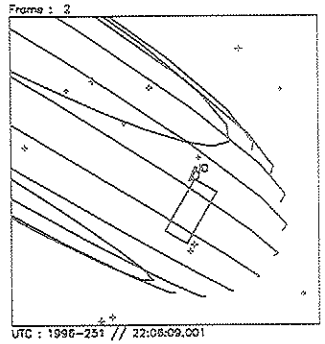

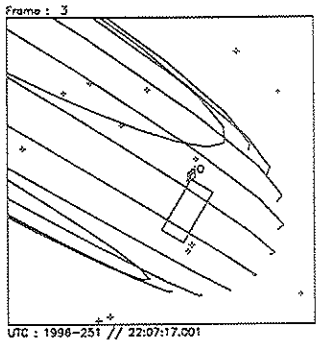

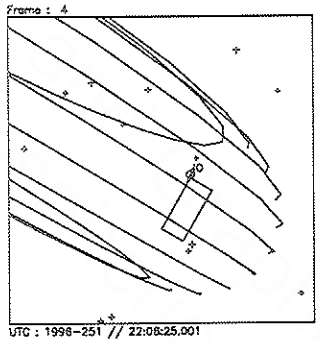

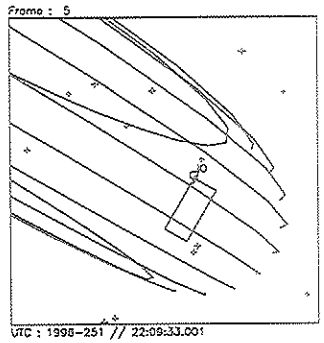

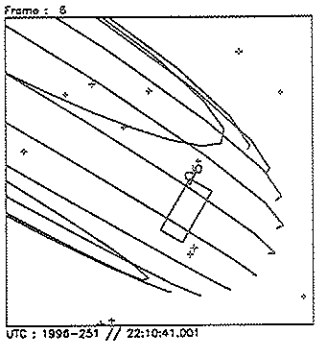

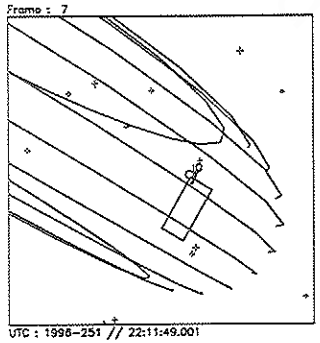

Packet @
22:12:51

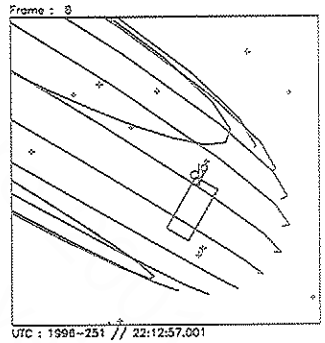

Start UTC_TIME : 1996-251 // 22:03:53.000
No End Time :
Start SCLK : 1/03601074:87:1:6

Target Body : JUPITER
Target Ra/Dec : 13.64/ 6.85 Deg
S/C to Body Center : 839638.1 Km (11.744505 Rj)
Z-axis Pointing (Ra / Dec) : 98.60 / 25.00 Deg

Activity ID:	Orbit G2	**OAPEL**	IUIECLPS	**SeqNo**	03-
Title	UVS IO ECLIPSE (EGRESS)			**Instrument**	UVS
Requestor	UVS-SWG/K.NAVIAUX 37740	**Team**	UVS	**Working Group**	SWG

Time System	CDS	**Load ID**	G2A	**Calendar Date**	09/08/96 Week 36

Start	GEE+CDS 1722:00:0	96-252/00:01:17.333	GEE+001/05:01:08.000
End	GEE+CDS 1735:00:0	96-252/00:14:25.999	GEE+001/05:14:16.666
Duration	00000013:00:0	000/00:13:08.666	000/00:13:08.666

Top Label	G2IUIECLPS03-				
Bottom Label	(real-time)				
Plot Key	UVS	**Type**	SCI		
CDS Bytes	130	**Report Options**	BOTH	**Scan Platform**	Yes
CDS Source	PA	**Spin State**	DUAL	**DMS**	No

Observation Objective

UVS real-time Io Eclipse observation. Characterize the change in the lower atmospheric UV airglow emissions as Io enters and exits eclipse. Determine if the source of the change is due to: 1) a change in the lower atmospheric composition as it cools (ie. SO2 condensation); or 2) a potential change in the excitation mechanism if solar photoexcitation is dominant over particle impact. G2IUIECLPS02- = Io eclipse egress measurement. 2 scan-platform drifts across Io in real-time (38 RIM 3-sigma drift rate) using the UVS 10bps RTS rate. Only 1 drift will be done prior to eclipse ingress and 1 after eclipse ingress due to PWS time sharing. Each drift will include 38 RIMs HV On / 22 RIMs HV Off for PWS time sharing. UVS Configuration = F/G Full Scans

Design Detail

```
CDS RIM Command Parameter
--- --- -------- ----------
 28 003+UVFLUSH DISCRD,UVS
 36 004 TARGET (4 RIM Posn_Slew)
 38 003 CMDRS
    004      1   34UVS,07,S,N,N,N,S,0,  ON,OFF,  ON,  ON,OFF,NOOVR,1,00,9C,01,2C
    013     10   34UVS,C1,F,N,N,N,S,0,OFF,OFF,  ON,OFF,OFF,NOOVR,1,2C,05,00,00
 28 012+UVFLUSH PACKET, UVS
```

Frame : 0

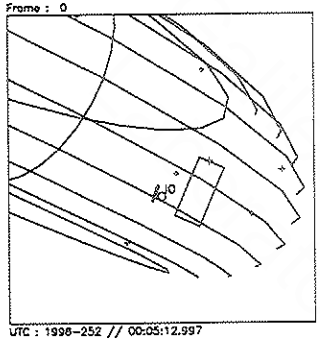

UTC : 1996-252 // 00:05:12.997
SCLK: 1/03601194:87:1:6

Frame : 1

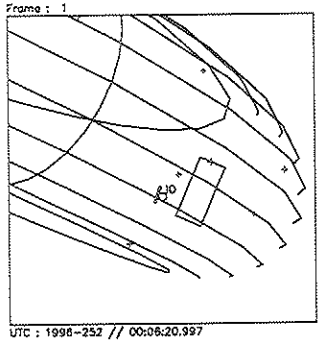

UTC : 1996-252 // 00:06:20.997
SCLK: 1/03601196:07:1:6

Frame : 2

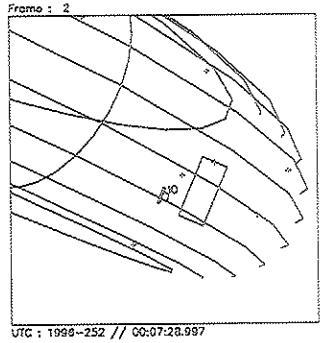

UTC : 1996-252 // 00:07:28.997
SCLK: 1/03601197:18:1:6

Frame : 3

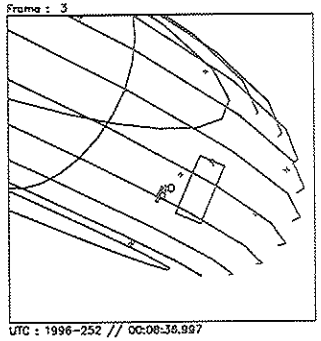

UTC : 1996-252 // 00:08:36.997
SCLK: 1/03601198:29:1:6

Frame : 4

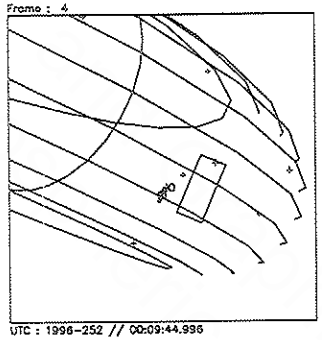

UTC : 1996-252 // 00:09:44.996
SCLK: 1/03601199:40:1:6

Frame : 5

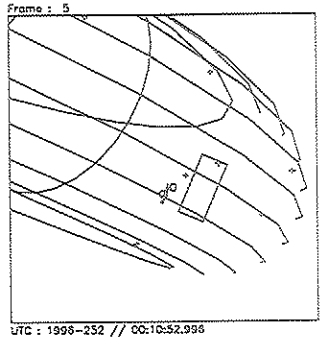

UTC : 1996-252 // 00:10:52.996
SCLK: 1/03601200:51:1:6

Frame : 6

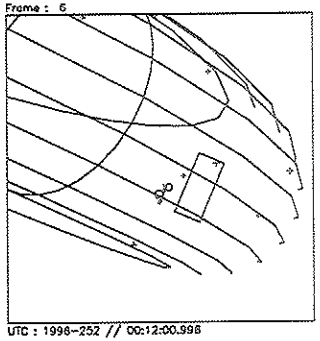

UTC : 1996-252 // 00:12:00.996
SCLK: 1/03601201:62:1:6

Frame : 7

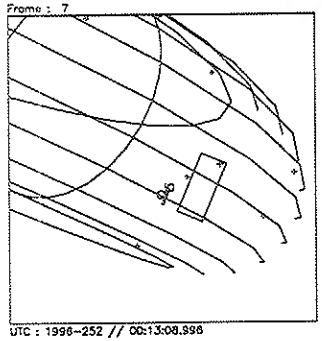

UTC : 1996-252 // 00:13:08.996
SCLK: 1/03601202:73:1:6

Packet at 00:14:11

Frame : 8

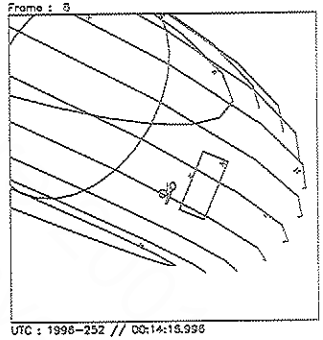

UTC : 1996-252 // 00:14:16.996
SCLK: 1/03601203:84:1:6

Start UTC_TIME : 1996-252 // 00:05:13.000
No End Time :
Start SCLK : 1/03601194:87:1:6

Target Body : JUPITER
Target Ra/Dec : 20.57/ 9.96 Deg
S/C to Body Center : 877390.5 Km (12.272569 Rj)
Z-axis Pointing (Ra / Dec) : 98.60 / 25.00 Deg

Activity ID:	**Orbit** G2	**OAPEL** IUIECLPS		**SeqNo** 04-	
Title	UVS IO ECLIPSE (EGRESS)			**Instrument**	UVS
Requestor	UVS-SWG/K.NAVIAUX 37740	**Team** UVS		**Working Group**	SWG

Time System	CDS	**Load ID** G2A	**Calendar Date**	09/08/96	Week 36
Start	GEE+CDS 1737:00:0	96-252/00:16:27.333	GEE+001/05:16:18.000		
End	GEE+CDS 1750:00:0	96-252/00:29:35.999	GEE+001/05:29:26.666		
Duration	00000013:00:0	000/00:13:08.666	000/00:13:08.666		

Top Label	G2IUIECLPS04-				
Bottom Label	(real-time)				
Plot Key	UVS	**Type**	SCI		
CDS Bytes	130	**Report Options**	BOTH	**Scan Platform**	Yes
CDS Source	PA	**Spin State**	DUAL	**DMS**	No

Observation Objective

UVS real-time Io Eclipse observation. Characterize the change in the lower atmospheric UV airglow emissions as Io enters and exits eclipse. Determine if the source of the change is due to: 1) a change in the lower atmospheric composition as it cools (ie. SO2 condensation); or 2) a potential change in the excitation mechanism if solar photoexcitation is dominant over particle impact. G2IUIECLPS02- = Io eclipse egress measurement. 2 scan-platform drifts across Io in real-time (38 RIM 3-sigma drift rate) using the UVS 10bps RTS rate. Only 1 drift will be done prior to eclipse ingress and 1 after eclipse ingress due to PWS time sharing. Each drift will include 38 RIMs HV On / 22 RIMs HV Off for PWS time sharing. UVS Configuration = F/G Full Scans

Design Detail

```
CDS RIM Command Parameter
--- --- ------- ---------
 28 003+UVFLUSH DISCRD,UVS
 36 004 TARGET  (4 RIM Posn_Slew)
 38 003 CMDRS
    004      1   34UVS,07,S,N,N,N,S,0,  ON,OFF,  ON,  ON,OFF,NOOVR,1,00,9C,01,2C
    013     10   34UVS,C1,F,N,N,N,S,0,OFF,OFF,  ON,OFF,OFF,NOOVR,1,2C,05,00,00
 28 012+UVFLUSH PACKET,UVS
```

Frame : 0

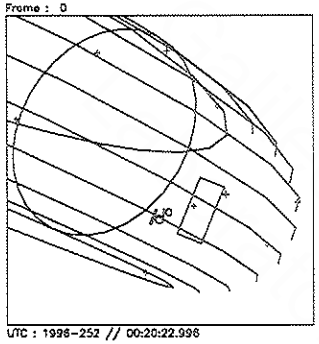

UTC : 1996-252 // 00:20:22.996
SCLK: 1/03601209:87:1:6

Frame : 1

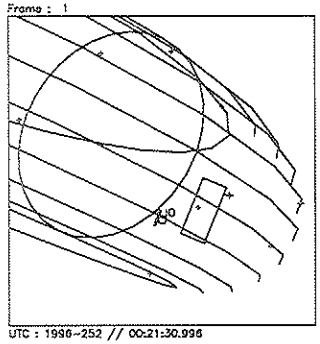

UTC : 1996-252 // 00:21:30.996
SCLK: 1/03601211:07:1:6

Frame : 2

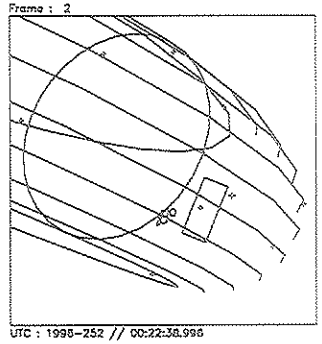

UTC : 1996-252 // 00:22:38.996
SCLK: 1/03601212:18:1:6

Frame : 3

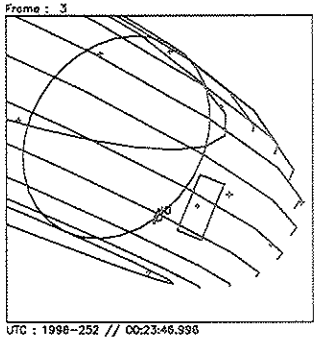

UTC : 1996-252 // 00:23:46.996
SCLK: 1/03601213:29:1:6

Frame : 4

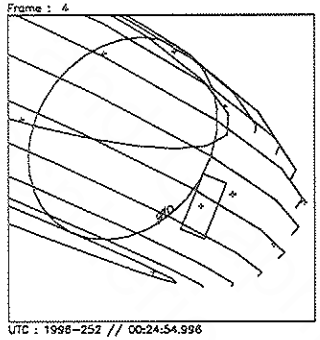

UTC : 1996-252 // 00:24:54.996
SCLK: 1/03601214:40:1:6

Frame : 5

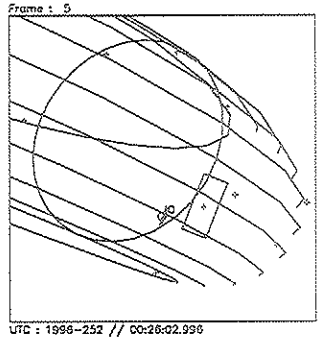

UTC : 1996-252 // 00:26:02.996
SCLK: 1/03601215:51:1:6

Frame : 6

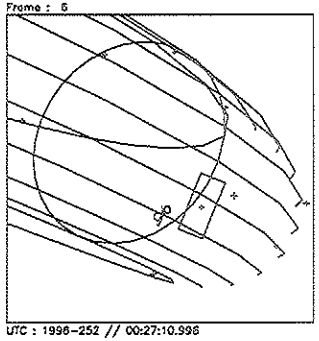

UTC : 1996-252 // 00:27:10.996
SCLK: 1/03601216:62:1:6

Frame : 7

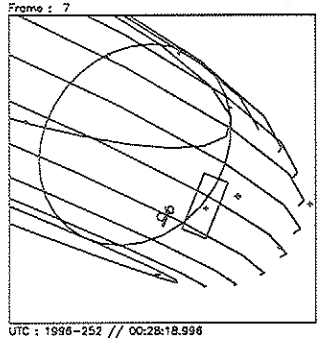

UTC : 1996-252 // 00:28:18.996
SCLK: 1/03601217:73:1:6

packet @ 00:29:21

Frame : 8

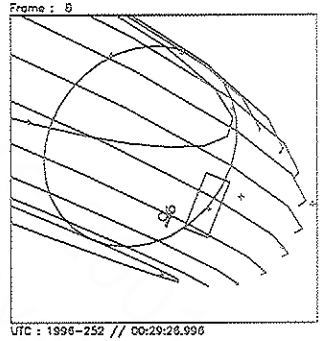

UTC : 1996-252 // 00:29:26.996
SCLK: 1/03601218:84:1:6

Start UTC_TIME : 1996-252 // 00:20:23.000
No End Time :
Start SCLK : 1/03601209:87:1:6

Target Body : JUPITER
Target Ra/Dec : 21.40/ 10.32 Deg
S/C to Body Center : 882492.8 Km (12.343937 Rj)
Z-axis Pointing (Ra / Dec) : 98.60 / 25.00 Deg